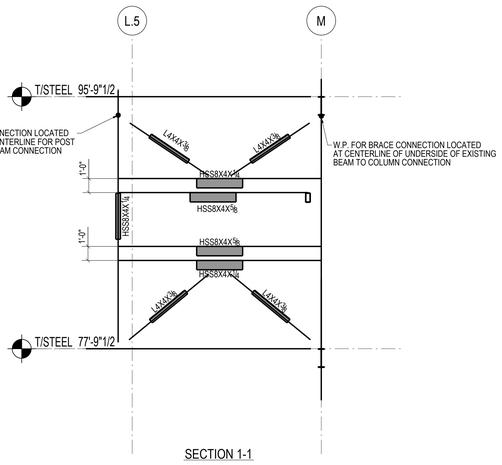

SECTION 1-1

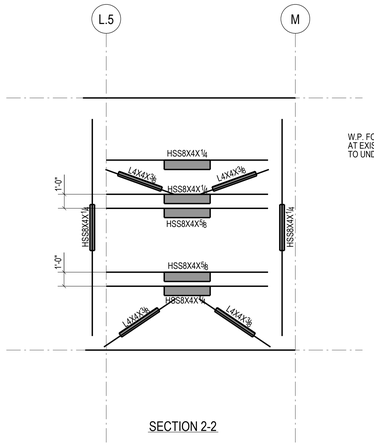

SECTION 2-2

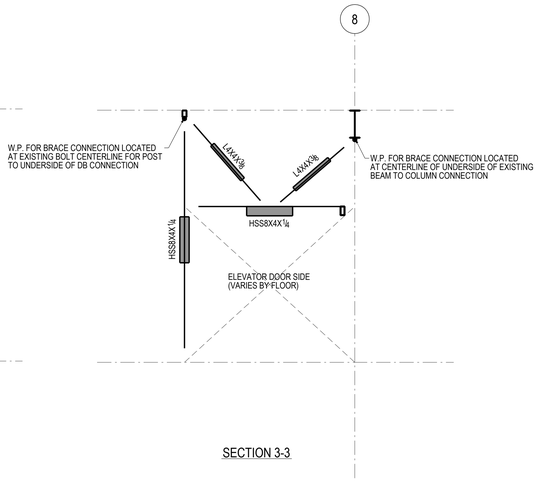

SECTION 3-3

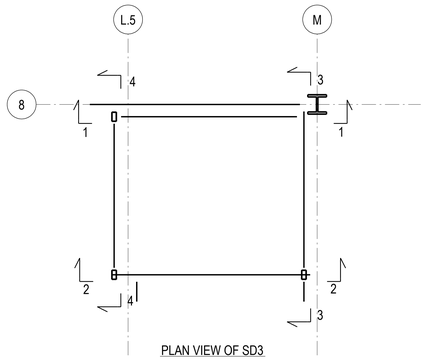

PLAN VIEW OF SD3

NOTES:

1. STEEL IS SHOWN FOR A TYPICAL FLOOR. THIS STEEL LAYOUT APPLIES TO THE FULL HEIGHT OF THE ELEVATOR (LEVEL 1 TO UNDERSIDE OF LEVEL 9).

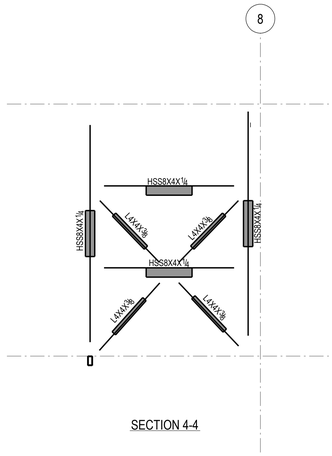

SECTION 4-4

1 SD3 (DISPLAY GROUP AJ 307) ELEVATOR ELEVATION

Damian Titus
Buildings
APPROVED
Under Directive 2 of 1975
AMENDED APPLICATION
Date: 05/03/2017
NYC Development Hub

0 8" 16" 32"

HUDSON YARDS - RETAIL PODIUM AND TOWER A

500 WEST 33RD STREET
New York, NY

Client
Related Companies
60 Columbus Circle
New York, NY 10023
TEL: 212.801.1000 FAX: 212.801.1048

Oxford Properties Group
320 Park Avenue, 17th Floor
New York, NY 10022
TEL: 212.986.7514 FAX: 212.986.7510

Architect
Kohn Pedersen Fox Associates
11 West 42nd Street
New York, New York 10036
TEL: 212.977.6500 FAX: 212.956.2526

Structural Engineer
Thornton Tomasetti, Inc.
51 Madison Avenue
New York, New York 10010
TEL: 917.661.7800 FAX: 718.661.7801

Mechanical, Electrical, Plumbing, Fire Protection
Jaros Baum & Bolles Consulting Engineers
80 Pine Street
New York, NY 10013
TEL: 212.530.9300 FAX: 212.269.5894

Retail Interior Design & Planning
Elkus-Manfredi
300 A Street
Boston, MA 02210
TEL: 617.426.1300

No.	Description	Date
1	D.O.B AMENDMENT #2	10/15/2016

Key Plan

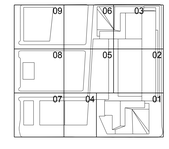

Issue Date 10/15/2016
Project No. N11328.00
Drawn By:
Sheet Number

HYE-TA-S2-4070
Drawing Title

RETAIL ELEVATOR ELEVATIONS

Drawing Number
S2-4070
B-Scan Drawing Number
S-433.00

© 2013 KOHN PEDERSEN FOX ASSOCIATES PC. All rights reserved.

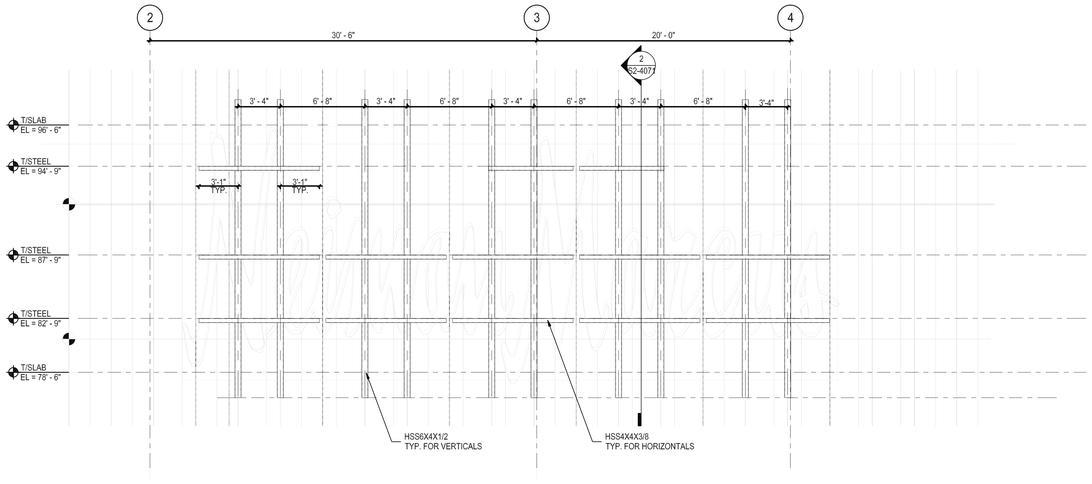

1 OVERALL RETAIL PODIUM - EAST ELEVATION
SCALE: 1" = 1'-0"

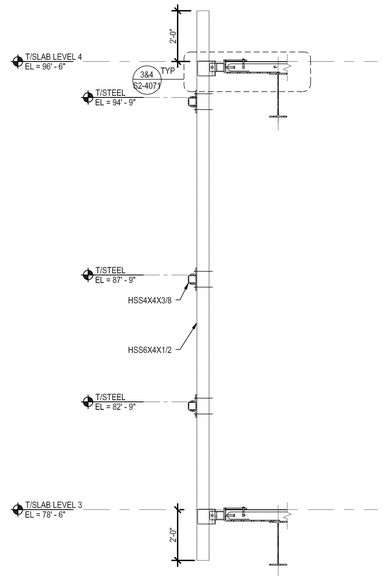

2 REINFORCEMENT PLATE
SCALE: 1/2" = 1'-0"

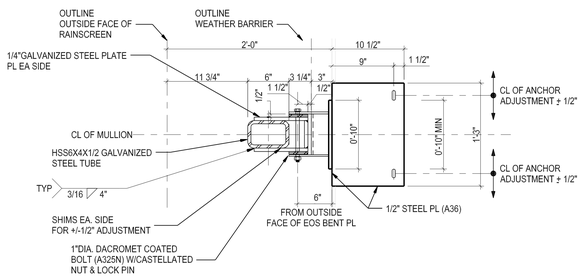

3 BRACKET DETAIL - PLAN VIEW
SCALE: 1 1/2" = 1'-0"

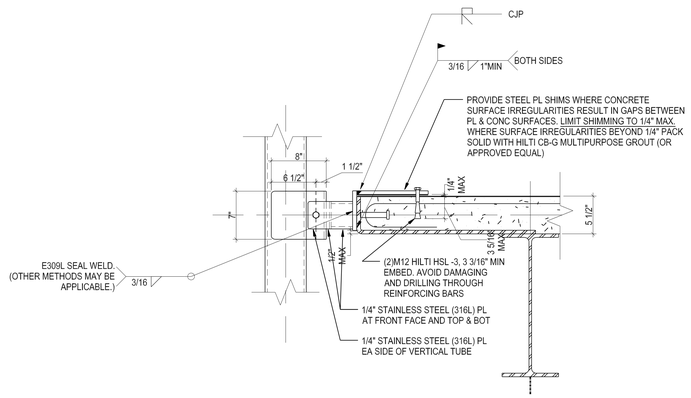

4 BRACKET DETAIL - ELEVATION VIEW
SCALE: 1 1/2" = 1'-0"

Damian Titus
Buildings
APPROVED
Under Directive 2 of 1975
AMENDED APPLICATION
Date: 05/03/2017
NYC Development Hub

HUDSON YARDS - RETAIL PODIUM AND TOWER A
500 WEST 33RD STREET
New York, NY

Client
Related Companies
60 Columbus Circle
New York, NY 10023
TEL: 212.801.1000 FAX: 212.801.1048

Oxford Properties Group
320 Park Avenue, 17th Floor
New York, NY 10022
TEL: 212.986.7514 FAX: 212.986.7510

Architect
Kohn Pedersen Fox Associates
11 West 42nd Street
New York, New York 10036
TEL: 212.977.6500 FAX: 212.956.2526

Structural Engineer
Thornton Tomasetti, Inc.
51 Madison Avenue
New York, New York 10010
TEL: 917.661.7800 FAX: 718.661.7801

Mechanical, Electrical, Plumbing, Fire Protection
Jaros Baum & Bolles Consulting Engineers
80 Pine Street
New York, NY 10013
TEL: 212.530.9300 FAX: 212.269.5894

Retail Interior Design & Planning
Elkus-Manfredi
300 A Street
Boston, MA 02210
TEL: 617.426.1300

No.	Description	Date
1	D.O.B AMENDMENT #2	10/15/2016

Key Plan

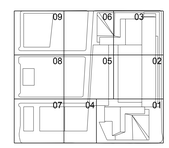

Issue Date 10/15/2016
Project No. N11328.00
Drawn By:
Sheet Number

HYE-TA-S2-4071
Drawing Title

NEIMAN MARCUS
FACADE DETAILS

Drawing Number
S2-4071
B-Scan Drawing Number
S-434.00
SHEET 219 OF 443

© 2013 KOHN PEDERSEN FOX ASSOCIATES PC. All rights reserved.

GENERAL BRACED FRAME NOTES:

1. REFER TO PLANS FOR TOP STEEL ELEVATIONS AND FOR GRIDLINE DIMENSIONS
2. ALL FORCES (KIPS) ARE FACTORED AND ARE TO BE CONSIDERED FULLY REVERSIBLE UNLESS OTHERWISE NOTED AS FOLLOWS

   +XXX INDICATES TENSION ONLY
   -XXX INDICATES COMPRESSION ONLY
3. IF NOT INDICATED, DESIGN BRACE FRAME BEAM TO COLUMN CONNECTIONS FOR A MINIMUM TRANSFER FORCE OF:

   BRACED FRAME INTERNAL CONNECTIONS:
   200 KIPS TYP.

   BEAMS FRAMING TO COLUMNS OPPOSITE BRACED FRAME:
   125 KIPS FLOORS 25-TOP
   200 KIPS @ FLOORS 1-25
4. SEE TYPICAL BRACE CONNECTION DETAILS
5. ALL BRACE AND BEAM MEMBERS ARE ORIENTED WEB VERTICAL UNLESS OTHERWISE NOTED ON ELEVATION AS FOLLOWS:

   (H) INDICATES MEMBER WITH WEB ORIENTED HORIZONTAL
6. SEE PLAN FOR COLUMN ORIENTATION
7. SEE STEEL COLUMN SCHEDULE FOR COLUMN SIZE
8. SEE STEEL BEAM LEGEND ON FRAMING PLAN FOR KEY TO BEAM DATA AND FORCES NOT SHOWN
9. ALL BRACED FRAME LINE DIAGRAMS DENOTE CENTERLINES FOR BEAMS AND COLUMNS AND WORKING LINES FOR BRACES (SEE BRACE DETAILS)
10. MINIMIZE UNBRACED LENGTH OF GUSSET AT BRACE TO GUSSET CONNECTIONS

LEGEND:

TFXX INDICATES FACTORED AXIAL FORCE TRANSFERRED THROUGH THE CONNECTION JOINT INTO THE FAR MEMBER IN KIPS

TSXX INDICATES FACTORED AXIAL TENSION COLUMN SPLICE FORCE IN KIPS SEE TENSION/MOMENT COLUMN SPLICE DETAIL

VXX INDICATES FACTORED SHEAR FORCE IN BRACED FRAME BEAMS

TYPICAL BRACED FRAME NOTES

NOT TO SCALE

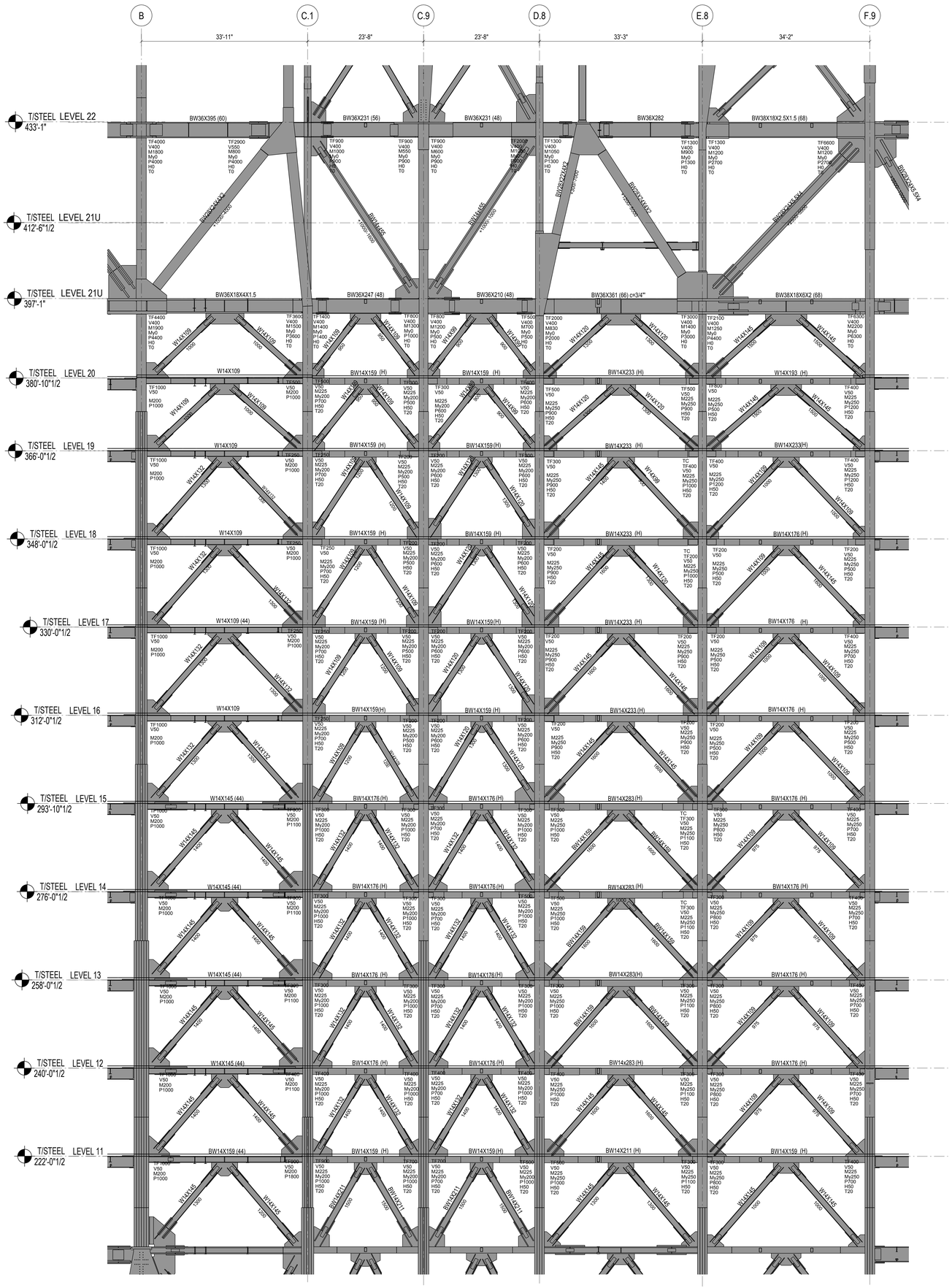

1 BRACING ELEVATION AT GRID LINE 17.0 BETWEEN LEVELS 10 AND 21
1/8" = 1'-0"

Damian Titus
BuildingsNYC
APPROVED
Under Directive 2 of 1975
MUNICIPAL REGULATION
Date: 05/03/2017
NYC Development Hub

0 4' 8' 16'

HUDSON YARDS - RETAIL PODIUM AND TOWER A

500 WEST 33RD STREET
New York, NY

Client
Related Companies
60 Columbus Circle
New York, NY 10023
TEL: 212.801.1000 FAX: 212.801.1048

Oxford Properties Group
320 Park Avenue, 17th Floor
New York, NY 10022
TEL: 212.986.7514 FAX: 212.986.7510

Architect
Kohn Pedersen Fox Associates
11 West 42nd Street
New York, New York 10036
TEL: 212.977.6500 FAX: 212.956.2526

Structural Engineer
Thornton Tomasetti, Inc.
51 Madison Avenue
New York, New York 10010
TEL: 917.661.7800 FAX: 718.661.7801

Mechanical, Electrical, Plumbing, Fire Protection
Jaros Baum & Bolles Consulting Engineers
80 Pine Street
New York, NY 10013
TEL: 212.530.9300 FAX: 212.269.5894

Retail Interior Design & Planning
Elkus-Manfredi
300 A Street
Boston, MA 02210
TEL: 617.426.1300

No.	Description	Date
2	D.O.B AMENDMENT #2	10/15/2016
1	D.O.B BUILDING PERMIT FILING	12/10/2014

Key Plan

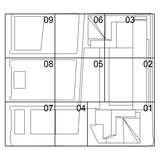

Issue Date 12/10/2014
Project No. N11328.00
Drawn By
Sheet Number

STATE OF NEW YORK — DANIEL E. DOYLE — LICENSED PROFESSIONAL ENGINEER

HYE-TA-S2-5010
Drawing Title

EAST WEST BRACING BETWEEN LVL 10-21 AT GRID LINE 17

Drawing Number
S2-4010
Revision Drawing Number
S-450.01

SHEET 220 OF 443

© 2013 KOHN PEDERSEN FOX ASSOCIATES PC. All rights reserved.

GENERAL BRACED FRAME NOTES:

1. REFER TO PLANS FOR TOP STEEL ELEVATIONS AND FOR GRIDLINE DIMENSIONS
2. ALL FORCES (KIPS) ARE FACTORED AND ARE TO BE CONSIDERED FULLY REVERSIBLE UNLESS OTHERWISE NOTED AS FOLLOWS

   +XXX INDICATES TENSION ONLY
   -XXX INDICATES COMPRESSION ONLY
3. IF NOT INDICATED, DESIGN BRACE FRAME BEAM TO COLUMN CONNECTIONS FOR A MINIMUM TRANSFER FORCE OF:

   BRACED FRAME INTERNAL CONNECTIONS:
   200 KIPS TYP.

   BEAMS FRAMING TO COLUMNS OPPOSITE BRACED FRAME:
   125 KIPS FLOORS 25-TOP
   200 KIPS @ FLOORS 1-25
4. SEE TYPICAL BRACE CONNECTION DETAILS
5. ALL BRACE AND BEAM MEMBERS ARE ORIENTED WEB VERTICAL UNLESS OTHERWISE NOTED ON ELEVATION AS FOLLOWS:

   (H) INDICATES MEMBER WITH WEB ORIENTED HORIZONTAL
6. SEE PLAN FOR COLUMN ORIENTATION
7. SEE STEEL COLUMN SCHEDULE FOR COLUMN SIZE
8. SEE STEEL BEAM LEGEND ON FRAMING PLAN FOR KEY TO BEAM DATA AND FORCES NOT SHOWN
9. ALL BRACED FRAME LINE DIAGRAMS DENOTE CENTERLINES FOR BEAMS AND COLUMNS AND WORKING LINES FOR BRACES (SEE BRACE DETAILS)
10. MINIMIZE UNBRACED LENGTH OF GUSSET AT BRACE TO GUSSET CONNECTIONS

LEGEND:

TFXX INDICATES FACTORED AXIAL FORCE TRANSFERRED THROUGH THE CONNECTION JOINT INTO THE FAR MEMBER IN KIPS

TSXX INDICATES FACTORED AXIAL TENSION COLUMN SPLICE FORCE IN KIPS SEE TENSION/MOMENT COLUMN SPLICE DETAIL

VXX INDICATES FACTORED SHEAR FORCE IN BRACED FRAME BEAMS

TYPICAL BRACED FRAME NOTES
NOT TO SCALE

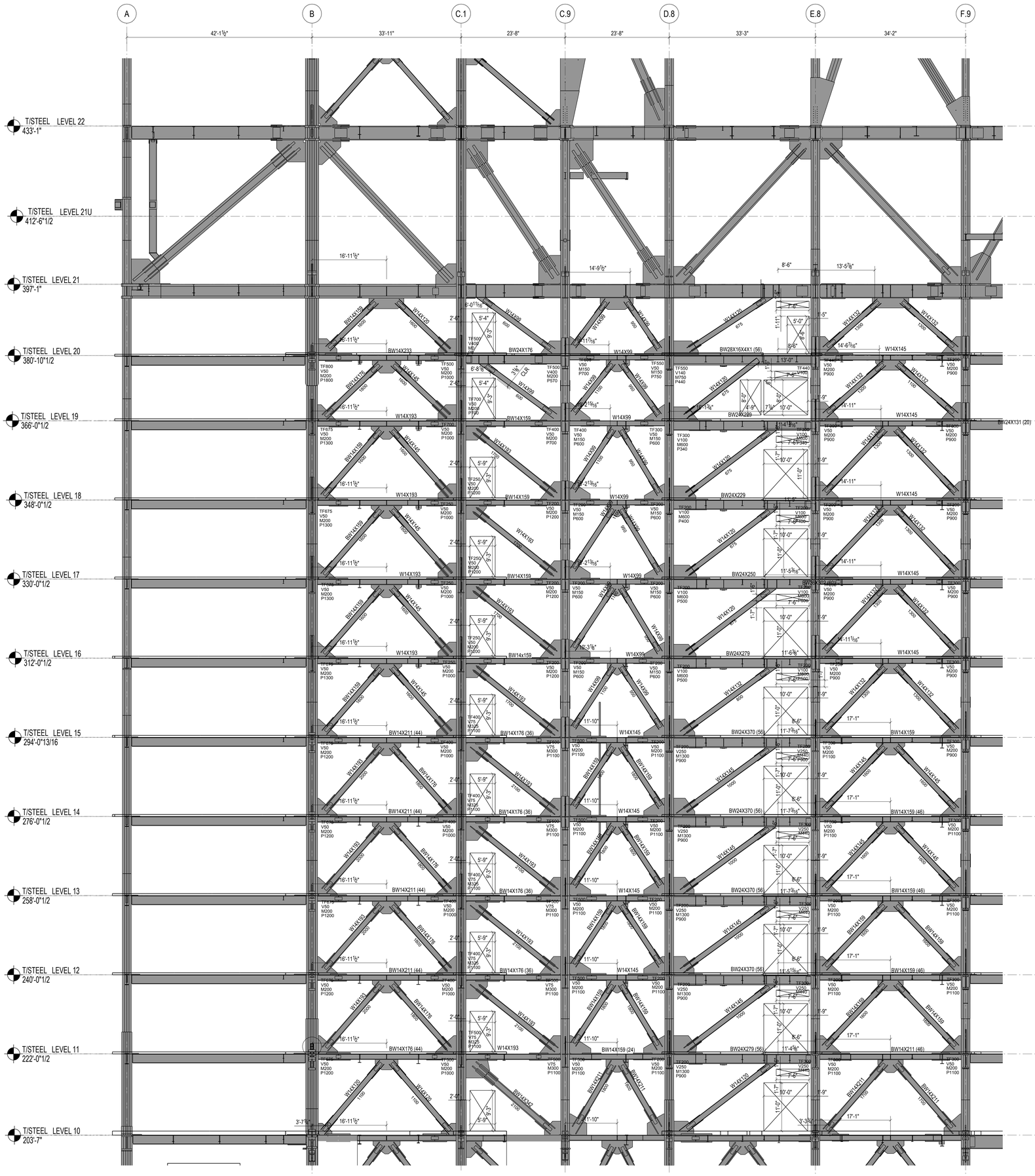

1 BRACING ELEVATION AT GRID LINE 16.0 BETWEEN LEVELS 10 AND 21
3/8" = 1'-0"

0 4' 8' 16'

HUDSON YARDS - RETAIL PODIUM AND TOWER A
500 WEST 33RD STREET
New York, NY

Client
Related Companies
60 Columbus Circle
New York, NY 10023
TEL: 212.801.1000 FAX: 212.801.1048

Oxford Properties Group
320 Park Avenue, 17th Floor
New York, NY 10022
TEL: 212.986.7514 FAX: 212.986.7510

Architect
Kohn Pedersen Fox Associates
11 West 42nd Street
New York, New York 10036
TEL: 212.977.6500 FAX: 212.956.2526

Structural Engineer
Thornton Tomasetti, Inc.
51 Madison Avenue
New York, New York 10010
TEL: 917.661.7800 FAX: 718.661.7801

Mechanical, Electrical, Plumbing, Fire Protection
Jaros Baum & Bolles Consulting Engineers
80 Pine Street
New York, NY 10013
TEL: 212.530.9300 FAX: 212.269.5894

Retail Interior Design & Planning
Elkus-Manfredi
300 A Street
Boston, MA 02210
TEL: 617.426.1300

No.	Description	Date
2	D.O.B AMENDMENT #2	10/15/2016
1	D.O.B BUILDING PERMIT FILING	12/10/2014

Key Plan

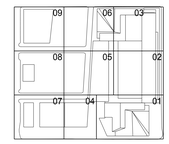

Issue Date 12/10/2014
Project No. N11328.00
Drawn By:
Sheet Number

HYE-TA-S2-5011
Drawing Title

EAST WEST BRACING BETWEEN LVL 10-21 AT GRID LINE 16

Drawing Number
S2-5011
S-Num Drawing Number
S-451.01

SHEET 221 OF 443

Damian Titus
Buildings
APPROVED
Under Directive 1 of 1975
AMENDED APPLICATION
Date: 05/03/2017
NYC Development Hub

© 2013 KOHN PEDERSEN FOX ASSOCIATES PC. All rights reserved.

CERTIFICATE NUMBER: 21EB0523 BIN Number
B3B0430519 Bar Code

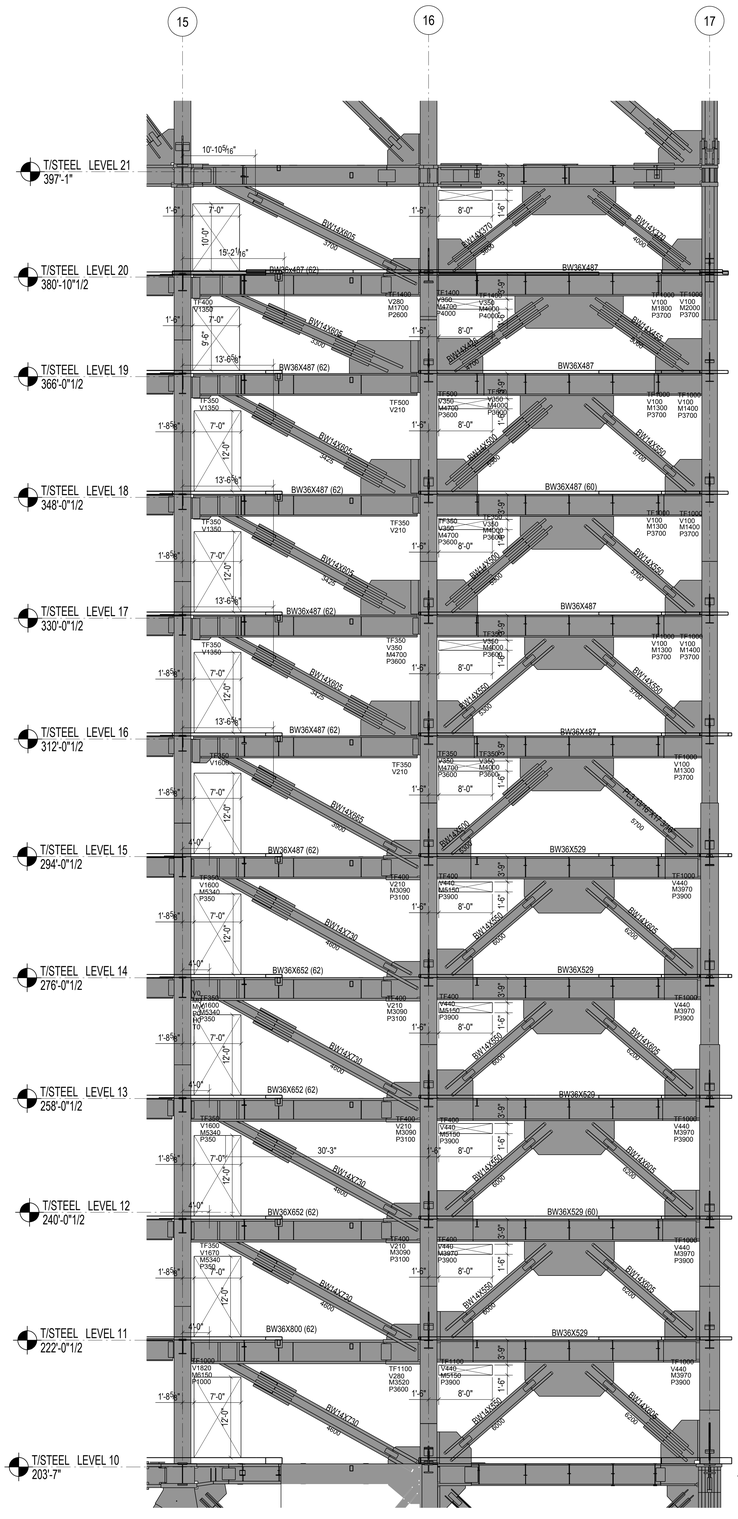

1 BRACING ELEVATION AT GRID LINE B.0 BETWEEN LEVELS 10 AND 21
1/8" = 1'-0"

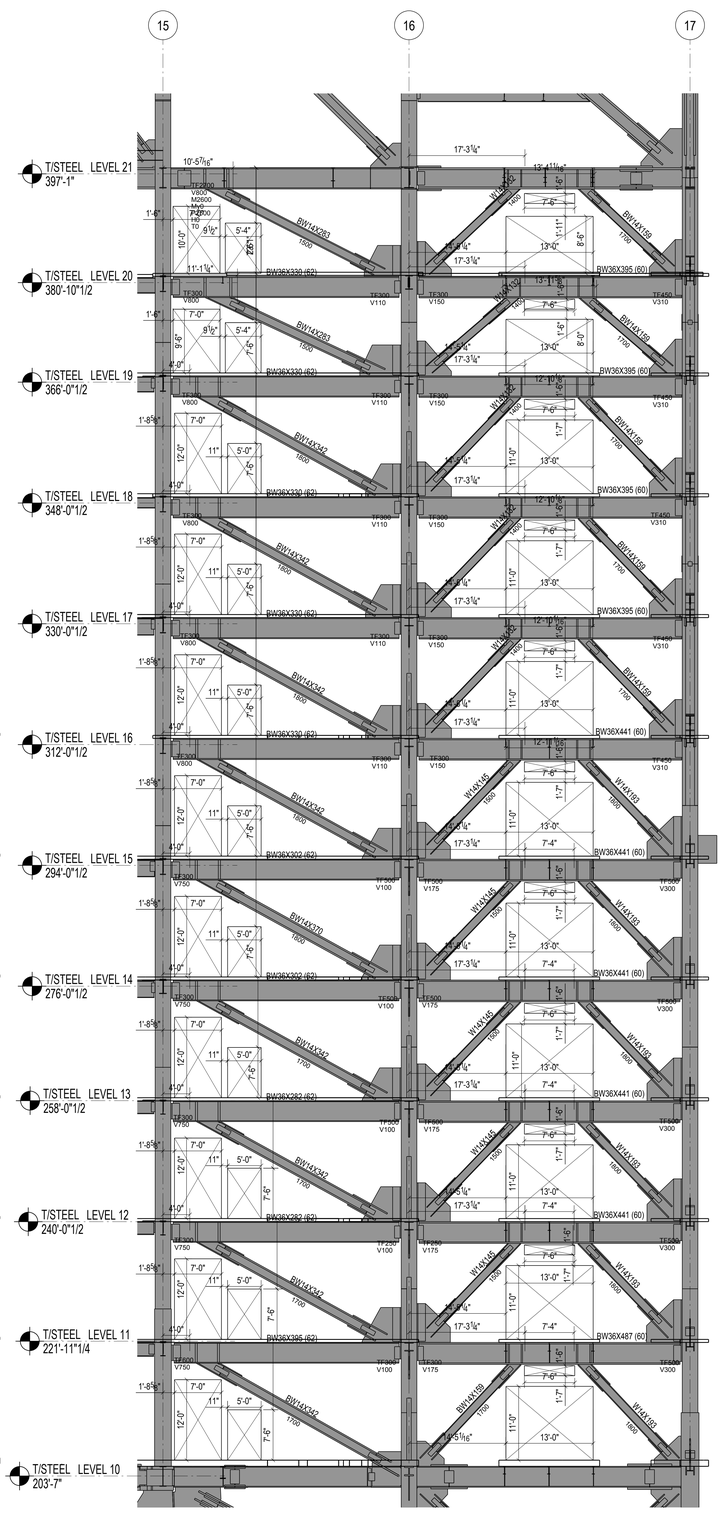

2 BRACING ELEVATION AT GRID LINE C.1 BETWEEN LEVELS 10 AND 21
1/8" = 1'-0"

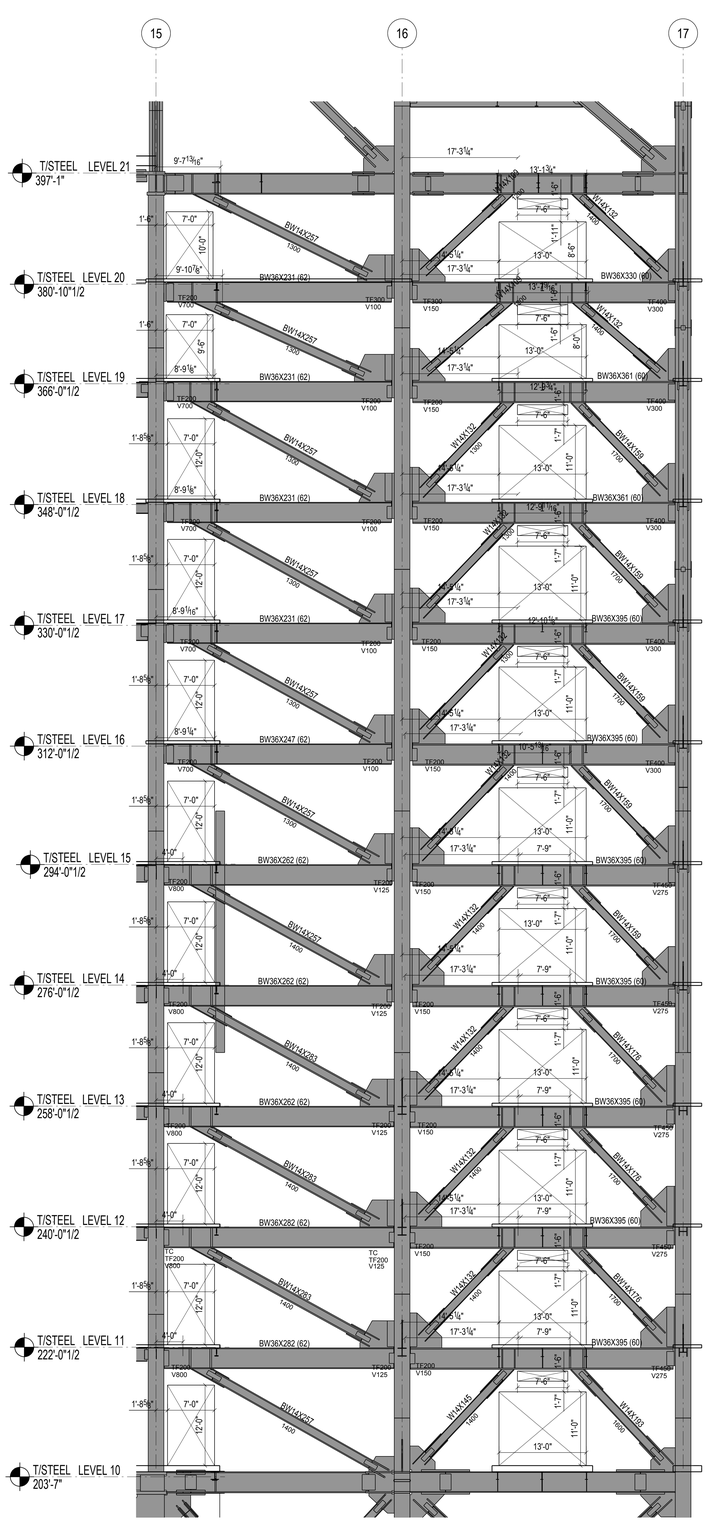

3 BRACING ELEVATION AT GRID LINE C.9 BETWEEN LEVELS 10 AND 21
1/8" = 1'-0"

GENERAL BRACED FRAME NOTES:

1. REFER TO PLANS FOR TOP STEEL ELEVATIONS AND FOR GRIDLINE DIMENSIONS
2. ALL FORCES (KIPS) ARE FACTORED AND ARE TO BE CONSIDERED FULLY REVERSIBLE UNLESS OTHERWISE NOTED AS FOLLOWS

   +XXX INDICATES TENSION ONLY
   -XXX INDICATES COMPRESSION ONLY
3. IF NOT INDICATED, DESIGN BRACE FRAME BEAM TO COLUMN CONNECTIONS FOR A MINIMUM TRANSFER FORCE OF:

   BRACED FRAME INTERNAL CONNECTIONS:
   200 KIPS TYP.

   BEAMS FRAMING TO COLUMNS OPPOSITE BRACED FRAME:
   125 KIPS FLOORS 26-TOP
   200 KIPS @ FLOORS 1-25
4. SEE TYPICAL BRACE CONNECTION DETAILS
5. ALL BRACE AND BEAM MEMBERS ARE ORIENTED WEB VERTICAL UNLESS OTHERWISE NOTED ON ELEVATION AS FOLLOWS:

   (H) INDICATES MEMBER WITH WEB ORIENTED HORIZONTAL
6. SEE PLAN FOR COLUMN ORIENTATION
7. SEE STEEL COLUMN SCHEDULE FOR COLUMN SIZE
8. SEE STEEL BEAM LEGEND ON FRAMING PLAN FOR KEY TO BEAM DATA AND FORCES NOT SHOWN
9. ALL BRACED FRAME LINE DIAGRAMS DENOTE CENTERLINES FOR BEAMS AND COLUMNS AND WORKING LINES FOR BRACES (SEE BRACE DETAILS)
10. MINIMIZE UNBRACED LENGTH OF GUSSET AT BRACE TO GUSSET CONNECTIONS

LEGEND:

TFXX INDICATES FACTORED AXIAL FORCE TRANSFERRED THROUGH THE CONNECTION JOINT INTO THE FAR MEMBER IN KIPS

TSXX INDICATES FACTORED AXIAL TENSION COLUMN SPLICE FORCE IN KIPS SEE TENSION/MOMENT COLUMN SPLICE DETAIL

VXX INDICATES FACTORED SHEAR FORCE IN BRACED FRAME BEAMS

MSXX INDICATES FACTORED MOMENT AT COLUMN SPLICE IN KIP-FT MOMENT ACTS ABOUT COLUMN STRONG AXIS UON SEE TENSION/MOMENT COLUMN SPLICE DETAIL

VSXX INDICATES FACTORED SHEAR AT COLUMN SPLICE IN KIPS SHEAR ACTS PARALLEL TO MOMENT FRAME UON

TYPICAL BRACED FRAME NOTES
NOT TO SCALE

0 4' 8' 16'

HUDSON YARDS - RETAIL PODIUM AND TOWER A
500 WEST 33RD STREET
New York, NY

Client
Related Companies
60 Columbus Circle
New York, NY 10023
TEL: 212.801.1000 FAX: 212.801.1048

Oxford Properties Group
320 Park Avenue, 17th Floor
New York, NY 10022
TEL: 212.986.7514 FAX: 212.986.7510

Architect
Kohn Pedersen Fox Associates
11 West 42nd Street
New York, New York 10036
TEL: 212.977.6500 FAX: 212.956.2526

Structural Engineer
Thornton Tomasetti, Inc.
51 Madison Avenue
New York, New York 10010
TEL: 917.661.7800 FAX: 718.661.7801

Mechanical, Electrical, Plumbing, Fire Protection
Jaros Baum & Bolles Consulting Engineers
80 Pine Street
New York, NY 10013
TEL: 212.530.9300 FAX: 212.269.5894

Retail Interior Design & Planning
Elkus-Manfredi
300 A Street
Boston, MA 02210
TEL: 617.426.1300

No.	Description	Date
2	D.O.B AMENDMENT #2	10/15/2016
1	D.O.B BUILDING PERMIT FILING	12/10/2014

Key Plan

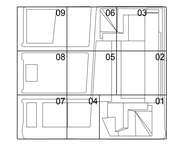

Issue Date 12/10/2014
Project No. N11328.00
Drawn By
Sheet Number

Damian Titus
Buildings
APPROVED
Under Directive 2 of 1975
EXTENSION OF OPERATION
Date: 09/03/2017
NYC Development Hub

HYE-TA-S2-5012
Drawing Title

NORTH SOUTH BRACING BETWEEN LVL 10-21 AT GRID LINE B.0, C.1 & C.9

Drawing Number
S2-5012
Revision Drawing Number
S-452.01

© 2013 KOHN PEDERSEN FOX ASSOCIATES PC. All rights reserved.

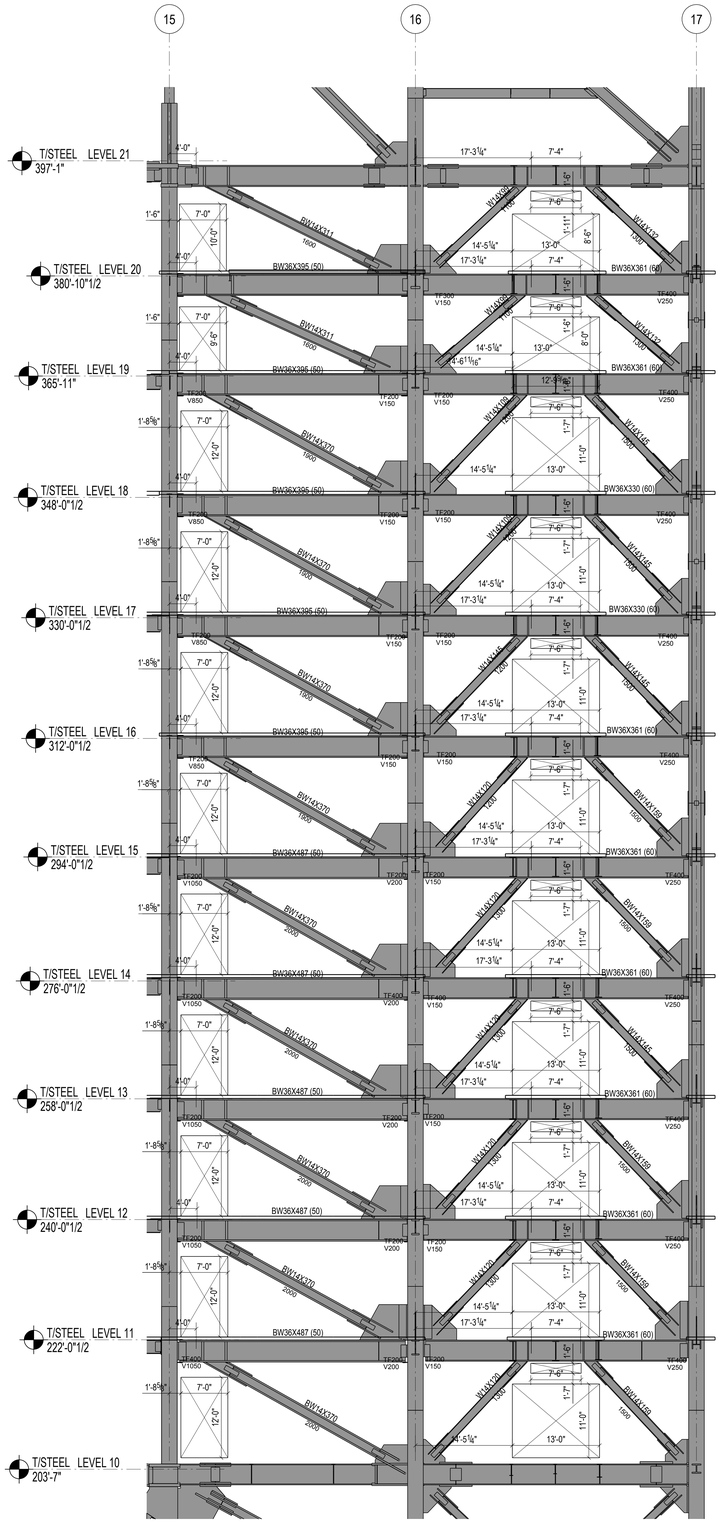

1 BRACING ELEVATION AT GRIDLINE D.8 BETWEEN LEVELS 10 AND 21
3/8" = 1'-0"

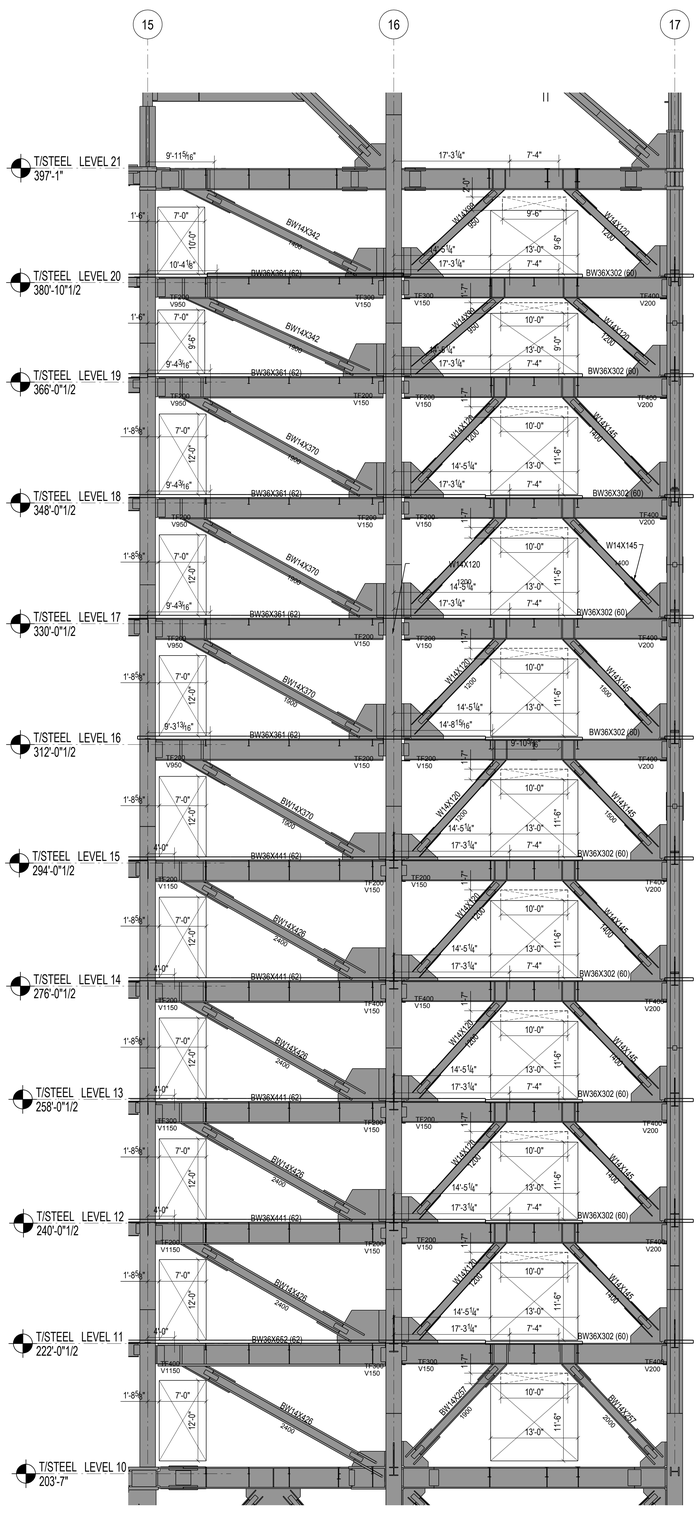

2 BRACING ELEVATION AT GRIDLINE E.8 BETWEEN LEVELS 10 AND 21
3/8" = 1'-0"

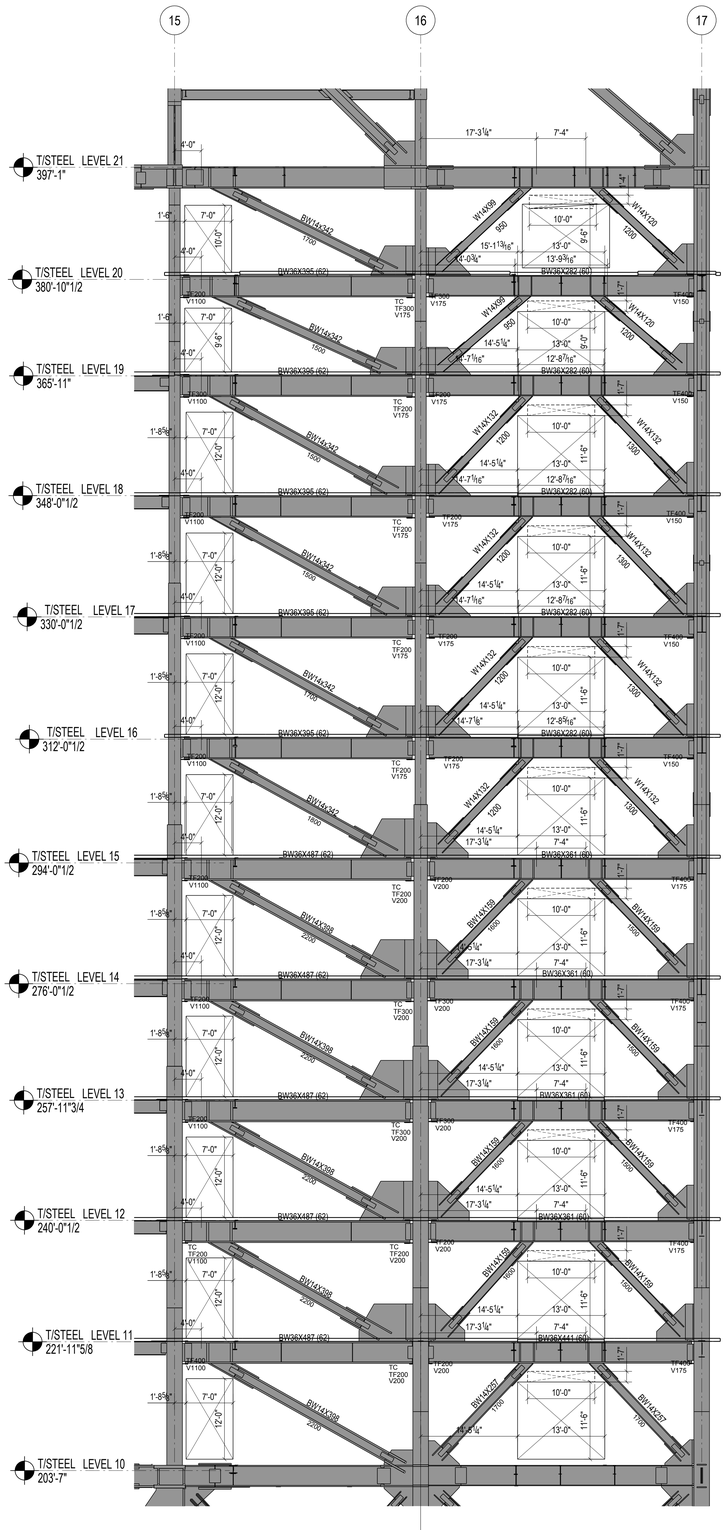

3 BRACING ELEVATION AT GRIDLINE F.9 BETWEEN LEVELS 10 AND 21
3/8" = 1'-0"

GENERAL BRACED FRAME NOTES:

1. REFER TO PLANS FOR TOP STEEL ELEVATIONS AND FOR GRIDLINE DIMENSIONS
2. ALL FORCES (KIPS) ARE FACTORED AND ARE TO BE CONSIDERED FULLY REVERSIBLE UNLESS OTHERWISE NOTED AS FOLLOWS

   +XXX INDICATES TENSION ONLY
   -XXX INDICATES COMPRESSION ONLY
3. IF NOT INDICATED, DESIGN BRACE FRAME BEAM TO COLUMN CONNECTIONS FOR A MINIMUM TRANSFER FORCE OF:

   BRACED FRAME INTERNAL CONNECTIONS:

   200 KIPS TYP.

   BEAMS FRAMING TO COLUMNS OPPOSITE BRACED FRAME:

   125 KIPS FLOORS 25-TOP
   200 KIPS @ FLOORS 1-25
4. SEE TYPICAL BRACE CONNECTION DETAILS
5. ALL BRACE AND BEAM MEMBERS ARE ORIENTED WEB VERTICAL UNLESS OTHERWISE NOTED ON ELEVATION AS FOLLOWS:

   (H) INDICATES MEMBER WITH WEB ORIENTED HORIZONTAL
6. SEE PLAN FOR COLUMN ORIENTATION
7. SEE STEEL COLUMN SCHEDULE FOR COLUMN SIZE
8. SEE STEEL BEAM LEGEND ON FRAMING PLAN FOR KEY TO BEAM DATA AND FORCES NOT SHOWN
9. ALL BRACED FRAME LINE DIAGRAMS DENOTE CENTERLINES FOR BEAMS AND COLUMNS AND WORKING LINES FOR BRACES (SEE BRACE DETAILS)
10. MINIMIZE UNBRACED LENGTH OF GUSSET AT BRACE TO GUSSET CONNECTIONS

LEGEND:

TFXX INDICATES FACTORED AXIAL FORCE TRANSFERRED THROUGH THE CONNECTION JOINT INTO THE FAR MEMBER IN KIPS

TSXX INDICATES FACTORED AXIAL TENSION COLUMN SPLICE FORCE IN KIPS SEE TENSION/MOMENT COLUMN SPLICE DETAIL

VXX INDICATES FACTORED SHEAR FORCE IN BRACED FRAME BEAMS

MSXX INDICATES FACTORED MOMENT AT COLUMN SPLICE IN KIP-FT MOMENT ACTS ABOUT COLUMN STRONG AXIS UON SEE TENSION/MOMENT COLUMN SPLICE DETAIL

VSXX INDICATES FACTORED SHEAR AT COLUMN SPLICE IN KIPS SHEAR ACTS PARALLEL TO MOMENT FRAME UON

TYPICAL BRACED FRAME NOTES
NOT TO SCALE

Damian Titus
Building
APPROVED
Under Directive 2 of 1975
AMENDED APPLICATION
Date: 05/01/2017
NYC Development Hub

0 4' 8' 16'

HUDSON YARDS - RETAIL PODIUM AND TOWER A
500 WEST 33RD STREET
New York, NY

Client
Related Companies
60 Columbus Circle
New York, NY 10023
TEL: 212.801.1000 FAX: 212.801.1048

Oxford Properties Group
320 Park Avenue, 17th Floor
New York, NY 10022
TEL: 212.986.7514 FAX: 212.986.7510

Architect
Kohn Pedersen Fox Associates
11 West 42nd Street
New York, New York 10036
TEL: 212.977.6500 FAX: 212.956.2526

Structural Engineer
Thornton Tomasetti, Inc.
51 Madison Avenue
New York, New York 10010
TEL: 917.661.7800 FAX: 718.661.7801

Mechanical, Electrical, Plumbing, Fire Protection
Jaros Baum & Bolles Consulting Engineers
80 Pine Street
New York, NY 10013
TEL: 212.530.9300 FAX: 212.269.5894

Retail Interior Design & Planning
Elkus-Manfredi
300 A Street
Boston, MA 02210
TEL: 617.426.1300

No.	Description	Date
2	D.O.B AMENDMENT #2	10/15/2016
1	D.O.B BUILDING PERMIT FILING	12/10/2014

Key Plan

Issue Date 12/10/2014
Project No. N11328.00
Drawn By
Sheet Number

STATE OF NEW YORK — CERTIFICATE OF AUTHORIZATION — KOHN PEDERSEN FOX ASSOCIATES P.C. — PROFESSIONAL ENGINEER

HYE-TA-S2-5013
Drawing Title

NORTH SOUTH BRACING BETWEEN LVL 10-21 AT GRIDLINES D.8, E.8, F.9

Drawing Number
S2-5013
Rikuo Drawing Number
S-453.01

SHEET 223 OF 443

© 2013 KOHN PEDERSEN FOX ASSOCIATES PC. All rights reserved.

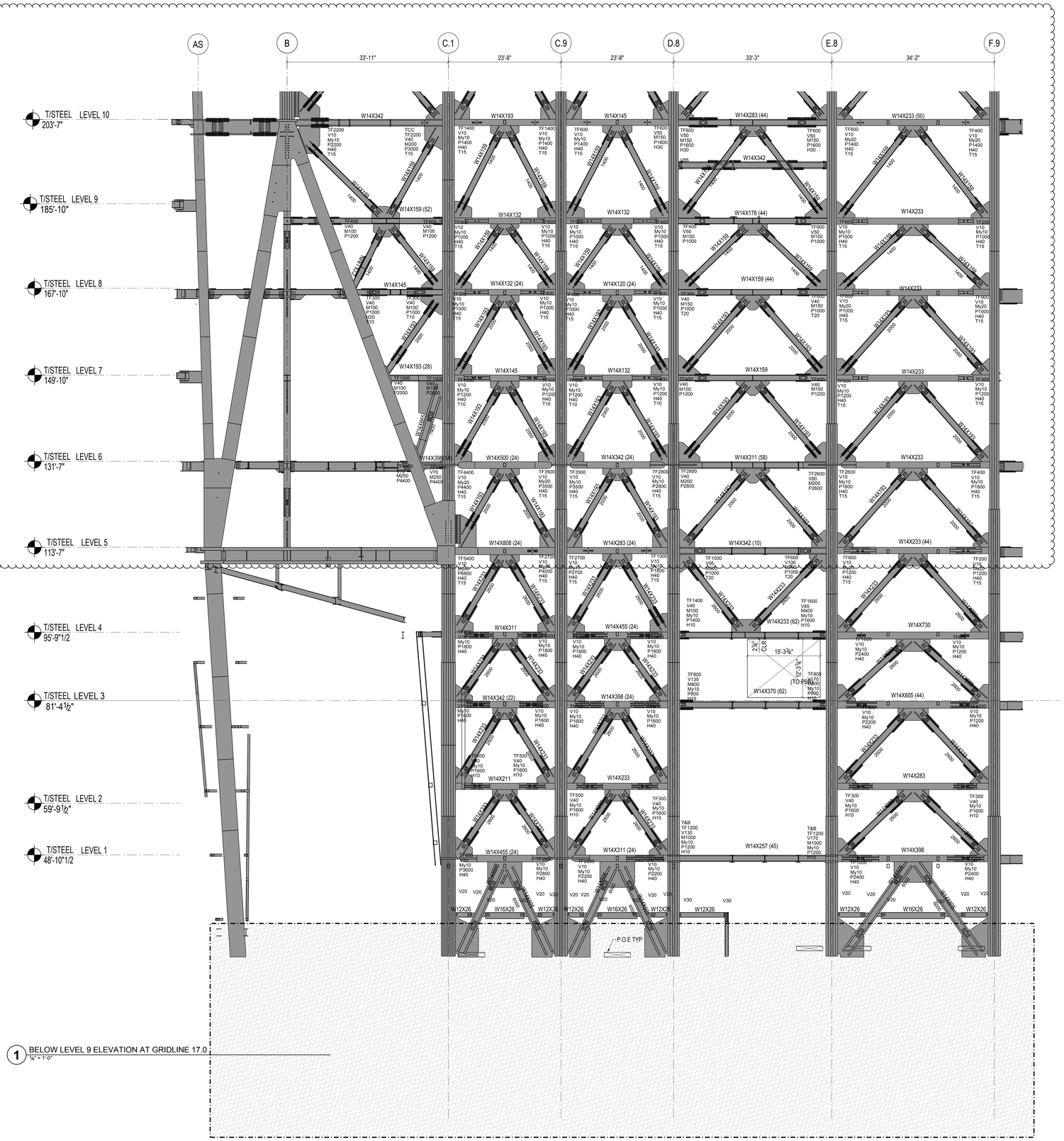

1 BELOW LEVEL 9 ELEVATION AT GRIDLINE 17.0
¼" = 1'-0"

HUDSON YARDS - RETAIL PODIUM AND TOWER A

500 WEST 33RD STREET
New York, NY

Client
Related Companies
60 Columbus Circle
New York, NY 10023
TEL: 212.801.1000 FAX: 212.801.1048

Oxford Properties Group
320 Park Avenue, 17th Floor
New York, NY 10022
TEL: 212.986.7514 FAX: 212.986.7510

Architect
Kohn Pedersen Fox Associates
11 West 42nd Street
New York, New York 10036
TEL: 212.977.6500 FAX: 212.956.2526

Structural Engineer
Thornton Tomasetti, Inc.
51 Madison Avenue
New York, New York 10010
TEL: 917.661.7800 FAX: 718.661.7801

Mechanical, Electrical, Plumbing, Fire Protection
Jaros Baum & Bolles Consulting Engineers
80 Pine Street
New York, NY 10013
TEL: 212.530.9300 FAX: 212.269.5894

Retail Interior Design & Planning
Elkus-Manfredi
300 A Street
Boston, MA 02210
TEL: 617.426.1300

No.	Description	Date
2	D.O.B AMENDMENT #2	10/15/2016
1	D.O.B BUILDING PERMIT FILING	12/10/2014

Key Plan

Damian Titus
Buildings
APPROVED
Under Directive 2 of 1975
AMENDED APPLICATION
Date: 05/03/2017
NYC Development Hub

Issue Date 12/10/2014
Project No. N11328.00
Drawn By
Sheet Number

HYE-TA-S2-5014
Drawing Title

BELOW LEVEL 9
EAST WEST
BRACING SECTION

Drawing Number
S2-5014
B-Scan Drawing Number
S-454.01

SHEET 224 OF 443

© 2013 KOHN PEDERSEN FOX ASSOCIATES PC. All rights reserved.

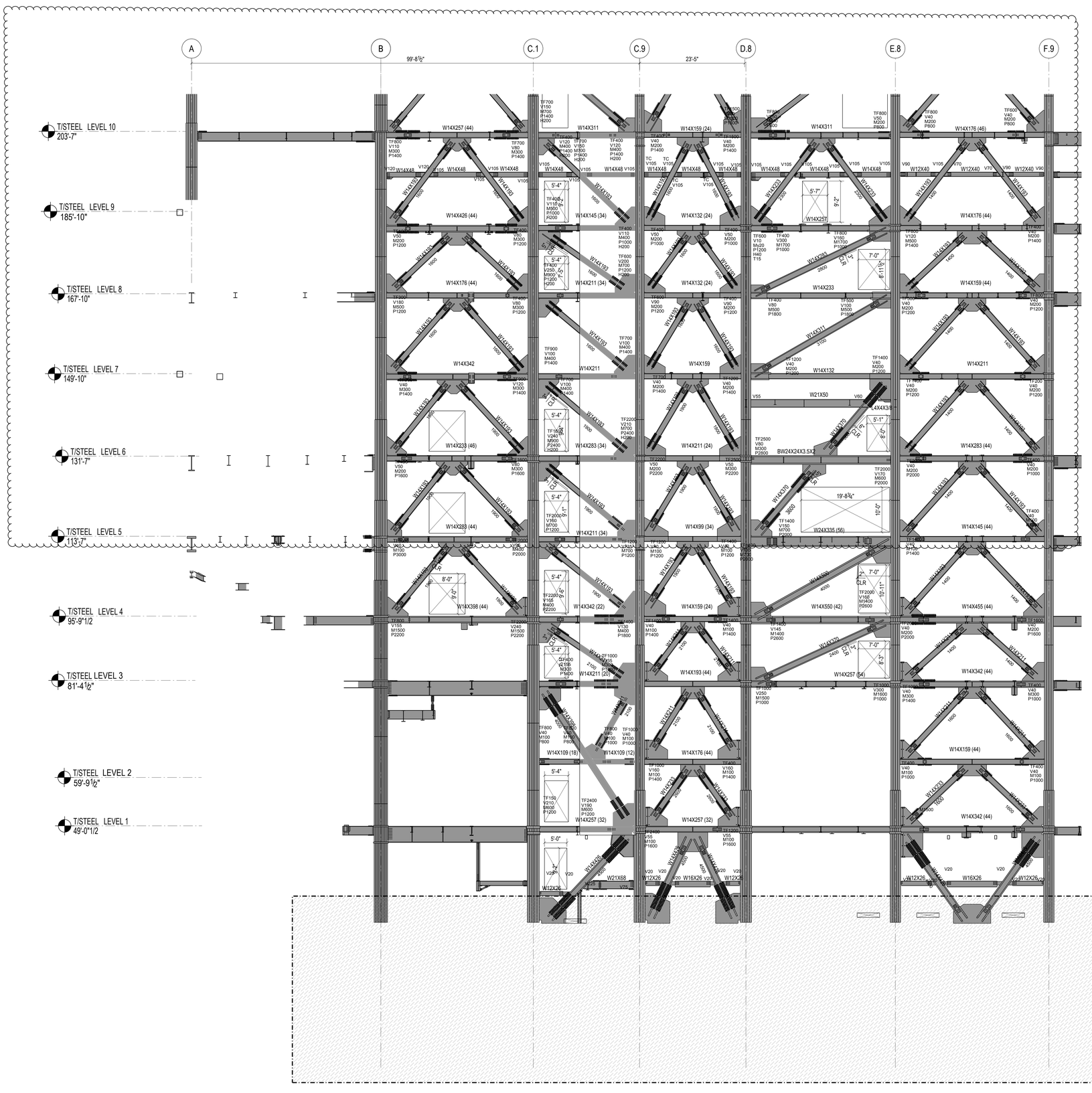

1 BELOW LEVEL 9 ELEVATION AT GRIDLINE 16.0
1/8" = 1'-0"

Damian Titus
Buildings
APPROVED
Under Directive 2 of 1975
AMENDED APPLICATION
Date: 05/01/2017
NYC Development Hub

HUDSON YARDS - RETAIL PODIUM AND TOWER A
500 WEST 33RD STREET
New York, NY

Client
Related Companies
60 Columbus Circle
New York, NY 10023
TEL: 212.801.1000 FAX: 212.801.1048

Oxford Properties Group
320 Park Avenue, 17th Floor
New York, NY 10022
TEL: 212.986.7514 FAX: 212.986.7510

Architect
Kohn Pedersen Fox Associates
11 West 42nd Street
New York, New York 10036
TEL: 212.977.6500 FAX: 212.956.2526

Structural Engineer
Thornton Tomasetti, Inc.
51 Madison Avenue
New York, New York 10010
TEL: 917.661.7800 FAX: 718.661.7801

Mechanical, Electrical, Plumbing, Fire Protection
Jaros Baum & Bolles Consulting Engineers
80 Pine Street
New York, NY 10013
TEL: 212.530.9300 FAX: 212.269.5894

Retail Interior Design & Planning
Elkus-Manfredi
300 A Street
Boston, MA 02210
TEL: 617.426.1300

No.	Description	Date
2	D.O.B AMENDMENT #2	10/15/2016
1	D.O.B BUILDING PERMIT FILING	12/10/2014

Key Plan

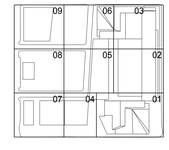

Issue Date 12/10/2014
Project No. N11328.00
Drawn By
Sheet Number

HYE-TA-S2-5015
Drawing Title

BELOW LEVEL 9
EAST WEST
BRACING SECTION

Drawing Number
S2-5015
B-Scan Drawing Number
S-455.01

© 2013 KOHN PEDERSEN FOX ASSOCIATES PC. All rights reserved.

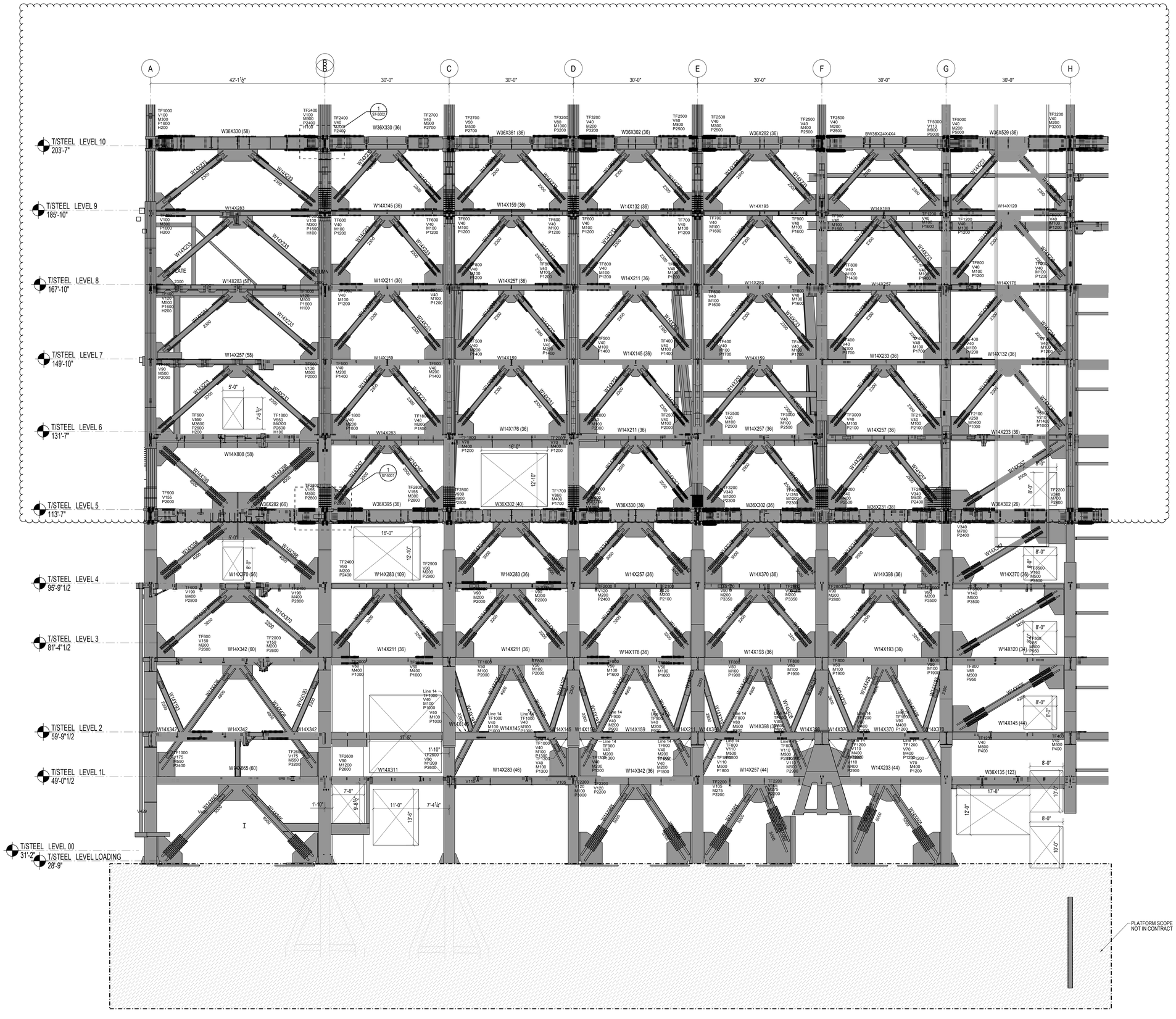

HUDSON YARDS - RETAIL PODIUM AND TOWER A

500 WEST 33RD STREET
New York, NY

Client
Related Companies
60 Columbus Circle
New York, NY 10023
TEL: 212.801.1000 FAX: 212.801.1048

Oxford Properties Group
320 Park Avenue, 17th Floor
New York, NY 10022
TEL: 212.986.7514 FAX: 212.986.7510

Architect
Kohn Pedersen Fox Associates
11 West 42nd Street
New York, New York 10036
TEL: 212.977.6500 FAX: 212.956.2526

Structural Engineer
Thornton Tomasetti, Inc.
51 Madison Avenue
New York, New York 10010
TEL: 917.661.7800 FAX: 718.661.7801

Mechanical, Electrical, Plumbing, Fire Protection
Jaros Baum & Bolles Consulting Engineers
80 Pine Street
New York, NY 10013
TEL: 212.530.9300 FAX: 212.269.5894

Retail Interior Design & Planning
Elkus-Manfredi
300 A Street
Boston, MA 02210
TEL: 617.426.1300

No.	Description	Date
2	D.O.B AMENDMENT #2	10/15/2016
1	D.O.B BUILDING PERMIT FILING	12/10/2014

Key Plan

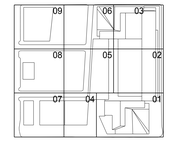

Issue Date 12/10/2014
Project No. N11328.00
Drawn By:
Sheet Number

HYE-TA-S2-5016
Drawing Title

BELOW LEVEL 9
EAST WEST
BRACING SECTION

Drawing Number
S2-5016
As-Scan Drawing Number
S-456.01

SHEET 226 OF 443

Damian Titus
Buildings
APPROVED
Under Directive 2 of 1975
AMENDED APPLICATION
Date: 05/03/2017
NYC Development Hub

© 2013 KOHN PEDERSEN FOX ASSOCIATES PC. All rights reserved.

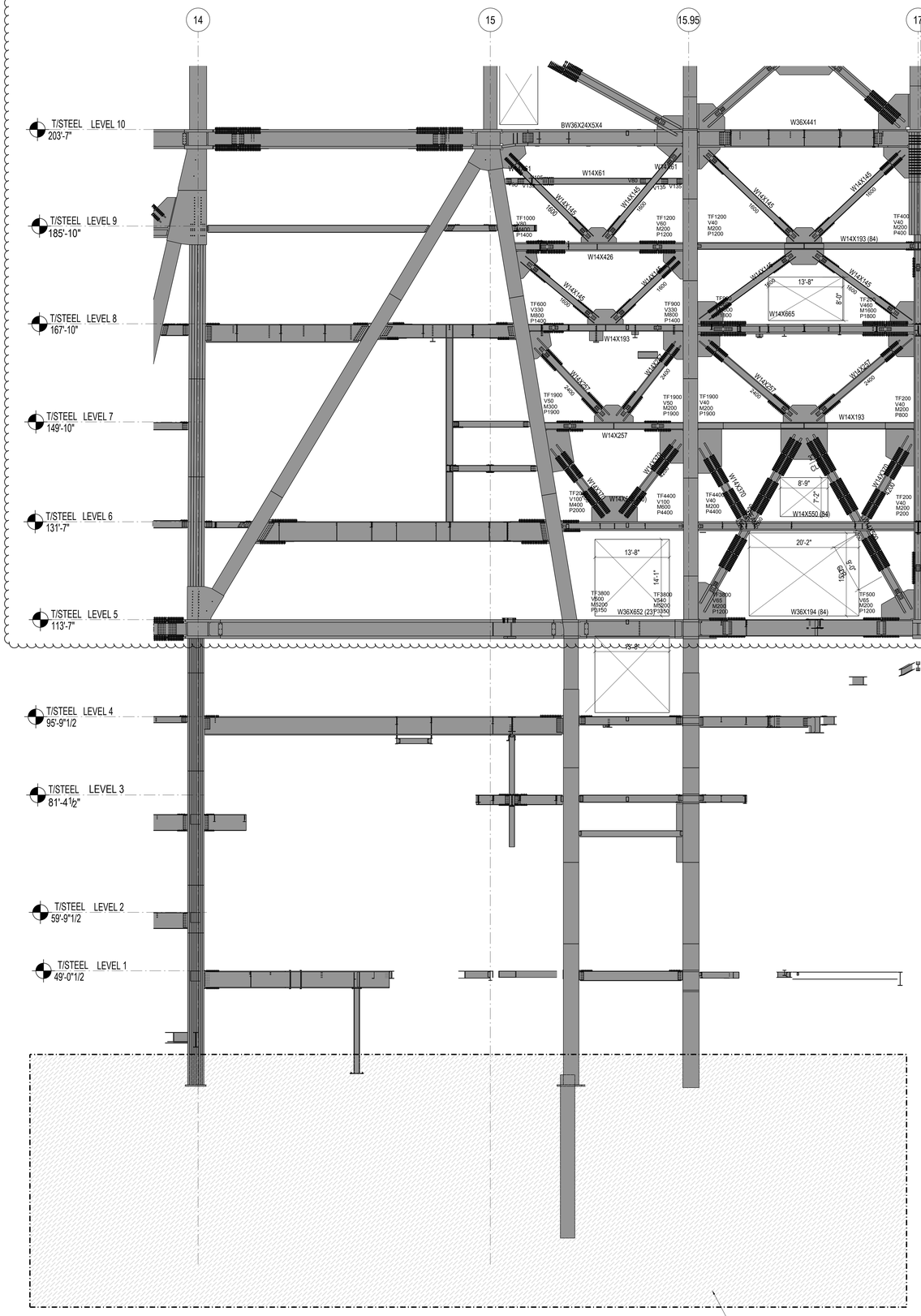

1 BELOW LEVEL 9 ELEVATION AT GRIDLINE B
1/4" = 1'-0"

PLATFORM SCOPE
NOT IN CONTRACT

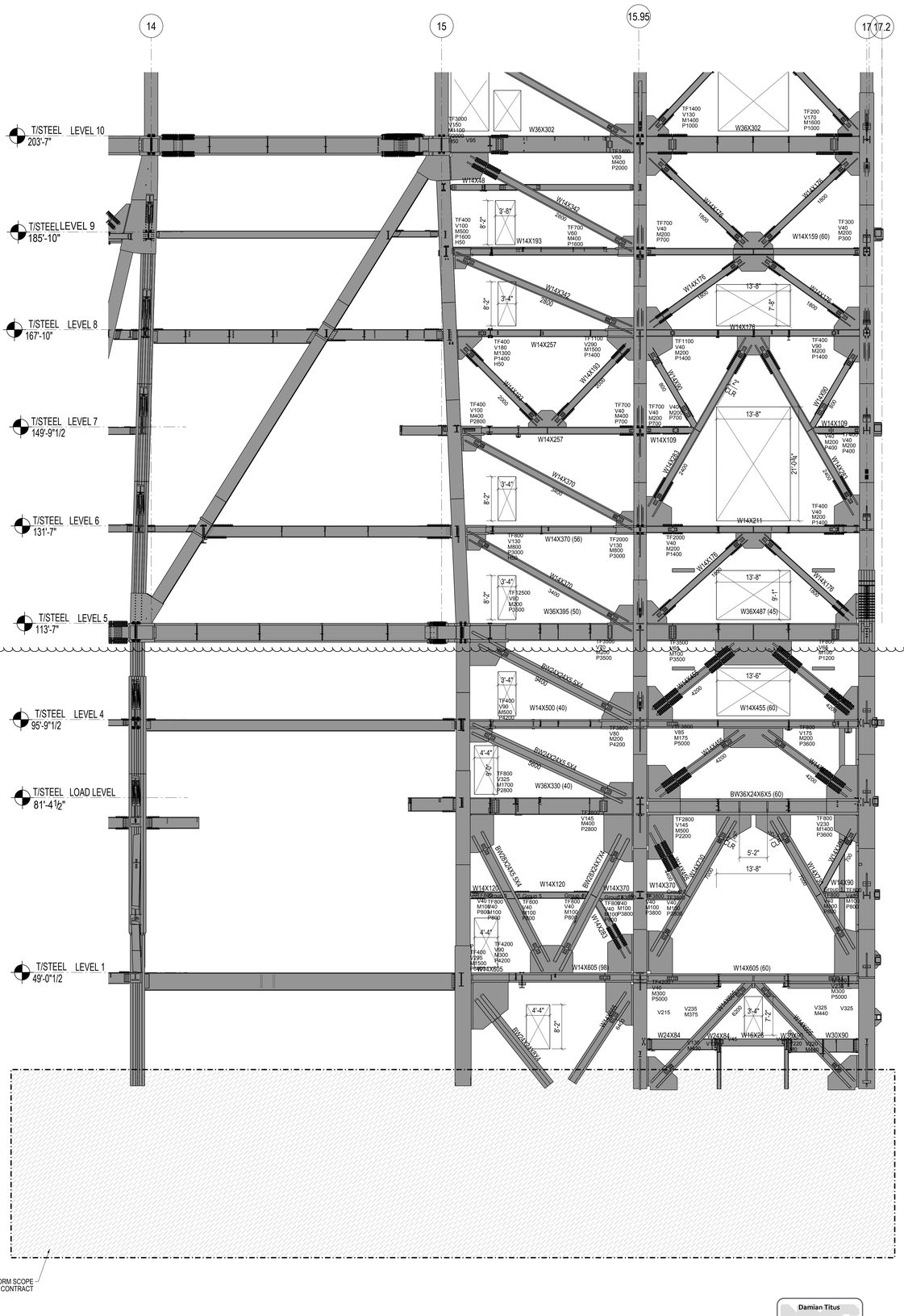

2 BELOW LEVEL 9 ELEVATION AT GRIDLINE C.1
1/4" = 1'-0"

PLATFORM SCOPE
NOT IN CONTRACT

Damian Titus
Buildings
APPROVED
Under Directive 2 of 1975
MECHANICAL APPLICATION
Date: 05/03/2017
NYC Development Hub

HUDSON YARDS - RETAIL PODIUM AND TOWER A

500 WEST 33RD STREET
New York, NY

Client
Related Companies
60 Columbus Circle
New York, NY 10023
TEL: 212.801.1000 FAX: 212.801.1048

Oxford Properties Group
320 Park Avenue, 17th Floor
New York, NY 10022
TEL: 212.986.7514 FAX: 212.986.7510

Architect
Kohn Pedersen Fox Associates
11 West 42nd Street
New York, New York 10036
TEL: 212.977.6500 FAX: 212.956.2526

Structural Engineer
Thornton Tomasetti, Inc.
51 Madison Avenue
New York, New York 10010
TEL: 917.661.7800 FAX: 718.661.7801

Mechanical, Electrical, Plumbing, Fire Protection
Jaros Baum & Bolles Consulting Engineers
80 Pine Street
New York, NY 10013
TEL: 212.530.9300 FAX: 212.269.5894

Retail Interior Design & Planning
Elkus-Manfredi
300 A Street
Boston, MA 02210
TEL: 617.426.1300

No.	Description	Date
2	D.O.B AMENDMENT #2	10/15/2016
1	D.O.B BUILDING PERMIT FILING	12/10/2014

Key Plan

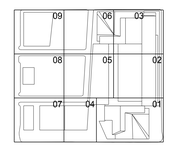

Issue Date 12/10/2014
Project No. N11328.00
Drawn By
Sheet Number

STATE OF NEW YORK
MICHAEL J. FISCHER
087 080
LICENSED ARCHITECT

HYE-TA-S2-5017
Drawing Title

BELOW LEVEL 9
NORTH SOUTH
BRACING SECTION

Drawing Number
S2-5017
Sub-Sheet Drawing Number
S-457.01

© 2013 KOHN PEDERSEN FOX ASSOCIATES PC. All rights reserved.

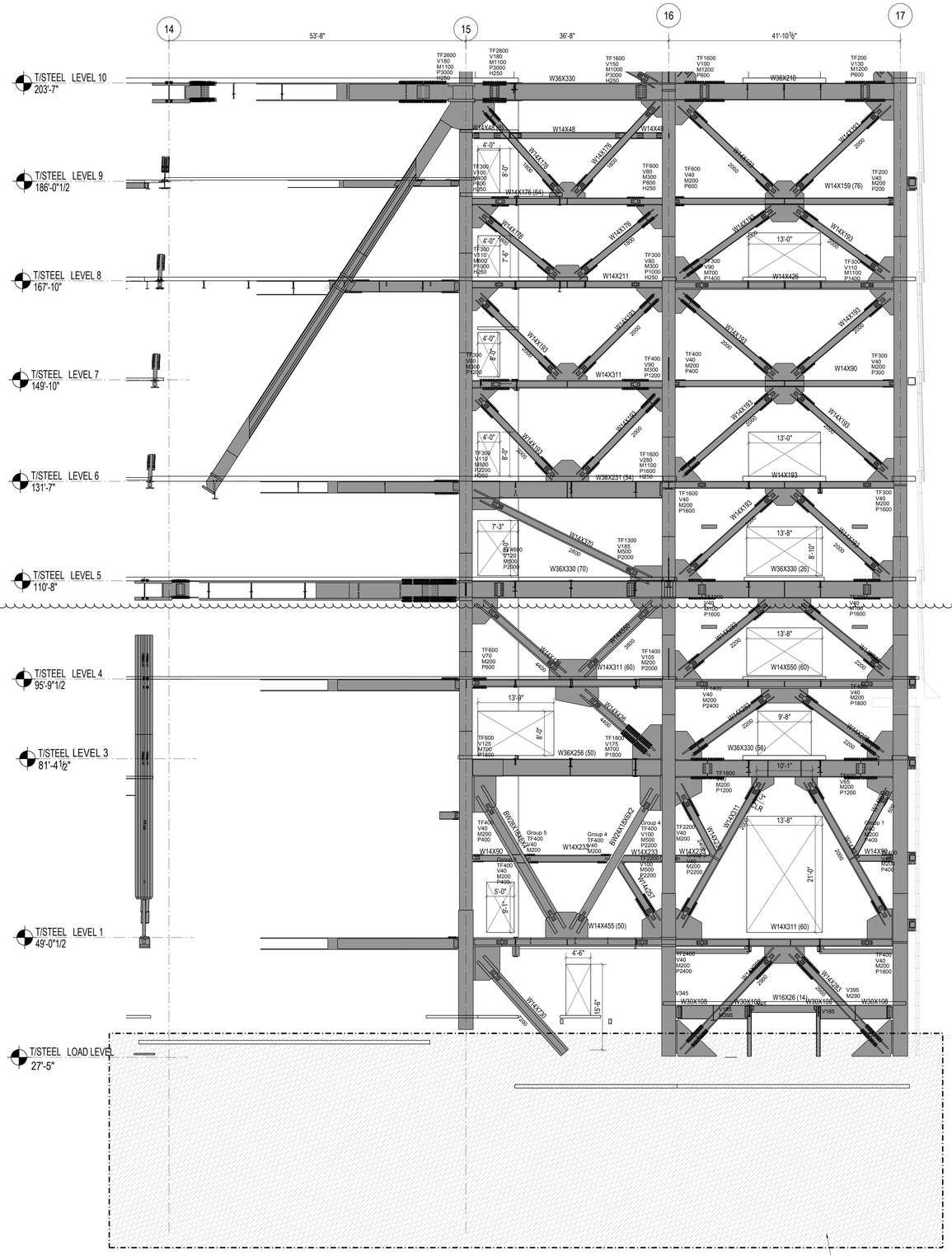

1 BELOW LEVEL 9 ELEVATION AT GRIDLINE C.9
¼" = 1'-0"

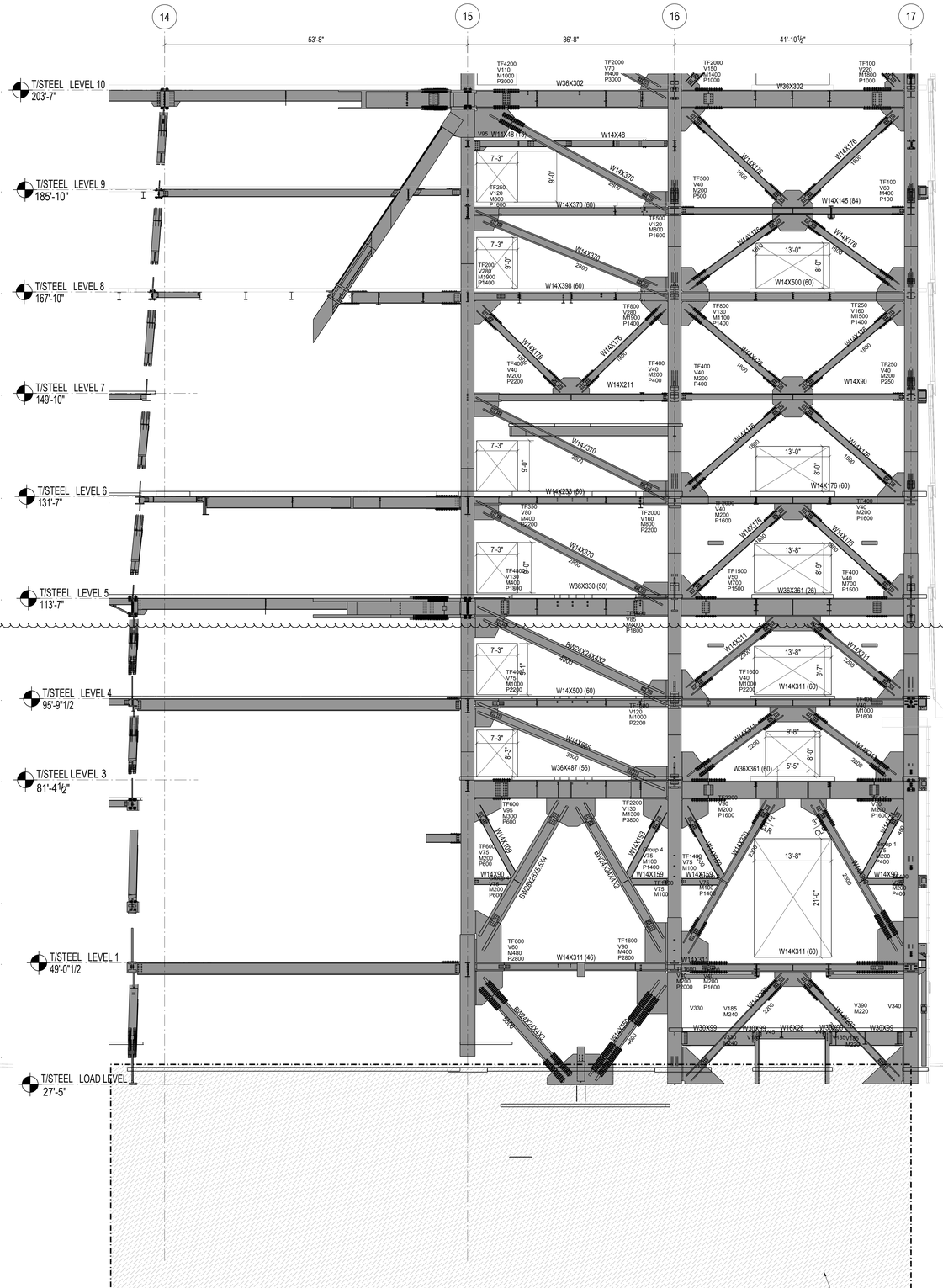

2 BELOW LEVEL 9 ELEVATION AT GRIDLINE D.8
¼" = 1'-0"

Damian Titus
Buildings
APPROVED
Under Directive 2 of 1975
AMENDED APPLICATION
Date: 05/03/2017
NYC Development Hub

HUDSON YARDS - RETAIL PODIUM AND TOWER A

500 WEST 33RD STREET
New York, NY

Client
Related Companies
50 Columbus Circle
New York, NY 10023
TEL: 212.801.1000 FAX: 212.801.1048

Oxford Properties Group
320 Park Avenue, 17th Floor
New York, NY 10022
TEL: 212.986.7514 FAX: 212.986.7510

Architect
Kohn Pedersen Fox Associates
11 West 42nd Street
New York, New York 10036
TEL: 212.977.6500 FAX: 212.956.2526

Structural Engineer
Thornton Tomasetti, Inc.
51 Madison Avenue
New York, New York 10010
TEL: 917.661.7800 FAX: 718.661.7801

Mechanical, Electrical, Plumbing, Fire Protection
Jaros Baum & Bolles Consulting Engineers
80 Pine Street
New York, NY 10013
TEL: 212.530.9300 FAX: 212.269.5894

Retail Interior Design & Planning
Elkus-Manfredi
800 A Street
Boston, MA 02210
TEL: 617.426.1300

No.	Description	Date
2	D.O.B AMENDMENT #2	10/15/2016
1	D.O.B BUILDING PERMIT FILING	12/10/2014

Key Plan

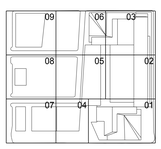

Issue Date 12/10/2014
Project No. N11328.00
Drawn By
Sheet Number

HYE-TA-S2-5018
Drawing Title

BELOW LEVEL 9 NORTH SOUTH BRACING SECTION

Drawing Number
S2-5018
B-Scan Drawing Number
S-458.01

SHEET 228 OF 443

© 2013 KOHN PEDERSEN FOX ASSOCIATES PC. All rights reserved.

CERTIFICATE NUMBER: 2013050203 SUB Number
E13050203000 SUB-CODE

HUDSON YARDS - RETAIL PODIUM AND TOWER A

500 WEST 33RD STREET
New York, NY

Client
Related Companies
60 Columbus Circle
New York, NY 10023
TEL: 212.801.1000 FAX: 212.801.1048

Oxford Properties Group
320 Park Avenue, 17th Floor
New York, NY 10022
TEL: 212.986.7514 FAX: 212.986.7510

Architect
Kohn Pedersen Fox Associates
11 West 42nd Street
New York, New York 10036
TEL: 212.977.6500 FAX: 212.956.2526

Structural Engineer
Thornton Tomasetti, Inc.
51 Madison Avenue
New York, New York 10010
TEL: 917.661.7800 FAX: 718.661.7801

Mechanical, Electrical, Plumbing, Fire Protection
Jaros Baum & Bolles Consulting Engineers
60 Pine Street
New York, NY 10013
TEL: 212.530.9300 FAX: 212.269.5894

Retail Interior Design & Planning
Elkus-Manfredi
300 A Street
Boston, MA 02210
TEL: 617.426.1300

No.	Description	Date
2	D.O.B AMENDMENT #2	10/15/2016
1	D.O.B BUILDING PERMIT FILING	12/10/2014

Key Plan

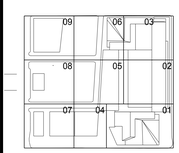

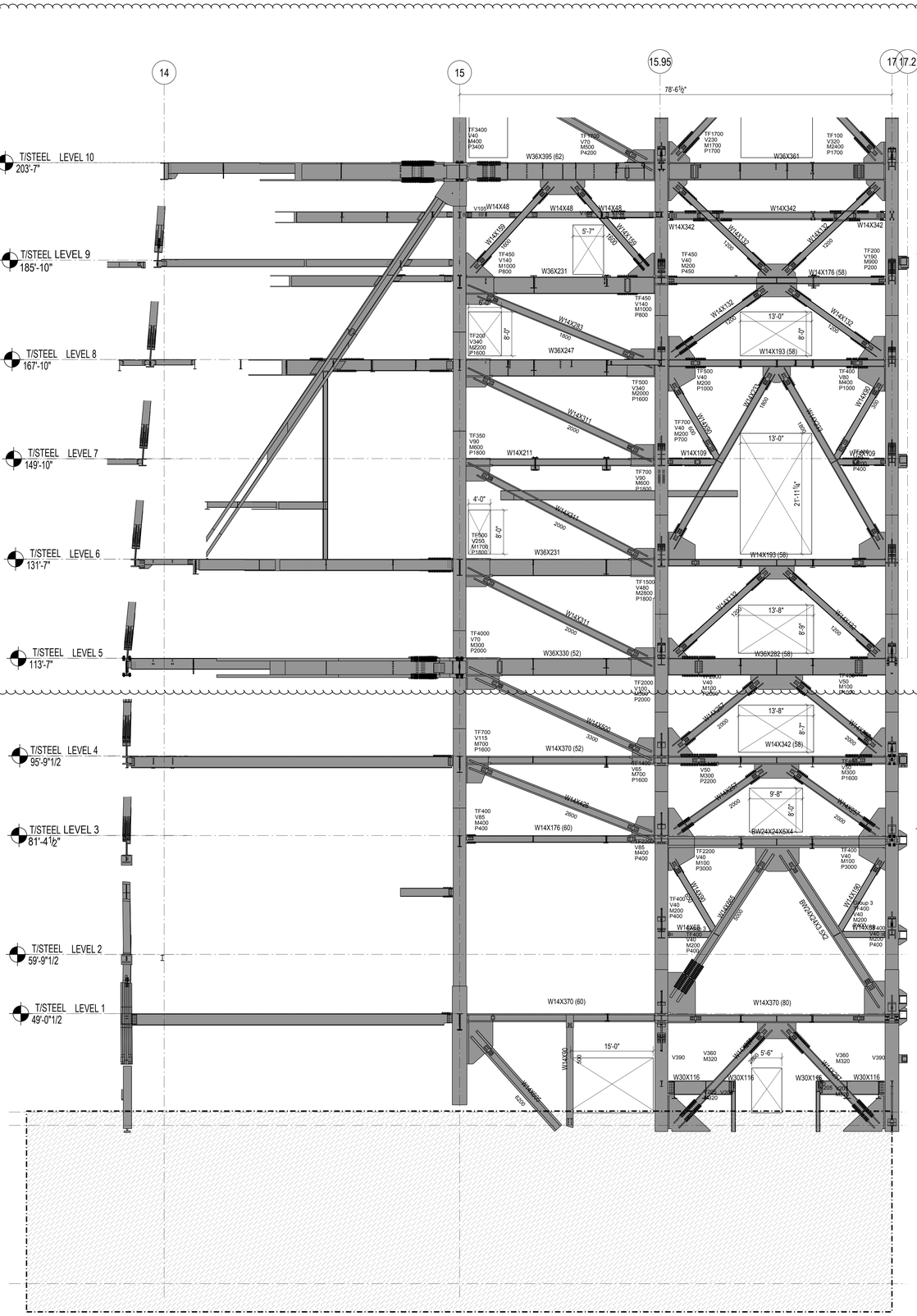

1 BELOW LEVEL 9 ELEVATION AT GRIDLINE E.8
¼" = 1'-0"

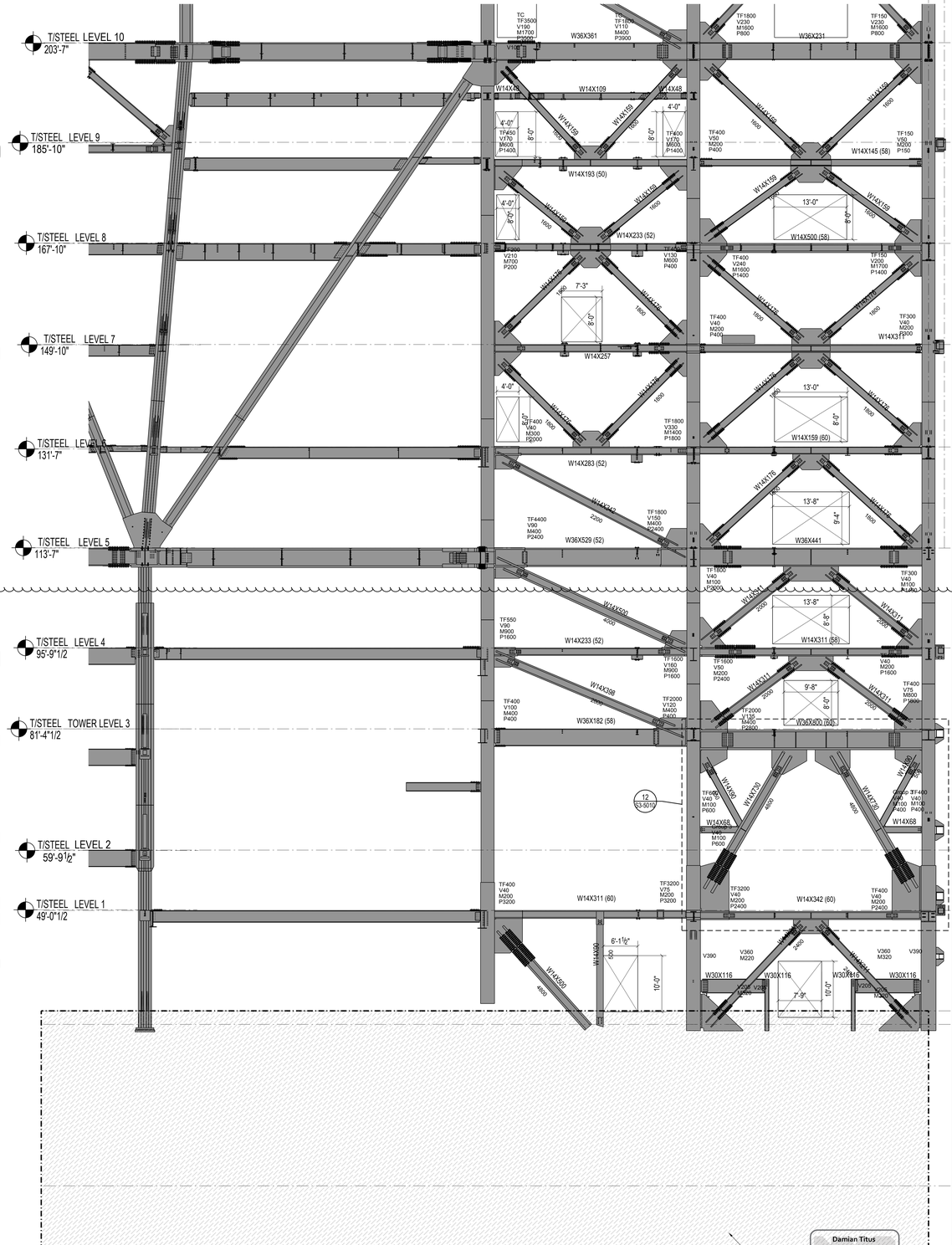

2 BELOW LEVEL 9 ELEVATION AT GRIDLINE F.9
¼" = 1'-0"

Damian Titus
Buildings
APPROVED
Under Directive 2 of 1975
MEANS OF EGRESS
Date: 05/03/2017
NYC Development Hub

Issue Date 12/10/2014
Project No. N11328.00
Drawn By
Sheet Number

HYE-TA-S2-5019

Drawing Title

BELOW LEVEL 9
NORTH SOUTH
BRACING SECTION

Drawing Number
S2-5019
Kohn Drawing Number
S-459.01

© 2013 KOHN PEDERSEN FOX ASSOCIATES PC. All rights reserved.

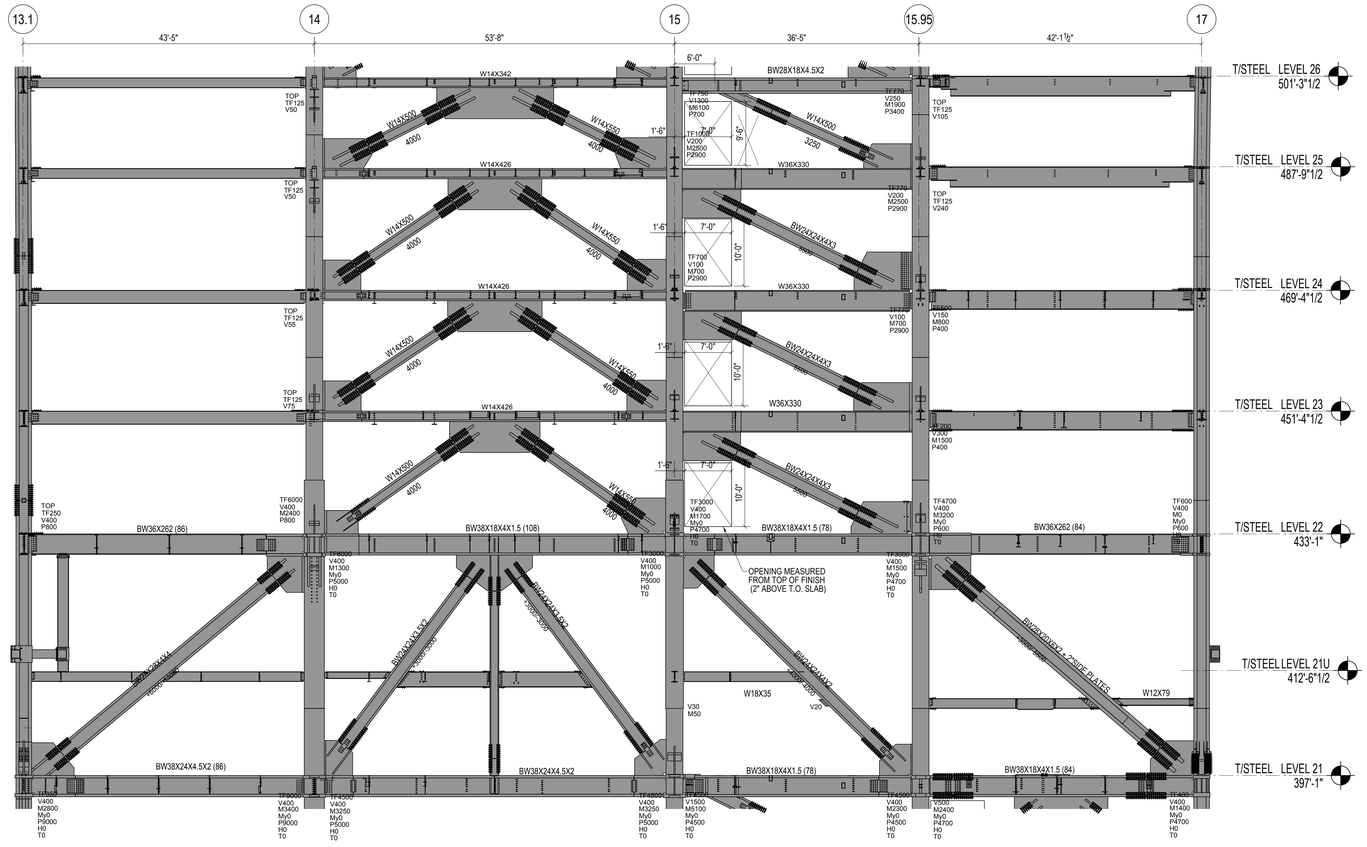

1 BRACING ELEVATION OF GRID LINE B FROM LEVEL 21 TO 26
NOT TO SCALE

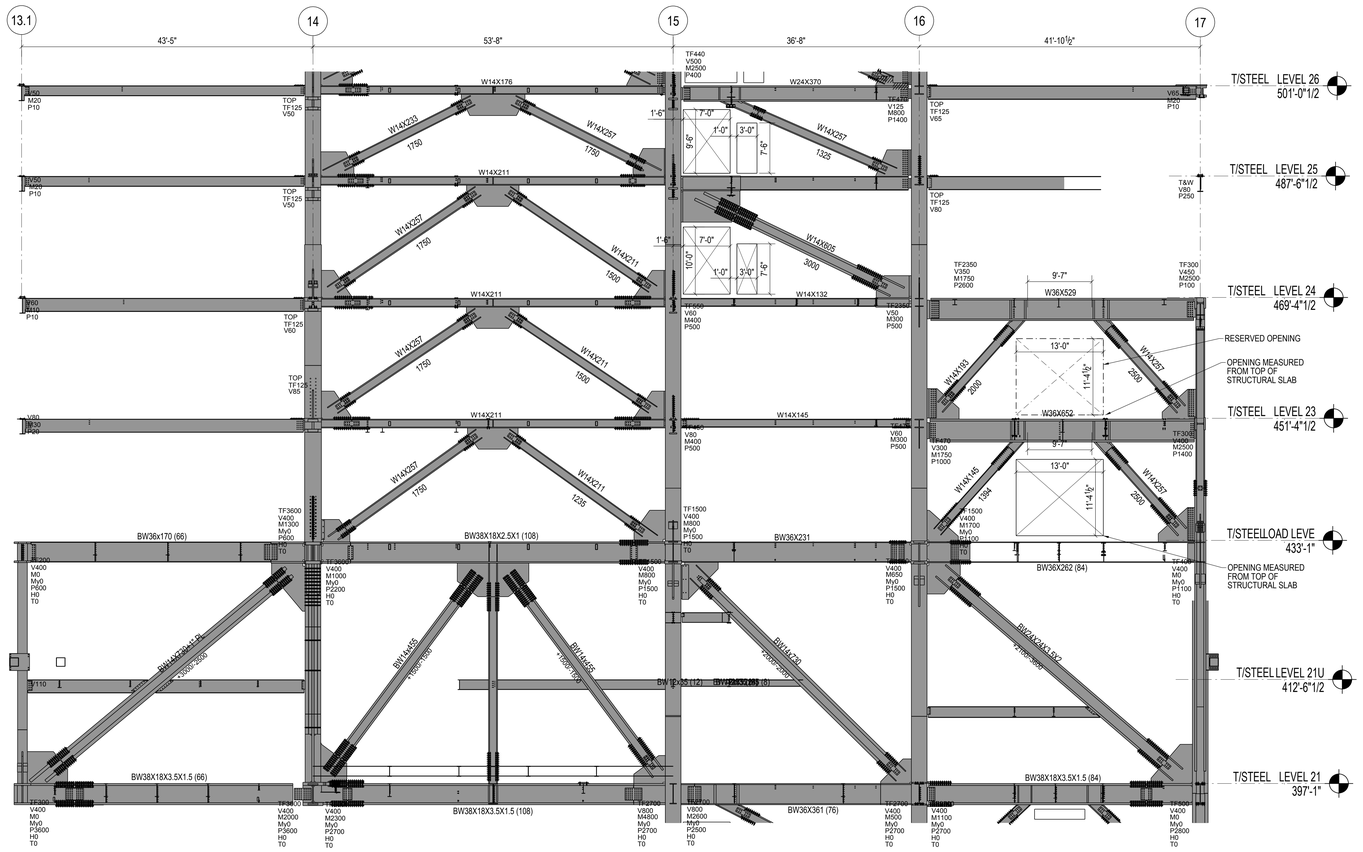

SHEET NOTES :

1. UNO, AT BRACED FRAME BEAMS INDICATED ON THIS ELEVATION, PROVIDE 2 STUDS/FT. FOR ALL REGIONS WHERE SLAB IS PRESENT ALONG THE BEAM LENGTH.

0 4' 8' 16'

HUDSON YARDS - RETAIL PODIUM AND TOWER A
500 WEST 33RD STREET
New York, NY

Client
Related Companies
60 Columbus Circle
New York, NY 10023
TEL: 212.801.1000 FAX: 212.801.1048

Oxford Properties Group
320 Park Avenue, 17th Floor
New York, NY 10022
TEL: 212.986.7514 FAX: 212.986.7510

Architect
Kohn Pedersen Fox Associates
11 West 42nd Street
New York, New York 10036
TEL: 212.977.6500 FAX: 212.956.2526

Structural Engineer
Thornton Tomasetti, Inc.
51 Madison Avenue
New York, New York 10010
TEL: 917.661.7800 FAX: 718.661.7801

Mechanical, Electrical, Plumbing, Fire Protection
Jaros Baum & Bolles Consulting Engineers
80 Pine Street
New York, NY 10013
TEL: 212.530.9300 FAX: 212.269.5894

Retail Interior Design & Planning
Elkus-Manfredi
300 A Street
Boston, MA 02210
TEL: 617.426.1300

No.	Description	Date
2	D.O.B AMENDMENT #2	10/15/2016
1	D.O.B BUILDING PERMIT FILING	12/10/2014

Key Plan

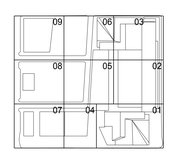

Issue Date 12/10/2014
Project No. N11328.00
Drawn By
Sheet Number

Damian Titus
DOB Buildings
APPROVED
Under Directive 2 of 1975
MECHANICAL EQUIPMENT
Date: 05/03/2017
NYC Development Hub

HYE-TA-S2-5050
Drawing Title

SKY LOBBY NORTH SOUTH BRACING SECTIONS

Drawing Number
S2-5050
B-Scan Drawing Number
S-470.01

SHEET 230 OF 443

© 2013 KOHN PEDERSEN FOX ASSOCIATES PC. All rights reserved.

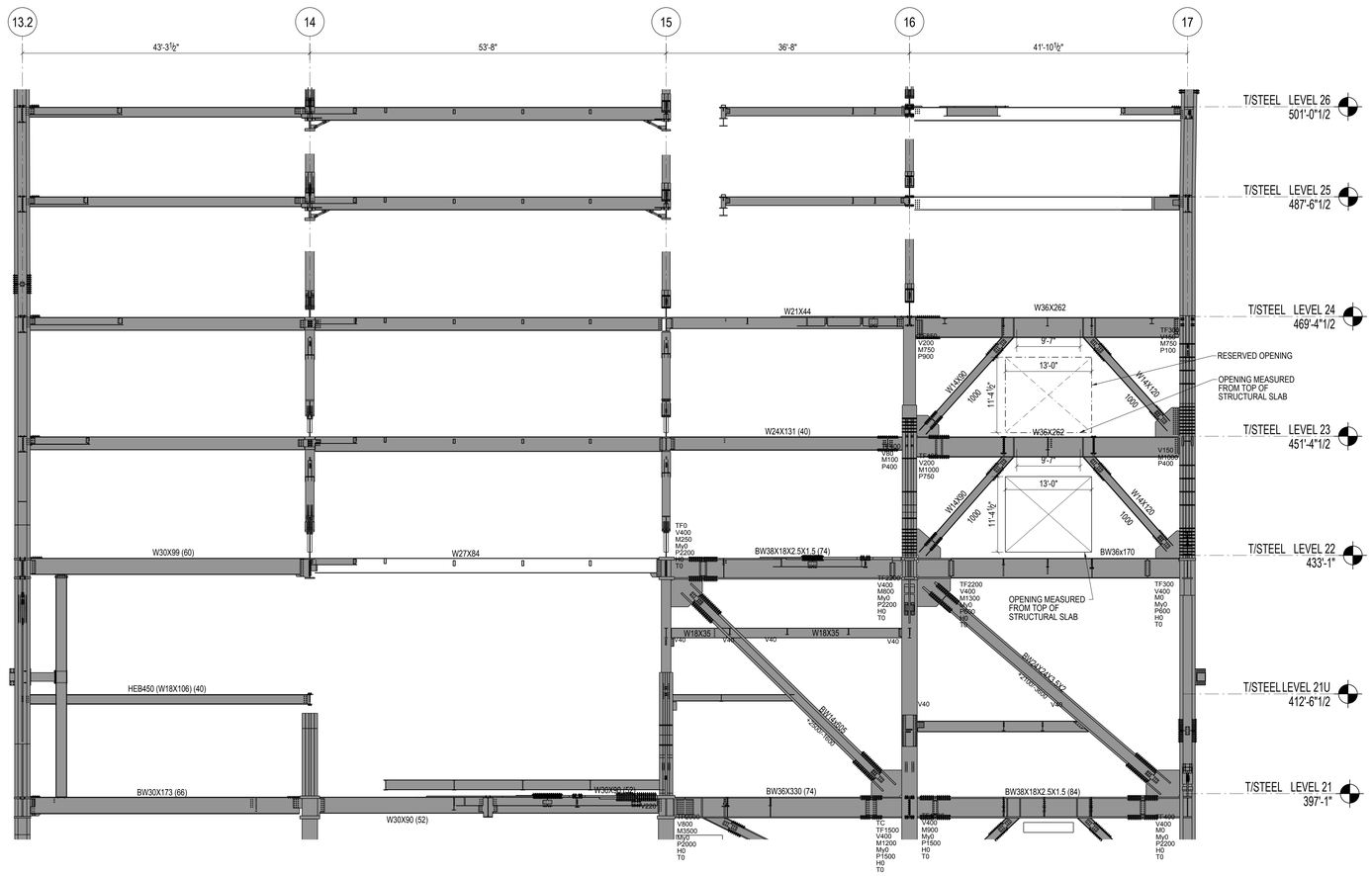

1 BRACING ELEVATION OF GRID LINE C.9 FROM LEVEL 21 TO 26
1/8" = 1'-0"

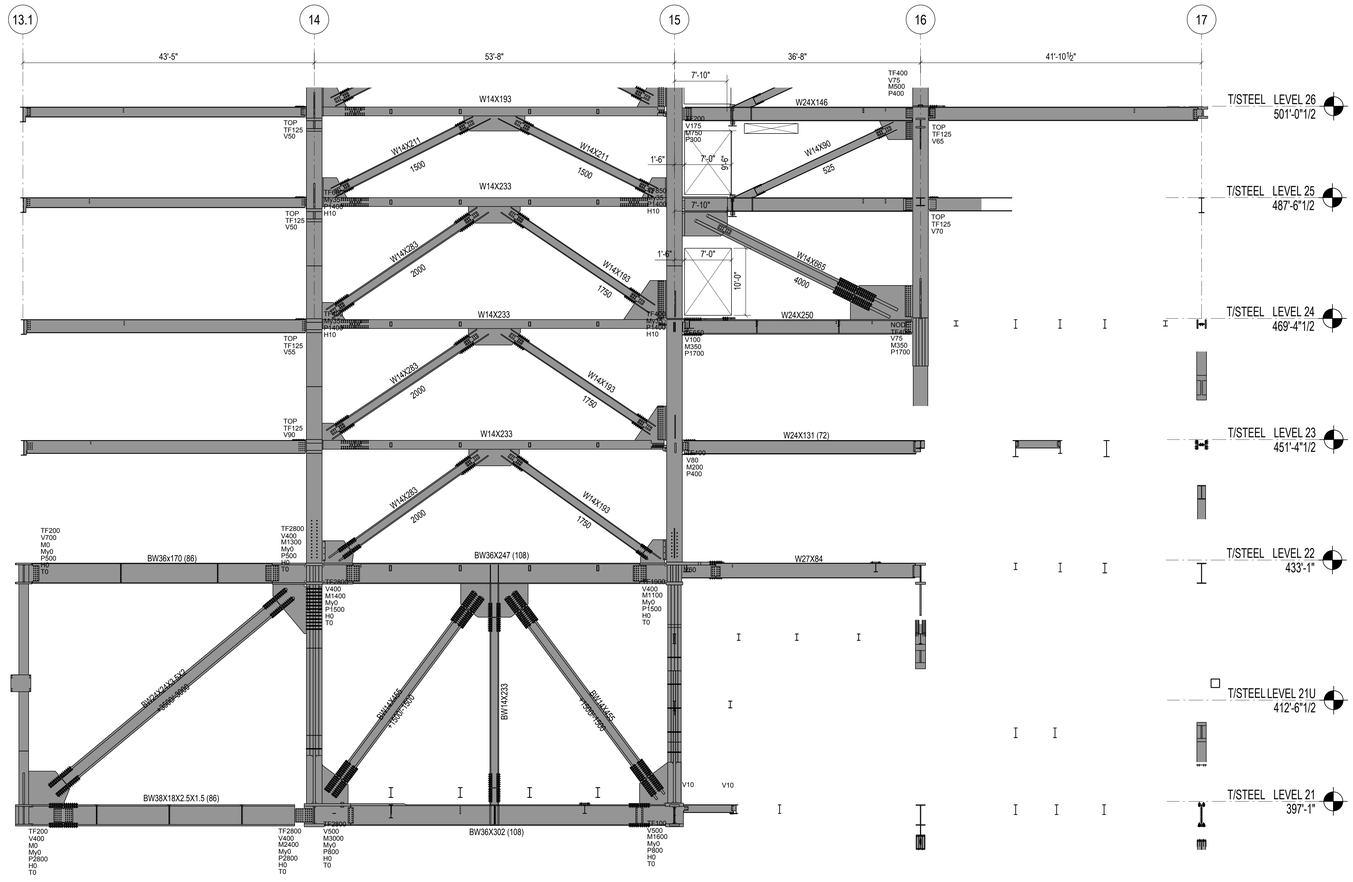

SHEET NOTES :

1. UNO, AT BRACED FRAME BEAMS INDICATED ON THIS ELEVATION, PROVIDE 2 STUDS/FT. FOR ALL REGIONS WHERE SLAB IS PRESENT ALONG THE BEAM LENGTH.

2 BRACING ELEVATION OF GRID LINE D.1 FROM LEVEL 21 TO 26
1/8" = 1'-0"

0 4' 8' 16'

Damian Titus
Buildings
APPROVED
Under Directive 3 of 1975
AMENDED APPLICATION
Date: 05/03/2017
NYC Development Hub

HUDSON YARDS - RETAIL PODIUM AND TOWER A

500 WEST 33RD STREET
New York, NY

Client
Related Companies
60 Columbus Circle
New York, NY 10023
TEL: 212.801.1000 FAX: 212.801.1048

Oxford Properties Group
320 Park Avenue, 17th Floor
New York, NY 10022
TEL: 212.986.7514 FAX: 212.986.7510

Architect
Kohn Pedersen Fox Associates
11 West 42nd Street
New York, New York 10036
TEL: 212.977.6500 FAX: 212.956.2526

Structural Engineer
Thornton Tomasetti, Inc.
51 Madison Avenue
New York, New York 10010
TEL: 917.661.7800 FAX: 718.661.7801

Mechanical, Electrical, Plumbing, Fire Protection
Jaros Baum & Bolles Consulting Engineers
80 Pine Street
New York, NY 10013
TEL: 212.530.9300 FAX: 212.269.5894

Retail Interior Design & Planning
Elkus-Manfredi
300 A Street
Boston, MA 02210
TEL: 617.426.1300

No.	Description	Date
2	D.O.B AMENDMENT #2	10/15/2016
1	D.O.B BUILDING PERMIT FILING	12/10/2014

Key Plan

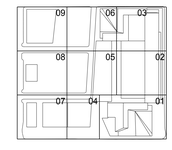

Issue Date 12/10/2014
Project No. N11328.00
Drawn By:
Sheet Number

STATE OF NEW YORK — DAVID L. COHN — 081... — PROFESSIONAL ENGINEER

HYE-TA-S2-5051

Drawing Title

SKY LOBBY NORTH SOUTH BRACING SECTIONS

Drawing Number
S2-5051
B-Scan Drawing Number
S-471.01

SHEET 231 OF 443

© 2013 KOHN PEDERSEN FOX ASSOCIATES PC. All rights reserved.

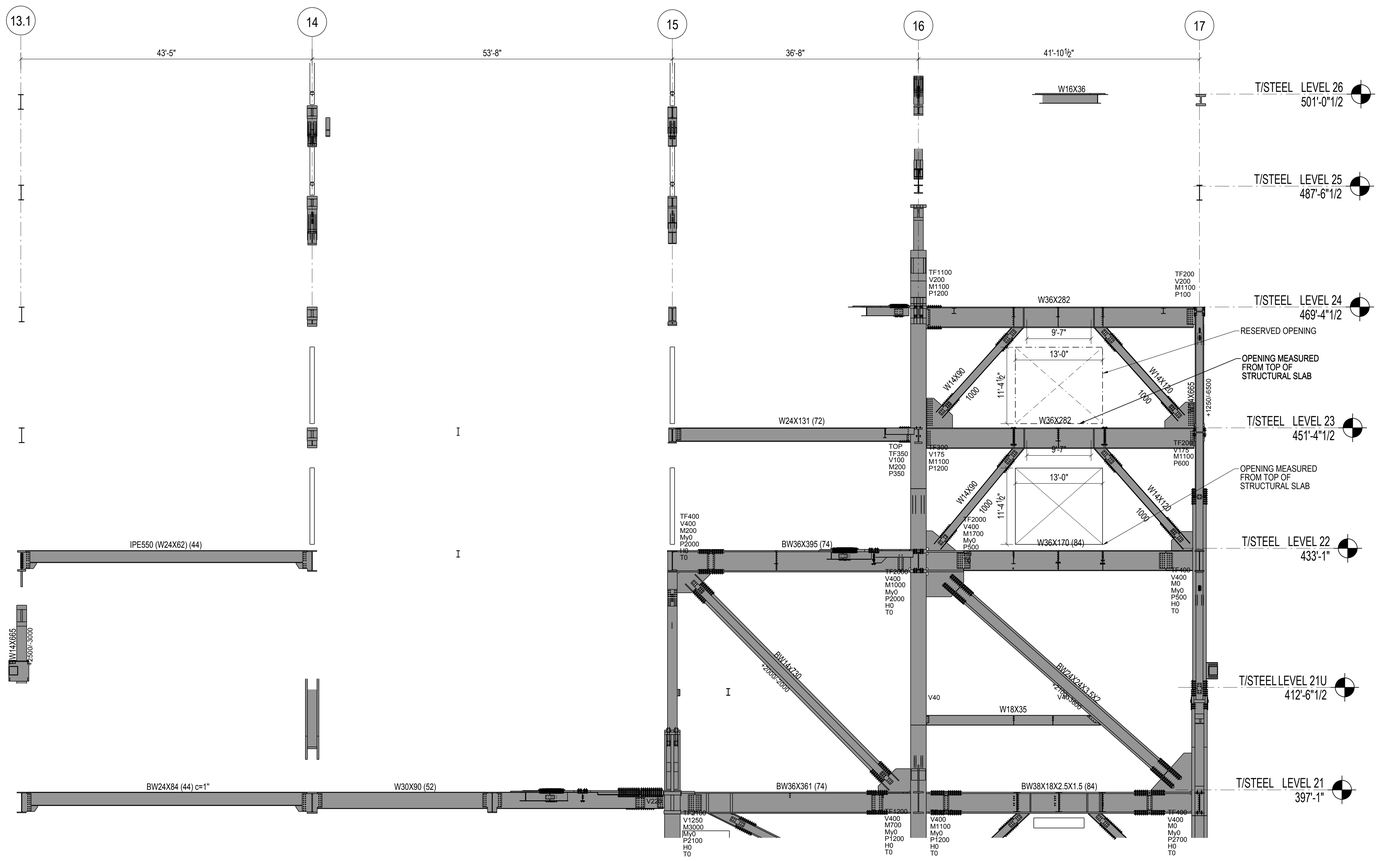

1 **BRACING ELEVATION OF GRID LINE D.8 FROM LEVEL 21 TO 26**
1/8" = 1'-0"

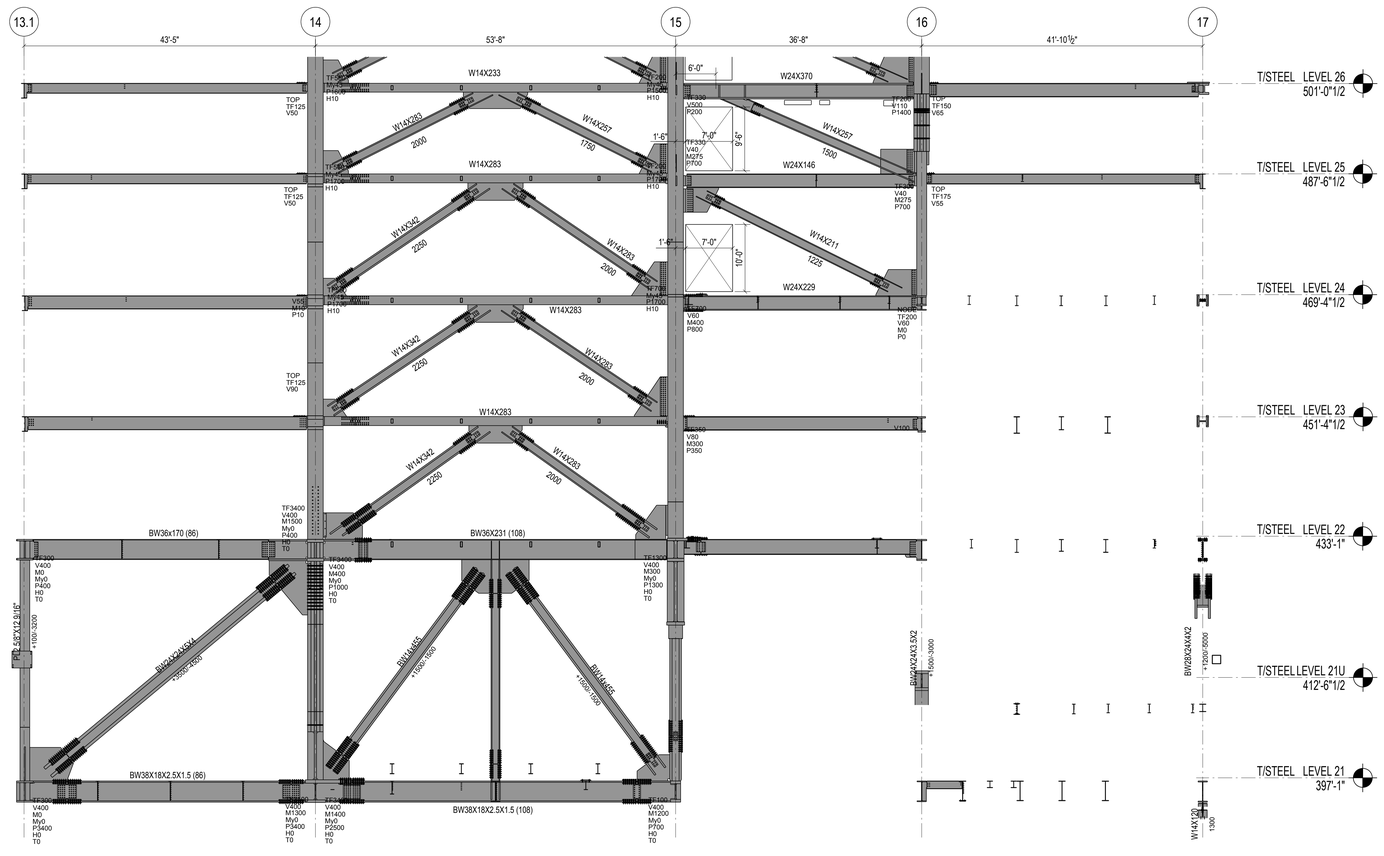

2 **BRACING ELEVATION OF GRID LINE E.1 FROM LEVEL 21 TO 26**
1/8" = 1'-0"

SHEET NOTES :

1. UNO, AT BRACED FRAME BEAMS INDICATED ON THIS ELEVATION, PROVIDE 2 STUDS/FT. FOR ALL REGIONS WHERE SLAB IS PRESENT ALONG THE BEAM LENGTH.

HUDSON YARDS - RETAIL PODIUM AND TOWER A

500 WEST 33RD STREET
New York, NY

Client
Related Companies
60 Columbus Circle
New York, NY 10023
TEL: 212.801.1000 FAX: 212.801.1048

Oxford Properties Group
320 Park Avenue, 17th Floor
New York, NY 10022
TEL: 212.986.7514 FAX: 212.986.7510

Architect
Kohn Pedersen Fox Associates
11 West 42nd Street
New York, New York 10036
TEL: 212.977.6500 FAX: 212.956.2526

Structural Engineer
Thornton Tomasetti, Inc.
51 Madison Avenue
New York, New York 10010
TEL: 917.661.7800 FAX: 718.661.7801

Mechanical, Electrical, Plumbing, Fire Protection
Jaros Baum & Bolles Consulting Engineers
80 Pine Street
New York, NY 10013
TEL: 212.530.9300 FAX: 212.269.5894

Retail Interior Design & Planning
Elkus-Manfredi
300 A Street
Boston, MA 02210
TEL: 617.426.1300

No.	Description	Date
2	D.O.B AMENDMENT #2	10/15/2016
1	D.O.B BUILDING PERMIT FILING	12/10/2014

Key Plan

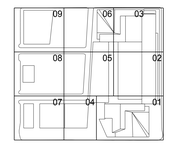

Issue Date 12/10/2014
Project No. N11328.00
Drawn By
Sheet Number

HYE-TA-S2-5052
Drawing Title

SKY LOBBY NORTH SOUTH BRACING SECTIONS

Drawing Number
S2-5052
Revision Drawing Number
S-472.01

Damian Titus
Buildings
APPROVED
Under Directive 2 of 1975
EXTENSION OF OPERATION
Date: 09/03/2017
NYC Development Hub

0 4' 8' 16'

© 2013 KOHN PEDERSEN FOX ASSOCIATES PC. All rights reserved.

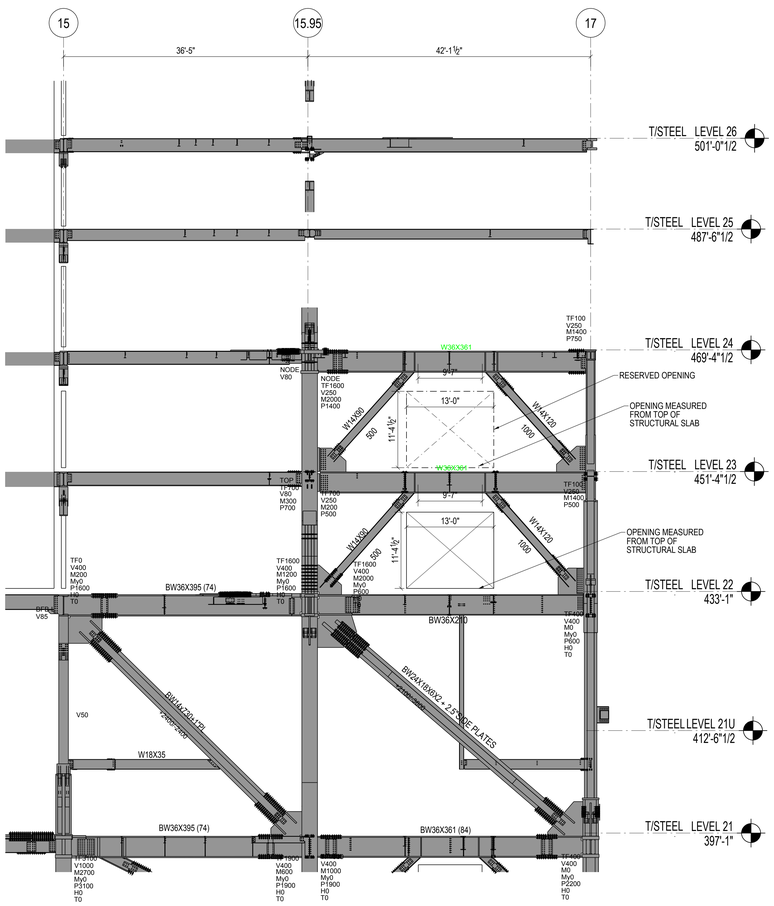

1 BRACING ELEVATION OF GRID LINE E.8 FROM LEVEL 21 TO 26
⅛" = 1'-0"

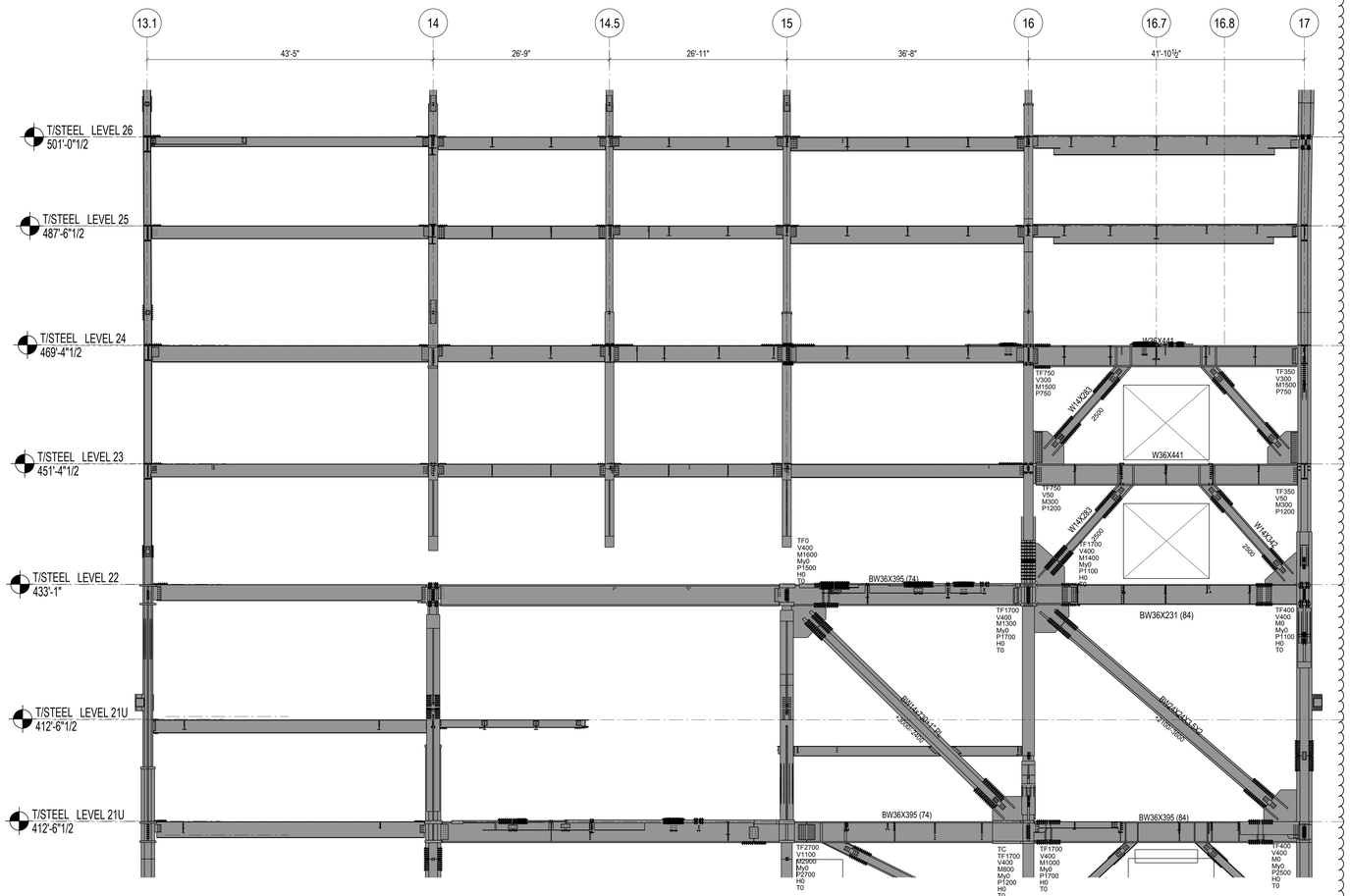

2 BRACING ELEVATION OF GRID LINE F.9 FROM LEVEL 21 TO 26
⅛" = 1'-0"

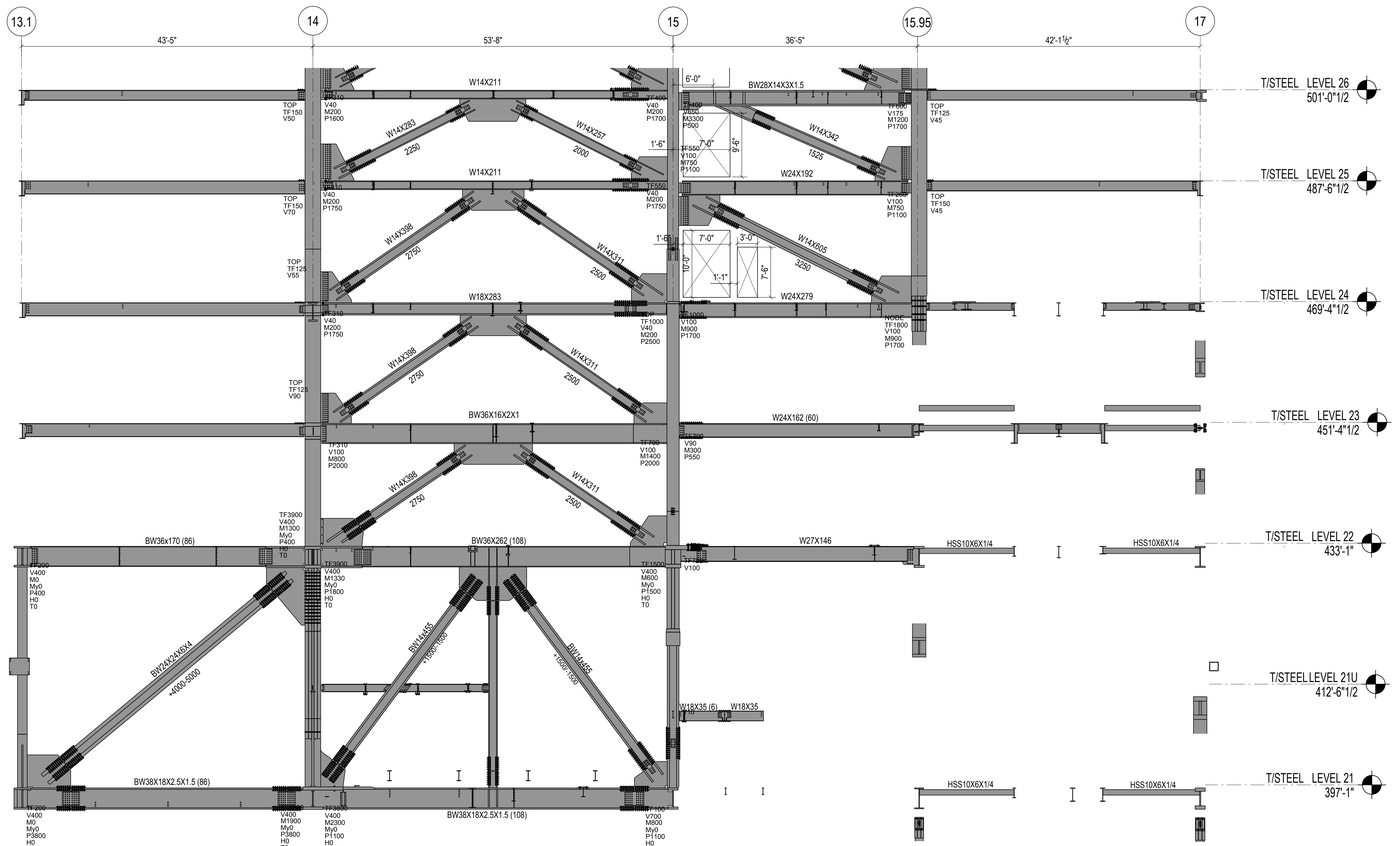

3 BRACING ELEVATION OF GRID LINE F.6 FROM LEVEL 21 TO 26
⅛" = 1'-0"

SHEET NOTES :

1. UNO, AT BRACED FRAME BEAMS INDICATED ON THIS ELEVATION, PROVIDE 2 STUDS/FT. FOR ALL REGIONS WHERE SLAB IS PRESENT ALONG THE BEAM LENGTH.

Damian Titus
Buildings
APPROVED
Under Directive 2 of 1975
AMENDED APPLICATION
Date: 05/03/2017
NYC Development Hub

0 4' 8' 16'

HUDSON YARDS - RETAIL PODIUM AND TOWER A

500 WEST 33RD STREET
New York, NY

Client
Related Companies
60 Columbus Circle
New York, NY 10023
TEL: 212.801.1000 FAX: 212.801.1048

Oxford Properties Group
320 Park Avenue, 17th Floor
New York, NY 10022
TEL: 212.986.7514 FAX: 212.986.7510

Architect
Kohn Pedersen Fox Associates
11 West 42nd Street
New York, New York 10036
TEL: 212.977.6500 FAX: 212.956.2526

Structural Engineer
Thornton Tomasetti, Inc.
51 Madison Avenue
New York, New York 10010
TEL: 917.661.7800 FAX: 718.661.7801

Mechanical, Electrical, Plumbing, Fire Protection
Jaros Baum & Bolles Consulting Engineers
80 Pine Street
New York, NY 10013
TEL: 212.530.9300 FAX: 212.269.5894

Retail Interior Design & Planning
Elkus-Manfredi
300 A Street
Boston, MA 02210
TEL: 617.426.1300

No.	Description	Date
2	D.O.B AMENDMENT #2	10/15/2016
1	D.O.B BUILDING PERMIT FILING	12/10/2014

Key Plan

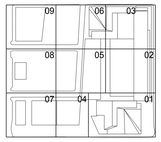

Issue Date 12/10/2014
Project No. N11328.00
Drawn By
Sheet Number

HYE-TA-S2-5053
Drawing Title

SKY LOBBY NORTH SOUTH BRACING SECTIONS

Drawing Number
S2-5053
B-Scan Drawing Number
S-473.01

© 2013 KOHN PEDERSEN FOX ASSOCIATES PC. All rights reserved.

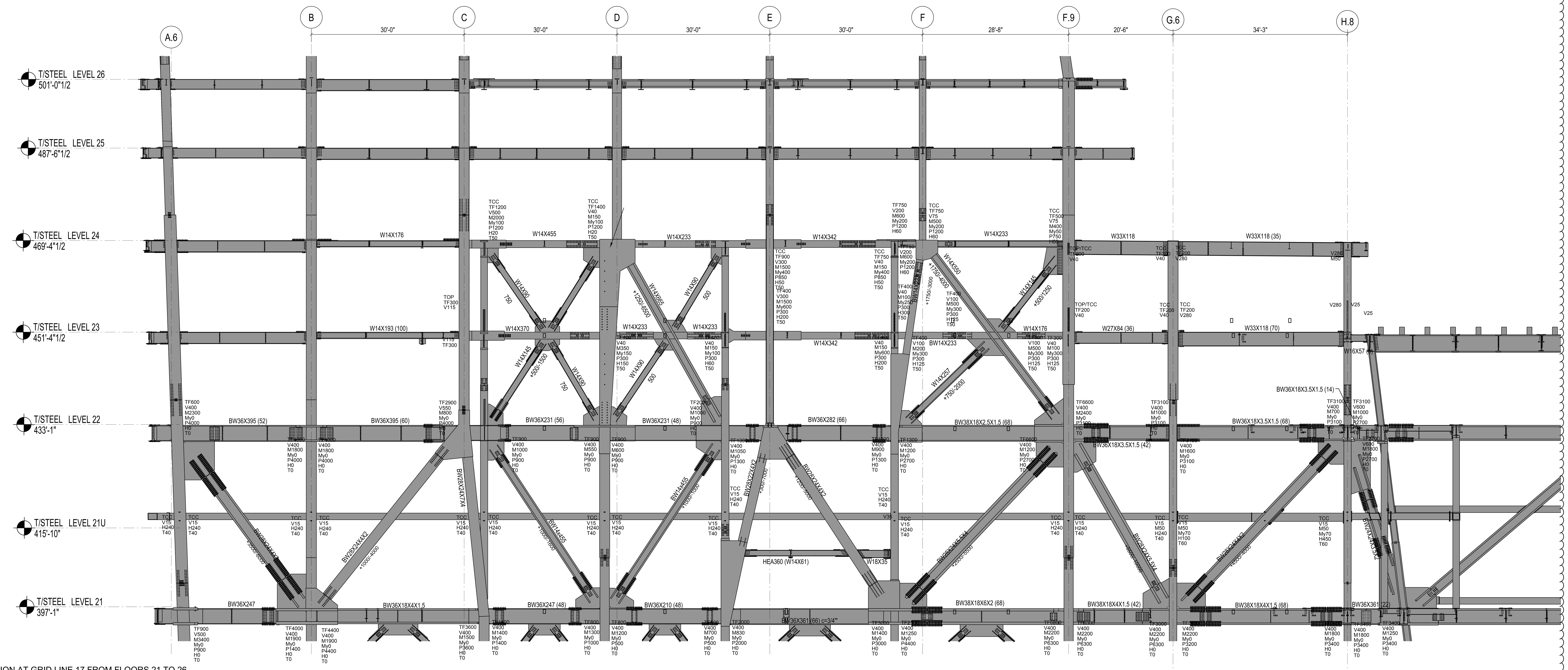

1 ELEVATION AT GRID LINE 17 FROM FLOORS 21 TO 26
NOT TO SCALE

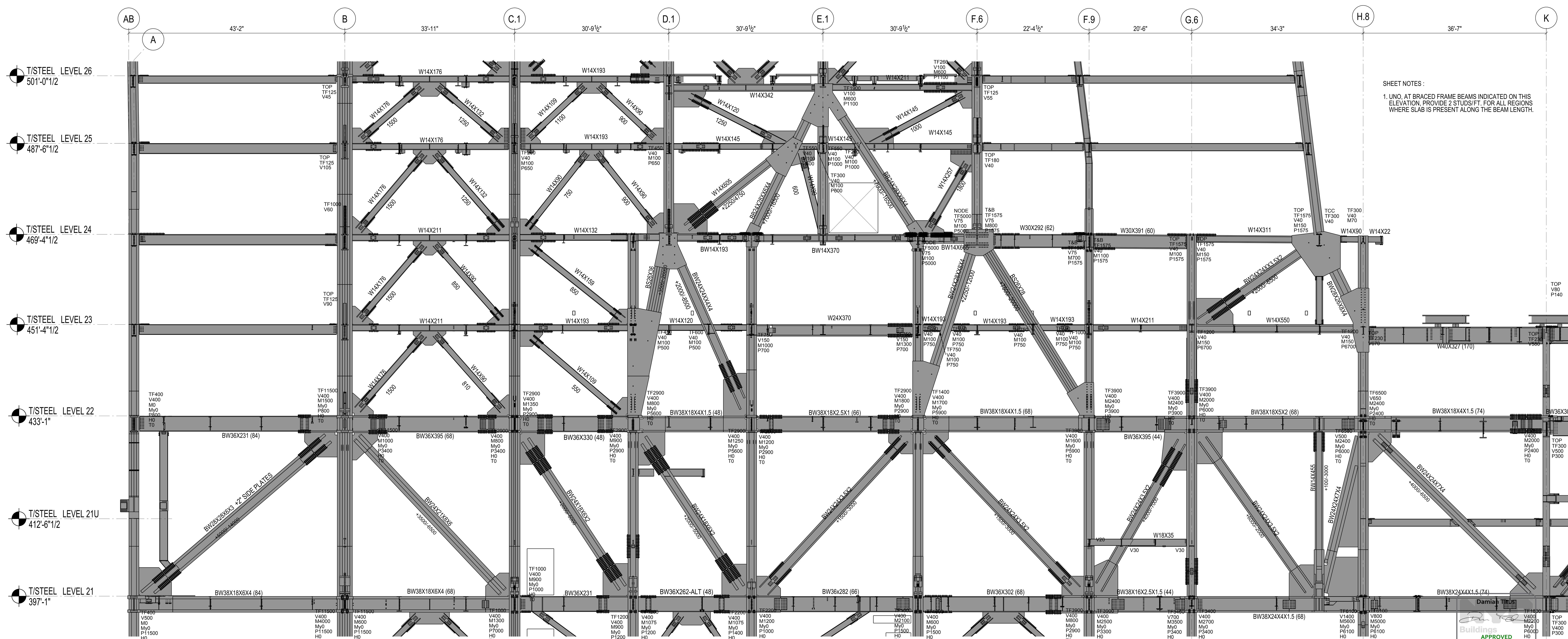

SHEET NOTES :

1. UNO, AT BRACED FRAME BEAMS INDICATED ON THIS ELEVATION, PROVIDE 2 STUDS/FT. FOR ALL REGIONS WHERE SLAB IS PRESENT ALONG THE BEAM LENGTH.

2 ELEVATION AT GRID LINE 16 FROM FLOORS 21 TO 26
NOT TO SCALE

DEPT OF BLDGS 121186251 Job Number

ES382699256 Scan Code

HUDSON YARDS - RETAIL PODIUM AND TOWER A

500 WEST 33RD STREET
New York, NY

Client
Related Companies
60 Columbus Circle
New York, NY 10023
TEL: 212.801.1000 FAX: 212.801.1048

Oxford Properties Group
320 Park Avenue, 17th Floor
New York, NY 10022
TEL: 212.986.7514 FAX: 212.986.7510

Architect
Kohn Pedersen Fox Associates
11 West 42nd Street
New York, New York 10036
TEL: 212.977.6500 FAX: 212.956.2526

Structural Engineer
Thornton Tomasetti, Inc.
51 Madison Avenue
New York, New York 10010
TEL: 917.661.7800 FAX: 718.661.7801

Mechanical, Electrical, Plumbing, Fire Protection
Jaros Baum & Bolles Consulting Engineers
80 Pine Street
New York, NY 10013
TEL: 212.530.9300 FAX: 212.269.5894

Retail Interior Design & Planning
Elkus-Manfredi
300 A Street
Boston, MA 02210
TEL: 617.426.1300

No.	Description	Date
2	D.O.B AMENDMENT #2	10/15/2016
1	D.O.B BUILDING PERMIT FILING	12/10/2014

Key Plan

09 06 03
08 05 02
07 04 01

Issue Date 12/10/2014
Project No. N11328.00
Drawn By
Sheet Number

STATE OF NEW YORK · MICHAEL J. SQUARZINI · LIC. NO. 080640 · PROFESSIONAL ENGINEER

Damian Titus
Buildings
APPROVED
Under Directive 2 of 1975
AMENDED APPLICATION
Date: 05/03/2017
NYC Development Hub

HYE-TA-S2-5054
Drawing Title

SKY LOBBY EAST-WEST BRACING SECTIONS

Drawing Number
S2-5054
B-Scan Drawing Number
S-474.01

0 4' 8' 16'

SHEET 234 OF 443

© 2013 KOHN PEDERSEN FOX ASSOCIATES PC. All rights reserved.

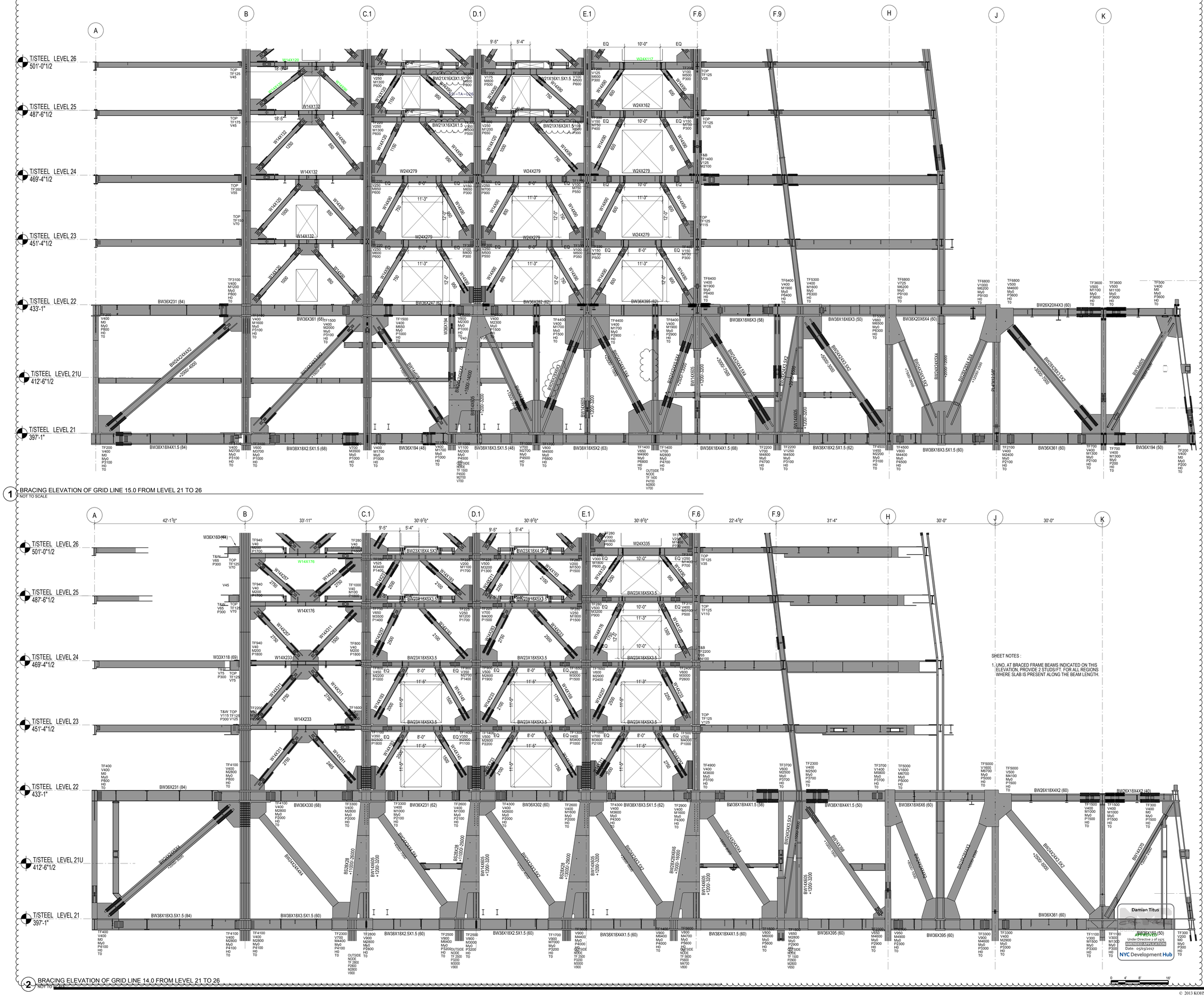

1 BRACING ELEVATION OF GRID LINE 15.0 FROM LEVEL 21 TO 26
NOT TO SCALE

2 BRACING ELEVATION OF GRID LINE 14.0 FROM LEVEL 21 TO 26
NOT TO SCALE

SHEET NOTES :

1. UNO, AT BRACED FRAME BEAMS INDICATED ON THIS ELEVATION, PROVIDE 2 STUDS/FT. FOR ALL REGIONS WHERE SLAB IS PRESENT ALONG THE BEAM LENGTH.

HUDSON YARDS - RETAIL PODIUM AND TOWER A

500 WEST 33RD STREET
New York, NY

Client
Related Companies
60 Columbus Circle
New York, NY 10023
TEL: 212.801.1000 FAX: 212.801.1048

Oxford Properties Group
320 Park Avenue, 17th Floor
New York, NY 10022
TEL: 212.986.7514 FAX: 212.986.7510

Architect
Kohn Pedersen Fox Associates
11 West 42nd Street
New York, New York 10036
TEL: 212.977.6500 FAX: 212.956.2526

Structural Engineer
Thornton Tomasetti, Inc.
51 Madison Avenue
New York, New York 10010
TEL: 917.661.7800 FAX: 718.661.7801

Mechanical, Electrical, Plumbing, Fire Protection
Jaros Baum & Bolles Consulting Engineers
80 Pine Street
New York, NY 10013
TEL: 212.530.9300 FAX: 212.269.5894

Retail Interior Design & Planning
Elkus-Manfredi
300 A Street
Boston, MA 02210
TEL: 617.426.1300

No.	Description	Date
2	D.O.B AMENDMENT #2	10/15/2016
1	D.O.B BUILDING PERMIT FILING	12/10/2014

Key Plan

09 06 03
08 05 02
07 04 01

Issue Date 12/10/2014
Project No. N11328.00
Drawn By:
Sheet Number

Damian Titus
LICENSED PROFESSIONAL ENGINEER
STATE OF NEW YORK

AMENDED
Under Directive 2 of 9/07
AMENDED APPLICATION
Date: 05/01/2017
NYC Development Hub

HYE-TA-S2-5055
Drawing Title

SKY LOBBY EAST-WEST BRACING SECTIONS

Drawing Number
S2-5055
R-Scan Drawing Number
S-475.01

SHEET 235 OF 443

© 2013 KOHN PEDERSEN FOX ASSOCIATES PC. All rights reserved.

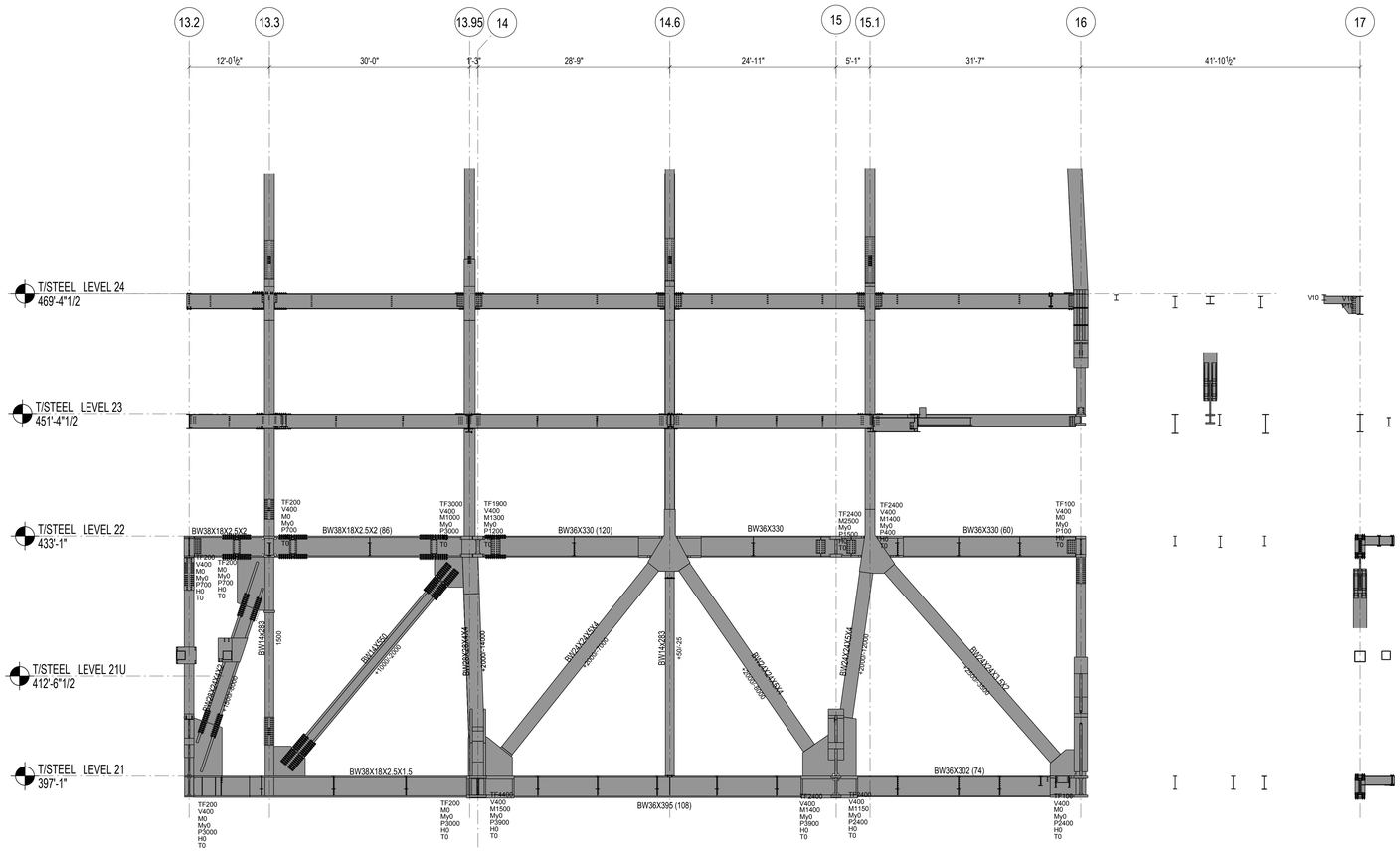

1 BRACING ELEVATION OF GRID LINE H.8 FROM LEVEL 21 TO 26
NOT TO SCALE

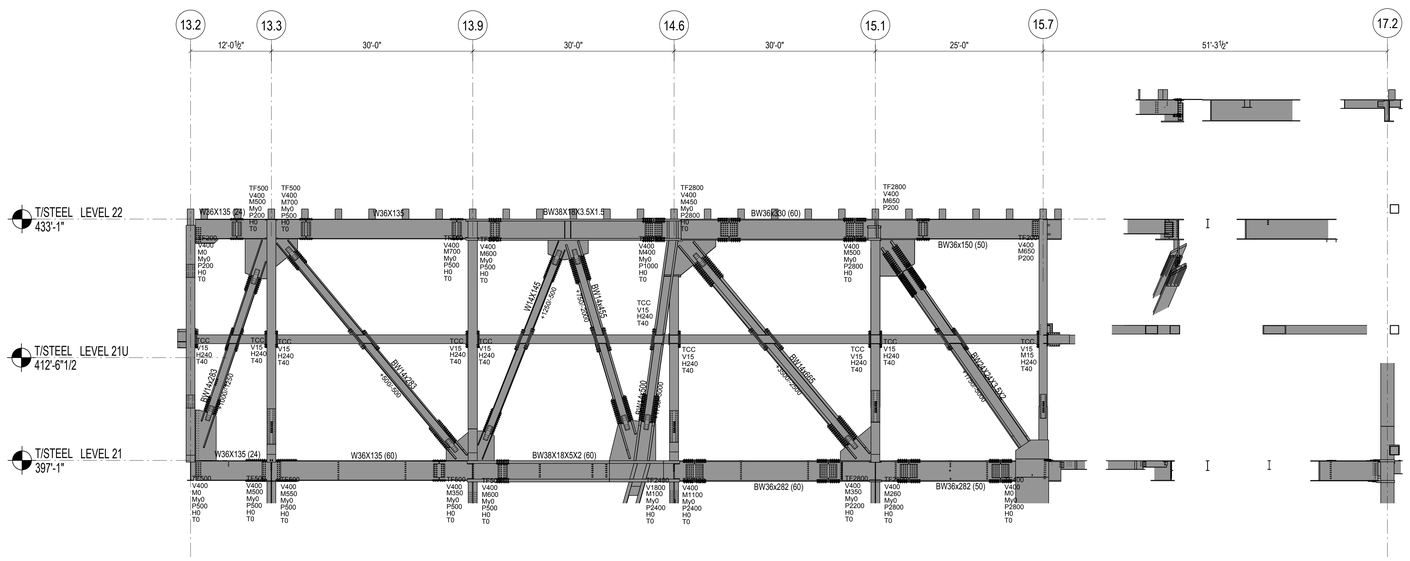

2 BRACING ELEVATION OF GRID LINE HS FROM LEVEL 21 TO 26
NOT TO SCALE

SHEET NOTES :

1. UNO, AT BRACED FRAME BEAMS INDICATED ON THIS ELEVATION, PROVIDE 2 STUDS/FT. FOR ALL REGIONS WHERE SLAB IS PRESENT ALONG THE BEAM LENGTH.

HUDSON YARDS - RETAIL PODIUM AND TOWER A
500 WEST 33RD STREET
New York, NY

Client
Related Companies
60 Columbus Circle
New York, NY 10023
TEL: 212.801.1000 FAX: 212.801.1048

Oxford Properties Group
320 Park Avenue, 17th Floor
New York, NY 10022
TEL: 212.986.7514 FAX: 212.986.7510

Architect
Kohn Pedersen Fox Associates
11 West 42nd Street
New York, New York 10036
TEL: 212.977.6500 FAX: 212.956.2526

Structural Engineer
Thornton Tomasetti, Inc.
51 Madison Avenue
New York, New York 10010
TEL: 917.661.7800 FAX: 718.661.7801

Mechanical, Electrical, Plumbing, Fire Protection
Jaros Baum & Bolles Consulting Engineers
80 Pine Street
New York, NY 10013
TEL: 212.530.9300 FAX: 212.269.5894

Retail Interior Design & Planning
Elkus-Manfredi
300 A Street
Boston, MA 02210
TEL: 617.426.1300

No.	Description	Date
1	D.O.B AMENDMENT #2	10/15/2016

Key Plan

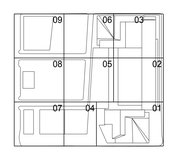

Issue Date 10/15/2016
Project No. N11328.00
Drawn By
Sheet Number

HYE-TA-S2-5056
Drawing Title

SKY LOBBY NORTH SOUTH BRACING SECTIONS

Drawing Number
S2-5056
X-Scan Drawing Number
S-476.00

SHEET 236 OF 443

Damian Titus
Buildings
APPROVED
Under Directive 2 of 1975
AMENDED APPLICATION
Date: 05/03/2017
NYC Development Hub

0 4' 8' 16'

© 2013 KOHN PEDERSEN FOX ASSOCIATES PC. All rights reserved.

DEPT OF BLDGS 121186251 Job Number
ES985273656 Scan Code

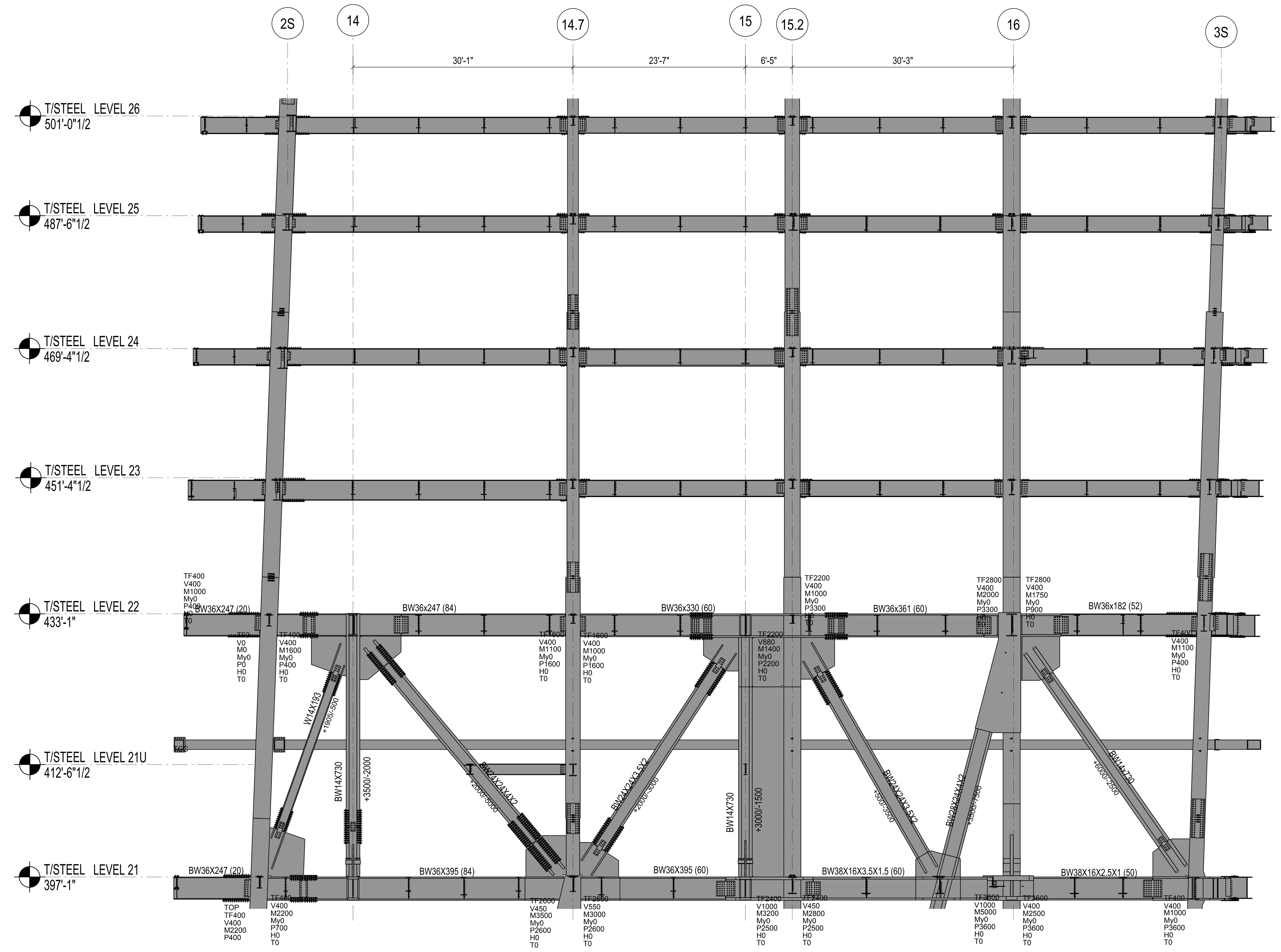

1 EL. ON GRID A
NOT TO SCALE

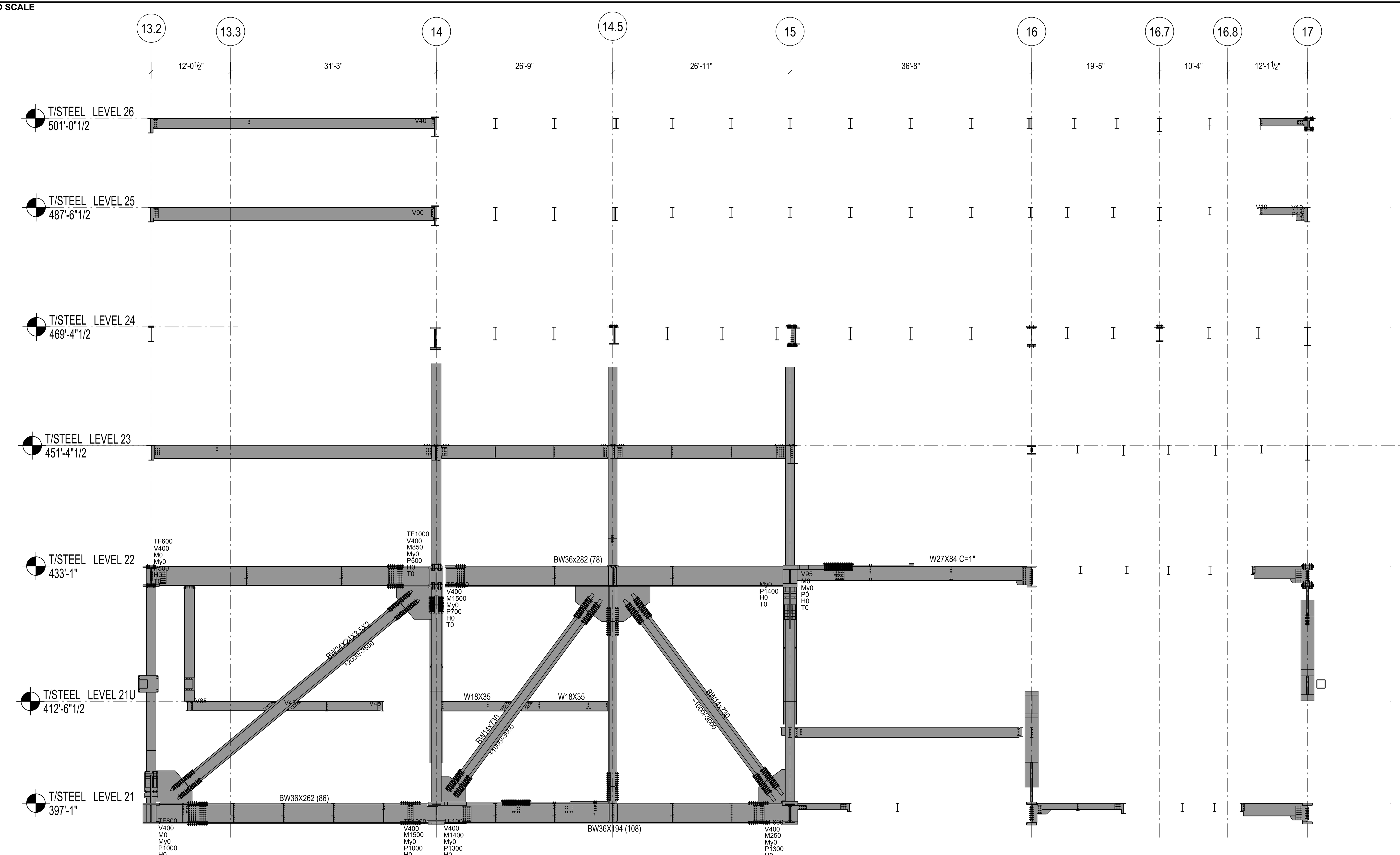

2 EL. ON GRID G.1
NOT TO SCALE

SHEET NOTES :

1. UNO, AT BRACED FRAME BEAMS INDICATED ON THIS ELEVATION, PROVIDE 2 STUDS/FT. FOR ALL REGIONS WHERE SLAB IS PRESENT ALONG THE BEAM LENGTH.

Damian Titus
Buildings
APPROVED
Under Directive 2 of 1975
AMENDED APPLICATION
Date: 05/03/2017
NYC Development Hub

0 4' 8' 16'

HUDSON YARDS - RETAIL PODIUM AND TOWER A
500 WEST 33RD STREET
New York, NY

Client
Related Companies
60 Columbus Circle
New York, NY 10023
TEL: 212.801.1000 FAX: 212.801.1048

Oxford Properties Group
320 Park Avenue, 17th Floor
New York, NY 10022
TEL: 212.986.7514 FAX: 212.986.7510

Architect
Kohn Pedersen Fox Associates
11 West 42nd Street
New York, New York 10036
TEL: 212.977.6500 FAX: 212.956.2526

Structural Engineer
Thornton Tomasetti, Inc.
51 Madison Avenue
New York, New York 10010
TEL: 917.661.7800 FAX: 718.661.7801

Mechanical, Electrical, Plumbing, Fire Protection
Jaros Baum & Bolles Consulting Engineers
80 Pine Street
New York, NY 10013
TEL: 212.530.9300 FAX: 212.269.5894

Retail Interior Design & Planning
Elkus-Manfredi
300 A Street
Boston, MA 02210
TEL: 617.426.1300

No.	Description	Date
1	D.O.B AMENDMENT #2	10/15/2016

Key Plan

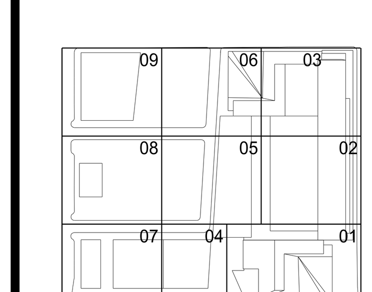

Issue Date 10/15/2016
Project No. N11328.00
Drawn By
Sheet Number

STATE OF NEW YORK
MICHAEL J. SQUARZINI
LICENSED PROFESSIONAL ENGINEER

HYE-TA-S2-5057
Drawing Title

SKY LOBBY NORTH SOUTH BRACING SECTIONS

Drawing Number
S2-5057
B-Scan Drawing Number
S-477.00
SHEET 237 OF 443

© 2013 KOHN PEDERSEN FOX ASSOCIATES PC. All rights reserved.

DEPT OF BLDGS 121186251 Job Number
ES531997349 Scan Code

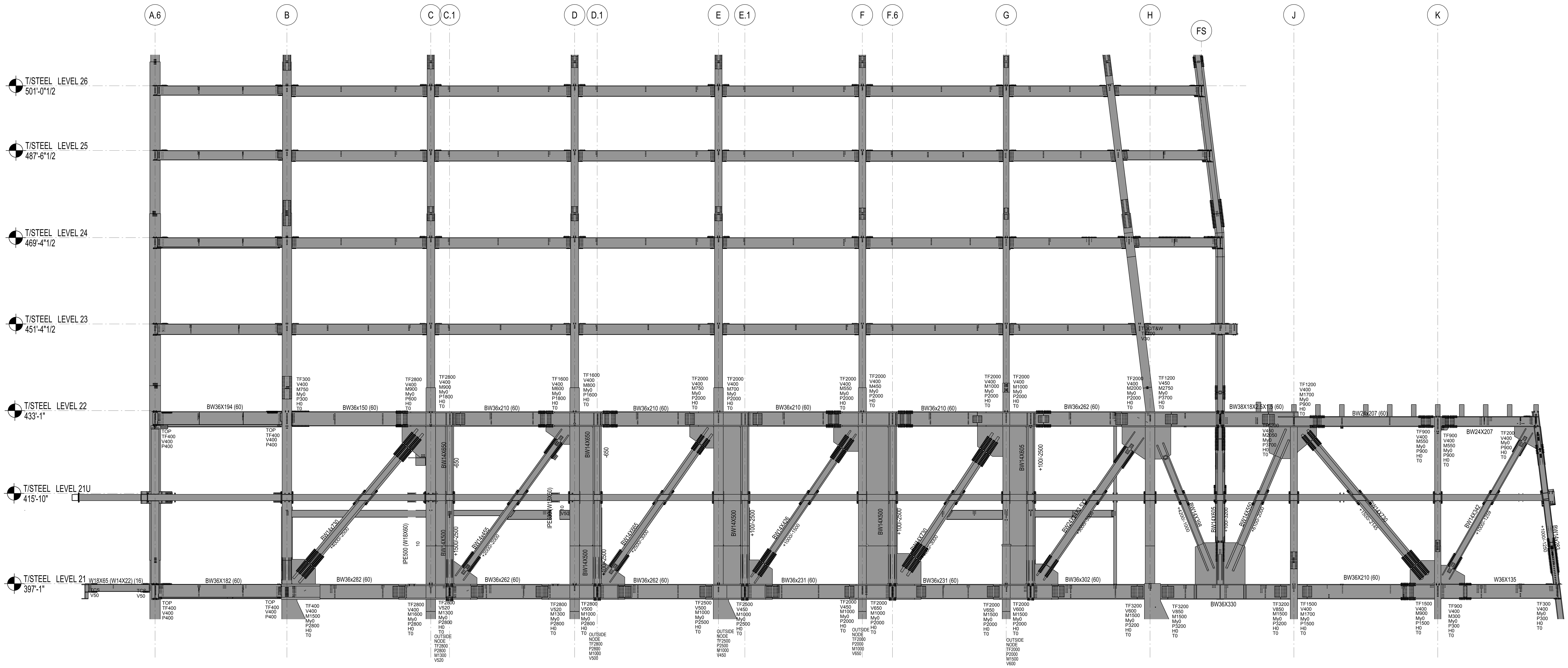

1 BRACING ELEVATION OF GRID LINE 13.0 FROM LEVEL 21 TO 26

NOT TO SCALE

SHEET NOTES :

1. UNO, AT BRACED FRAME BEAMS INDICATED ON THIS ELEVATION, PROVIDE 2 STUDS/FT. FOR ALL REGIONS WHERE SLAB IS PRESENT ALONG THE BEAM LENGTH.

HUDSON YARDS - RETAIL PODIUM AND TOWER A

500 WEST 33RD STREET
New York, NY

Client
Related Companies
60 Columbus Circle
New York, NY 10023
TEL: 212.801.1000 FAX: 212.801.1048

Oxford Properties Group
320 Park Avenue, 17th Floor
New York, NY 10022
TEL: 212.986.7514 FAX: 212.986.7510

Architect
Kohn Pedersen Fox Associates
11 West 42nd Street
New York, New York 10036
TEL: 212.977.6500 FAX: 212.956.2526

Structural Engineer
Thornton Tomasetti, Inc.
51 Madison Avenue
New York, New York 10010
TEL: 917.661.7800 FAX: 718.661.7801

Mechanical, Electrical, Plumbing, Fire Protection
Jaros Baum & Bolles Consulting Engineers
80 Pine Street
New York, NY 10013
TEL: 212.530.9300 FAX: 212.269.5894

Retail Interior Design & Planning
Elkus-Manfredi
300 A Street
Boston, MA 02210
TEL: 617.426.1300

No.	Description	Date
1	D.O.B AMENDMENT #2	10/15/2016

Key Plan

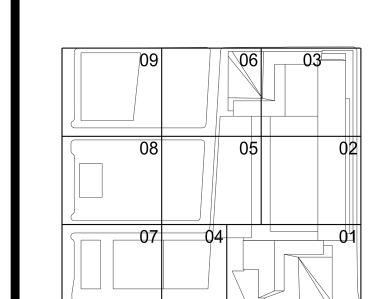

Issue Date 10/15/2016
Project No. N11328.00
Drawn By
Sheet Number

STATE OF NEW YORK MICHAEL J. SQUARZINI LICENSED PROFESSIONAL ENGINEER No. 080640

HYE-TA-S2-5058

Drawing Title

SKY LOBBY
EAST-WEST BRACING SECTIO

Drawing Number
S2-5058
B-Scan Drawing Number
S-478.00

SHEET 238 OF 443

Damian Titus
Buildings
APPROVED
Under Directive 2 of 1975
AMENDED APPLICATION
Date: 05/03/2017
NYC Development Hub

0 4' 8' 16'

© 2013 KOHN PEDERSEN FOX ASSOCIATES PC. All rights reserved.

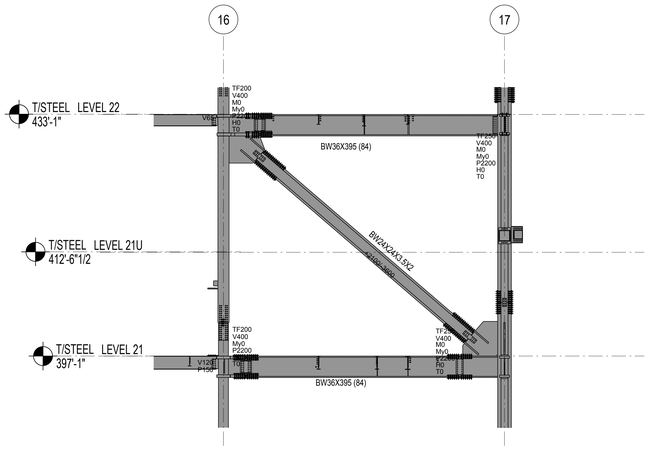

1 BRACING ELEVATION OF GRID LINE G.6 FROM LEVEL 21 TO 22

1/8" = 1'-0"

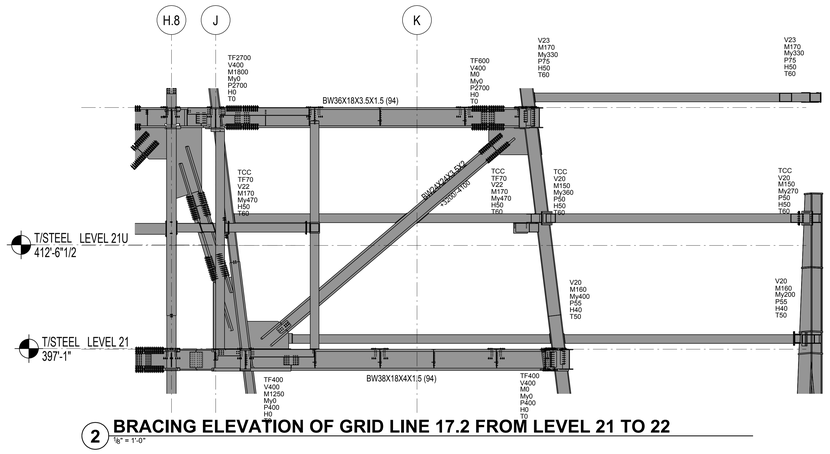

2 BRACING ELEVATION OF GRID LINE 17.2 FROM LEVEL 21 TO 22

1/8" = 1'-0"

SHEET NOTES :

1. UNO, AT BRACED FRAME BEAMS INDICATED ON THIS ELEVATION, PROVIDE 2 STUDS/FT. FOR ALL REGIONS WHERE SLAB IS PRESENT ALONG THE BEAM LENGTH.

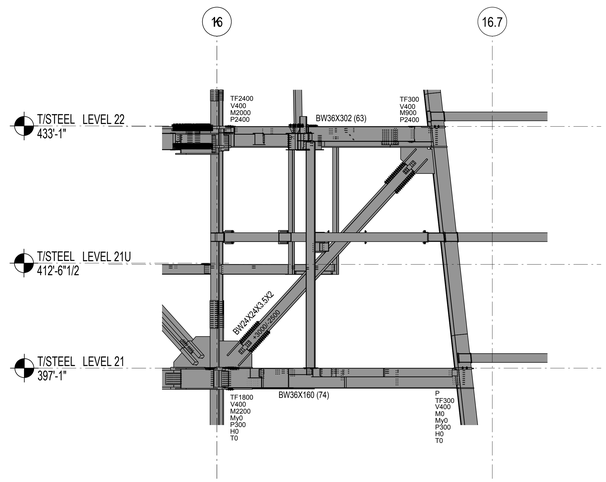

3 BRACING ELEVATION OF GRID LINE 16 FROM LEVEL 21 TO 22

1/8" = 1'-0"

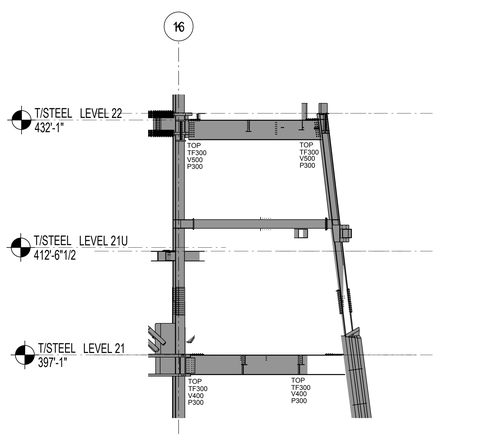

4 BRACING ELEVATION OF GRID LINE 15.9 FROM LEVEL 21 TO 22

1/8" = 1'-0"

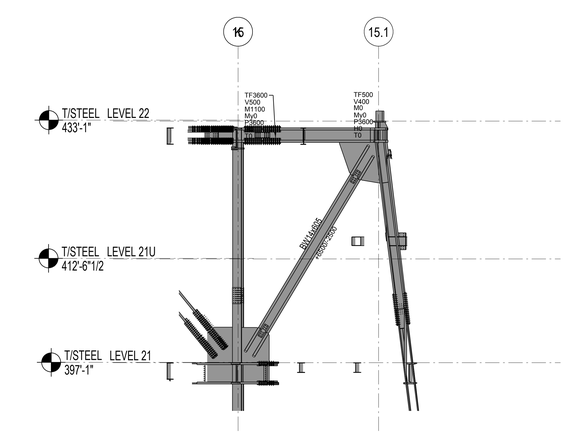

5 BRACING ELEVATION OF GRID LINE 15.1 FROM LEVEL 21 TO 22

1/8" = 1'-0"

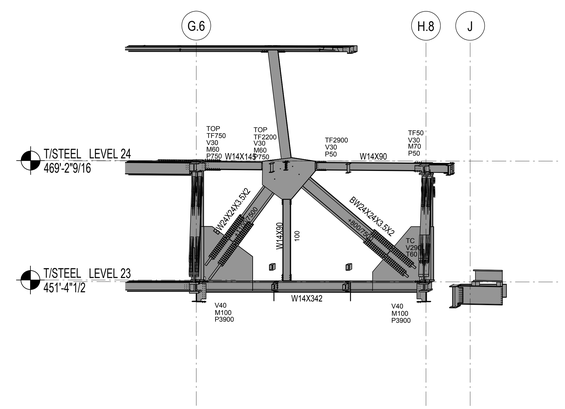

6 BRACING ELEVATION OF GRID LINE 16.5 FROM LEVEL 23 TO 25

1/8" = 1'-0"

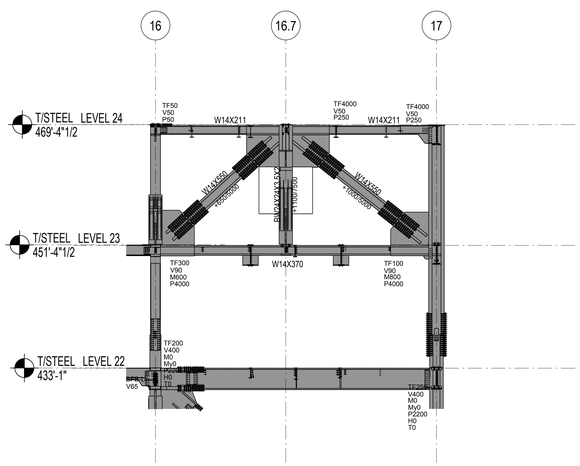

7 BRACING ELEVATION OF GRID LINE G.8 FROM LEVEL 22 TO 24

1/8" = 1'-0"

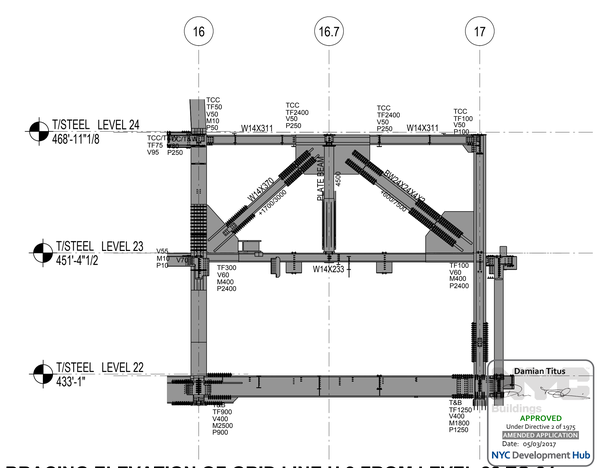

8 BRACING ELEVATION OF GRID LINE H.8 FROM LEVEL 22 TO 24

1/8" = 1'-0"

0 4' 8' 16'

Damian Titus
Building
APPROVED
Under Directive 2 of 1975
AMENDED APPLICATION
Date: 05/03/2017
NYC Development Hub

HUDSON YARDS - RETAIL PODIUM AND TOWER A

500 WEST 33RD STREET
New York, NY

Client
Related Companies
60 Columbus Circle
New York, NY 10023
TEL: 212.801.1000 FAX: 212.801.1048

Oxford Properties Group
320 Park Avenue, 17th Floor
New York, NY 10022
TEL: 212.986.7514 FAX: 212.986.7510

Architect
Kohn Pedersen Fox Associates
11 West 42nd Street
New York, New York 10036
TEL: 212.977.6500 FAX: 212.956.2526

Structural Engineer
Thornton Tomasetti, Inc.
51 Madison Avenue
New York, New York 10010
TEL: 917.661.7800 FAX: 718.661.7801

Mechanical, Electrical, Plumbing, Fire Protection
Jaros Baum & Bolles Consulting Engineers
80 Pine Street
New York, NY 10013
TEL: 212.530.9300 FAX: 212.269.5894

Retail Interior Design & Planning
Elkus-Manfredi
300 A Street
Boston, MA 02210
TEL: 617.426.1300

No.	Description	Date
1	D.O.B AMENDMENT #2	10/15/2016

Key Plan

09 06 03
08 05 02
07 04 01

Issue Date 10/15/2016
Project No. N11328.00
Drawn By
Sheet Number

HYE-TA-S2-5059

Drawing Title

SKY LOBBY BRACING SECTIONS

Drawing Number
S2-5059
X-Scan Drawing Number
S-479.00

SHEET 239 OF 443

© 2013 KOHN PEDERSEN FOX ASSOCIATES PC. All rights reserved.

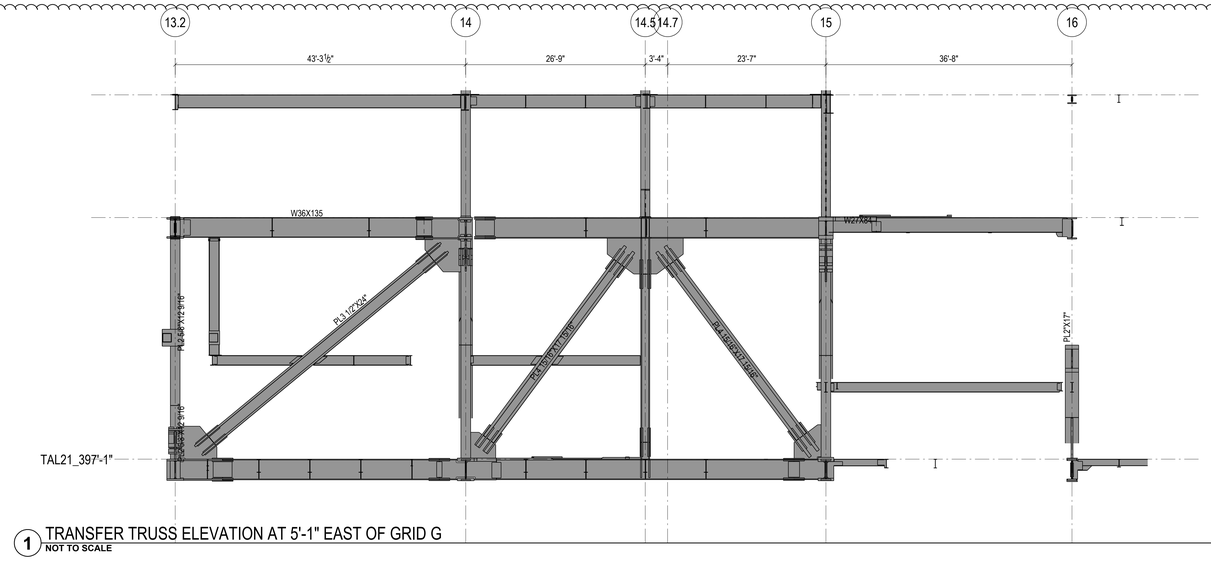

1 TRANSFER TRUSS ELEVATION AT 5'-1" EAST OF GRID G
NOT TO SCALE

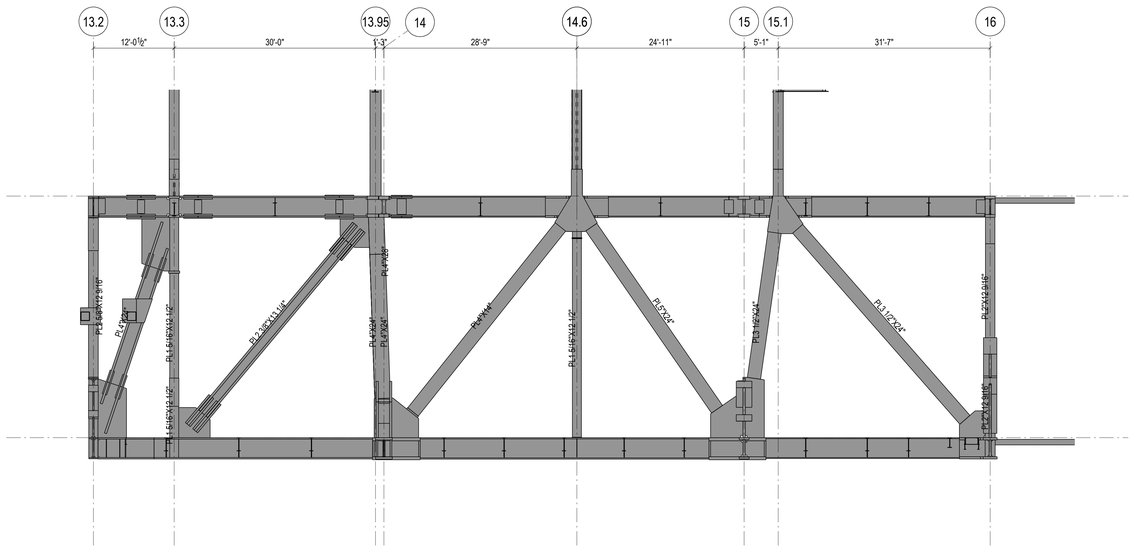

2 TRANSFER TRUSS ELEVATION AT 14'-7" EAST OF GRID H
NOT TO SCALE

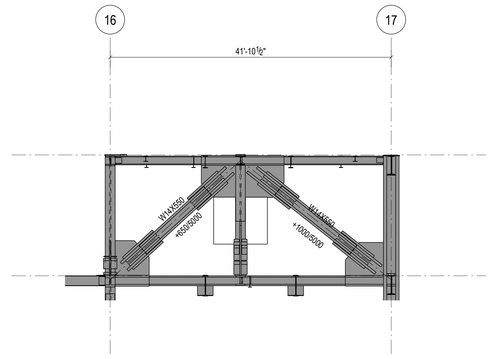

3 TRUSS ELEVATION AT GRID G.6
NOT TO SCALE

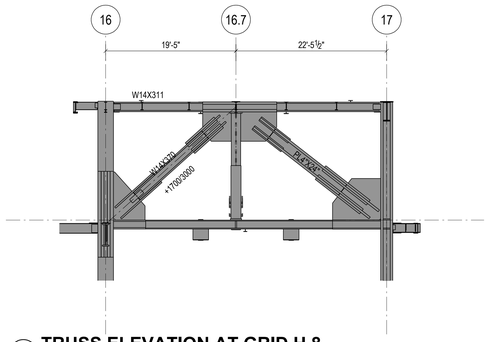

4 TRUSS ELEVATION AT GRID H.8
NOT TO SCALE

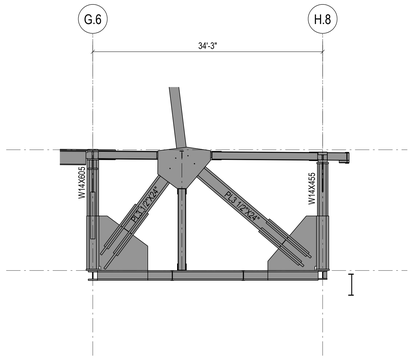

5 TRUSS ELEVATION AT GRID 16.3
NOT TO SCALE

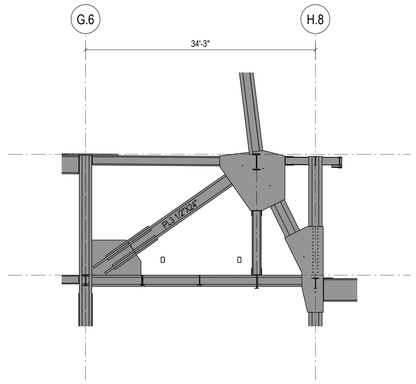

6 TRUSS ELEVATION AT GRID 16
NOT TO SCALE

Damian Titus
Buildings
APPROVED
Under Directive 2 of 1975
MUNICIPAL REGULATIONS
Date: 05/03/2017
NYC Development Hub

HUDSON YARDS - RETAIL PODIUM AND TOWER A
500 WEST 33RD STREET
New York, NY

Client
Related Companies
60 Columbus Circle
New York, NY 10023
TEL: 212.801.1000 FAX: 212.801.1048

Oxford Properties Group
320 Park Avenue, 17th Floor
New York, NY 10022
TEL: 212.986.7514 FAX: 212.986.7510

Architect
Kohn Pedersen Fox Associates
11 West 42nd Street
New York, New York 10036
TEL: 212.977.6500 FAX: 212.956.2526

Structural Engineer
Thornton Tomasetti, Inc.
51 Madison Avenue
New York, New York 10010
TEL: 917.661.7800 FAX: 718.661.7801

Mechanical, Electrical, Plumbing, Fire Protection
Jaros Baum & Bolles Consulting Engineers
80 Pine Street
New York, NY 10013
TEL: 212.530.9300 FAX: 212.269.5894

Retail Interior Design & Planning
Elkus-Manfredi
300 A Street
Boston, MA 02210
TEL: 617.426.1300

No.	Description	Date
2	D.O.B AMENDMENT #2	10/15/2016
1	D.O.B BUILDING PERMIT FILING	12/10/2014

Key Plan

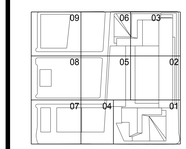

Issue Date 12/10/2014
Project No. N11328.00
Drawn By
Sheet Number

HYE-TA-S2-6000
Drawing Title

TOWER A
TRUSS ELEVATIONS

Drawing Number
S2-6000
X-Ref Drawing Number
S-480.01

© 2013 KOHN PEDERSEN FOX ASSOCIATES PC. All rights reserved.

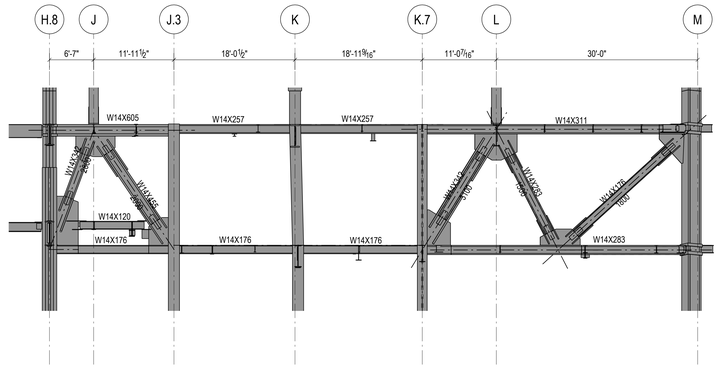

1 TRUSS ELEVATION AT GRID 16.5
NOT TO SCALE

Damian Titus
Buildings
APPROVED
Under Directive 2 of 1975
MUNICIPAL REGULATIONS
Date: 05/03/2017
NYC Development Hub

HUDSON YARDS - RETAIL PODIUM AND TOWER A

500 WEST 33RD STREET
New York, NY

Client
Related Companies
60 Columbus Circle
New York, NY 10023
TEL: 212.801.1000 FAX: 212.801.1048

Oxford Properties Group
320 Park Avenue, 17th Floor
New York, NY 10022
TEL: 212.986.7514 FAX: 212.986.7510

Architect
Kohn Pedersen Fox Associates
11 West 42nd Street
New York, New York 10036
TEL: 212.977.6500 FAX: 212.956.2526

Structural Engineer
Thornton Tomasetti, Inc.
51 Madison Avenue
New York, New York 10010
TEL: 917.661.7800 FAX: 718.661.7801

Mechanical, Electrical, Plumbing, Fire Protection
Jaros Baum & Bolles Consulting Engineers
80 Pine Street
New York, NY 10013
TEL: 212.530.9300 FAX: 212.269.5894

Retail Interior Design & Planning
Elkus-Manfredi
300 A Street
Boston, MA 02210
TEL: 617.426.1300

No.	Description	Date
2	D.O.B AMENDMENT #2	10/15/2016
1	D.O.B BUILDING PERMIT FILING	12/10/2014

Key Plan

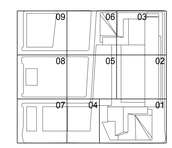

Issue Date 12/10/2014
Project No. N11328.00
Drawn By
Sheet Number

HYE-TA-S2-6001
Drawing Title

TOWER A
TRUSS ELEVATIONS

Drawing Number
S2-6001
KPF Drawing Number

S-481.01

© 2013 KOHN PEDERSEN FOX ASSOCIATES PC. All rights reserved.

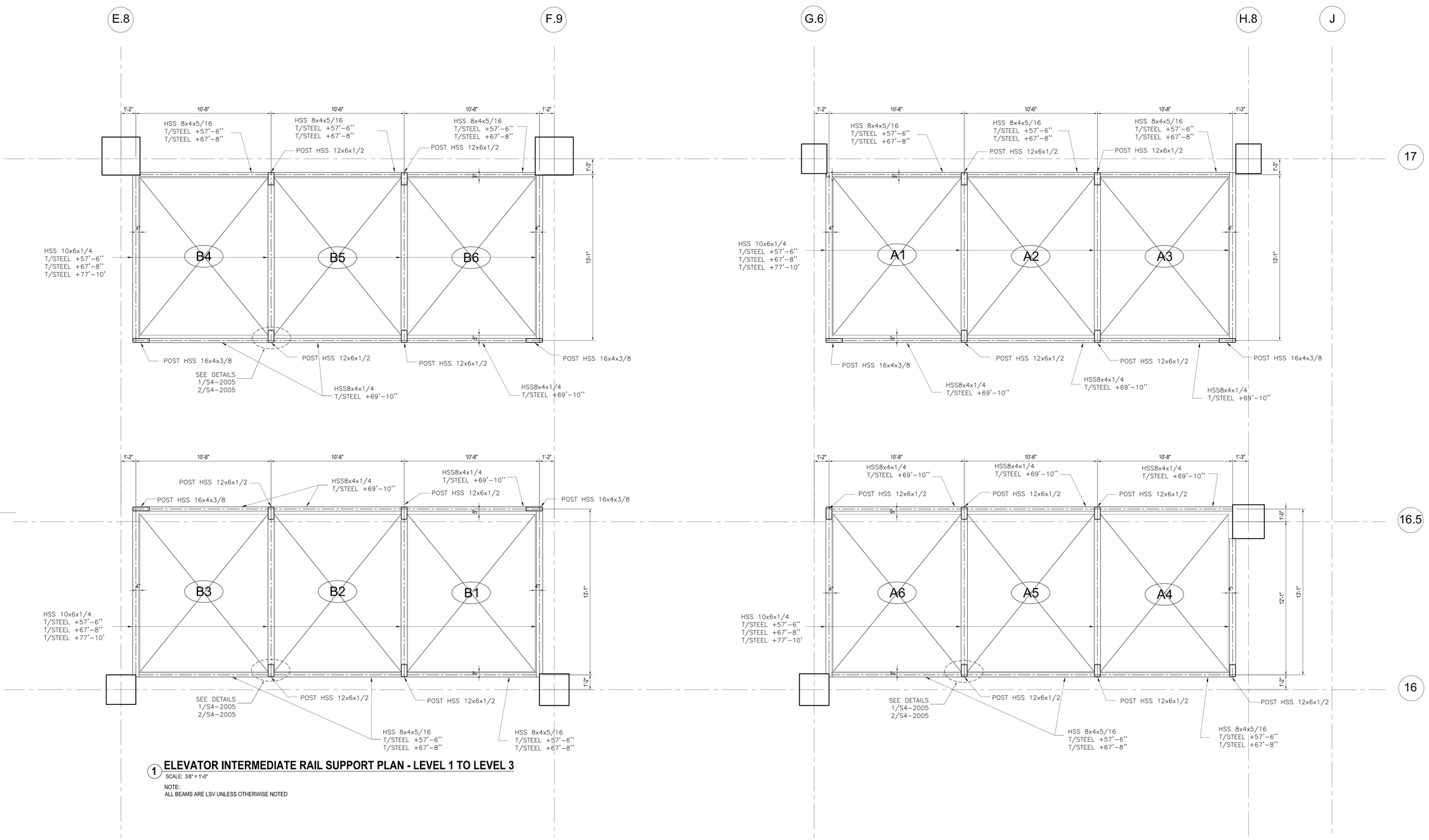

1 **ELEVATOR INTERMEDIATE RAIL SUPPORT PLAN - LEVEL 1 TO LEVEL 3**

SCALE: 3/8" = 1'-0"

NOTE:
ALL BEAMS ARE LSV UNLESS OTHERWISE NOTED

RAIL SUPPPORT FORCES PROVIDED BY OTIS 3/25/2015

CALCULATED (Lbs)			
		A1-A6	B1-B6
		CAR	
R1	SAFETY	1282	1244
R1	RUNNING	----	----
R2	LOADING	255	238
Vx	SEISMIC	3144	3144
Vy	SEISMIC	1572	1572
		CWT.	
R1	SAFETY	775	775
R1	RUNNING	----	----
R2	LOADING	83	83
Vx	SEISMIC	3321	3321
Vy	SEISMIC	1661	1661

Damian Titus
Buildings
APPROVED
Under Directive 2 of 1975
AMENDED APPLICATION
Date: 05/03/2017
NYC Development Hub

HUDSON YARDS - RETAIL PODIUM AND TOWER A

500 WEST 33RD STREET
New York, NY

Client
Related Companies
60 Columbus Circle
New York, NY 10023
TEL: 212.801.1000 FAX: 212.801.1048

Oxford Properties Group
320 Park Avenue, 17th Floor
New York, NY 10022
TEL: 212.986.7514 FAX: 212.986.7510

Architect
Kohn Pedersen Fox Associates
11 West 42nd Street
New York, New York 10036
TEL: 212.977.6500 FAX: 212.956.2526

Structural Engineer
Thornton Tomasetti, Inc.
51 Madison Avenue
New York, New York 10010
TEL: 917.661.7800 FAX: 718.661.7801

Mechanical, Electrical, Plumbing, Fire Protection
Jaros Baum & Bolles Consulting Engineers
80 Pine Street
New York, NY 10013
TEL: 212.530.9300 FAX: 212.269.5894

Retail Interior Design & Planning
Elkus-Manfredi
300 A Street
Boston, MA 02210
TEL: 617.426.1300

No.	Description	Date
1	D.O.B. AMENDMENT #2	10/15/2016

Key Plan

Issue Date: 10/15/2016
Project No. N11328.00
Drawn By Author
Sheet Number

Drawing Title
TOWER A ELEVATOR INTERMEDIATE SUPPORT PART PLANS I

Drawing Number
S3-6101
B-Scan Drawing Number
S-482.00

© 2015 KOHN PEDERSEN FOX ASSOCIATES PC. All rights reserved.

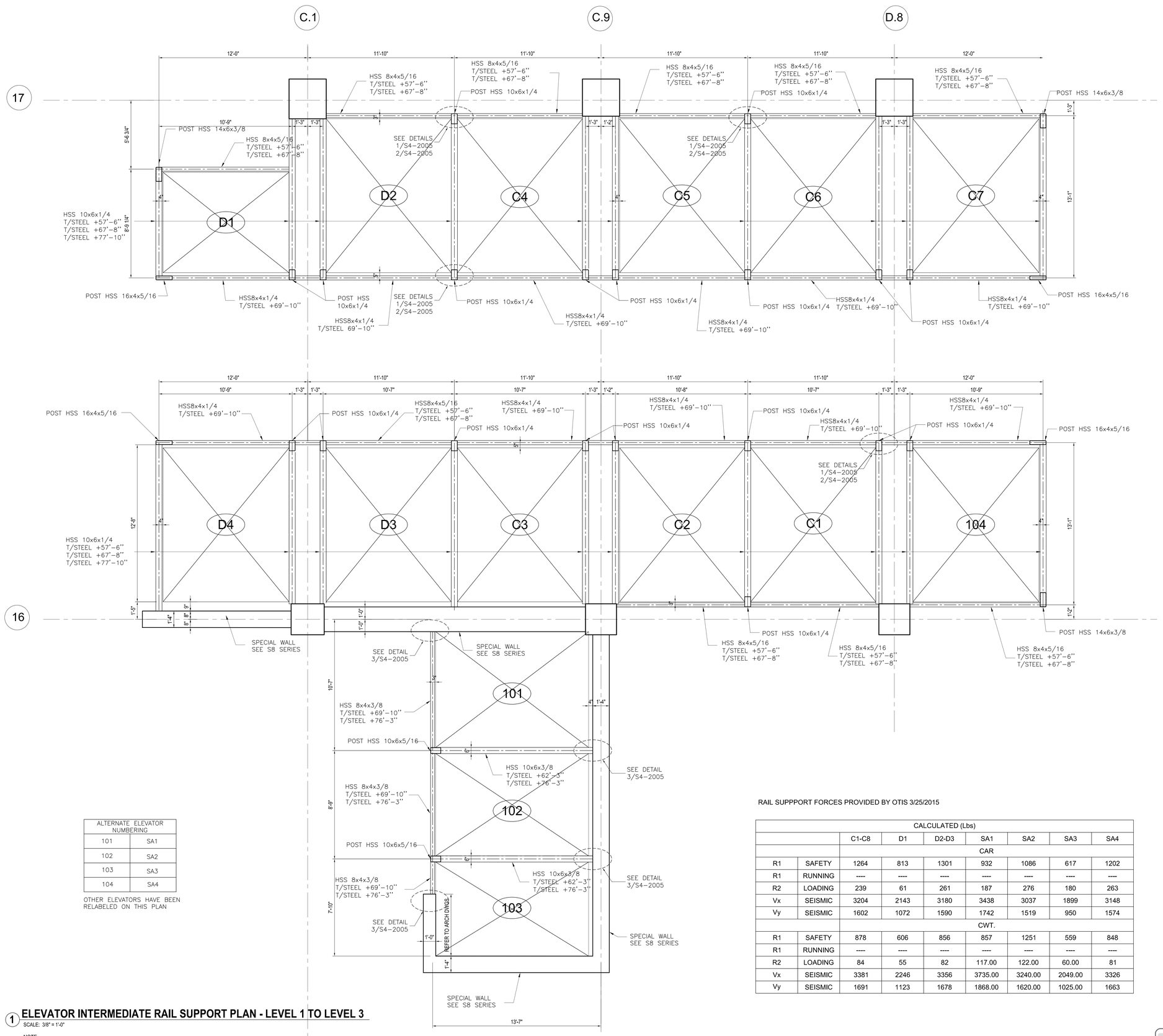

ALTERNATE ELEVATOR NUMBERING	
101	SA1
102	SA2
103	SA3
104	SA4

OTHER ELEVATORS HAVE BEEN RELABELED ON THIS PLAN

RAIL SUPPPORT FORCES PROVIDED BY OTIS 3/25/2015

CALCULATED (Lbs)								
		C1-C8	D1	D2-D3	SA1	SA2	SA3	SA4
		CAR						
R1	SAFETY	1264	813	1301	932	1086	617	1202
R1	RUNNING	----	----	----	----	----	----	----
R2	LOADING	239	61	261	187	276	180	263
Vx	SEISMIC	3204	2143	3180	3438	3037	1899	3148
Vy	SEISMIC	1602	1072	1590	1742	1519	950	1574
		CWT.						
R1	SAFETY	878	606	856	857	1251	559	848
R1	RUNNING	----	----	----	----	----	----	----
R2	LOADING	84	55	82	117.00	122.00	60.00	81
Vx	SEISMIC	3381	2246	3356	3735.00	3240.00	2049.00	3326
Vy	SEISMIC	1691	1123	1678	1868.00	1620.00	1025.00	1663

1 ELEVATOR INTERMEDIATE RAIL SUPPORT PLAN - LEVEL 1 TO LEVEL 3

SCALE: 3/8" = 1'-0"

NOTE:
ALL BEAMS ARE LSV UNLESS OTHERWISE NOTED

Damian Titus
Buildings
APPROVED
Under Directive 2 of 1975
AMENDED APPLICATION
Date: 05/03/2017
NYC Development Hub

HUDSON YARDS - RETAIL PODIUM AND TOWER A
500 WEST 33RD STREET
New York, NY

Client
Related Companies
60 Columbus Circle
New York, NY 10023
TEL: 212.801.1000 FAX: 212.801.1048

Oxford Properties Group
320 Park Avenue, 17th Floor
New York, NY 10022
TEL: 212.986.7514 FAX: 212.986.7510

Architect
Kohn Pedersen Fox Associates
11 West 42nd Street
New York, New York 10036
TEL: 212.977.6500 FAX: 212.956.2526

Structural Engineer
Thornton Tomasetti, Inc.
51 Madison Avenue
New York, New York 10010
TEL: 917.661.7800 FAX: 718.661.7801

Mechanical, Electrical, Plumbing, Fire Protection
Jaros Baum & Bolles Consulting Engineers
80 Pine Street
New York, NY 10013
TEL: 212.530.9300 FAX: 212.269.5894

Retail Interior Design & Planning
Elkus-Manfredi
300 A Street
Boston, MA 02210
TEL: 617.426.1300

No.	Description	Date
1	D.O.B. AMENDMENT #2	10/15/2016

Key Plan

Issue Date: 10/15/2016
Project No. N11328.00
Drawn By: Author
Sheet Number

Drawing Title
TOWER A ELEVATOR INTERMEDIATE SUPPORT PART PLANS II

Drawing Number
S3-6102
B-Scan Drawing Number
S-483.00

© 2013 KOHN PEDERSEN FOX ASSOCIATES PC. All rights reserved.

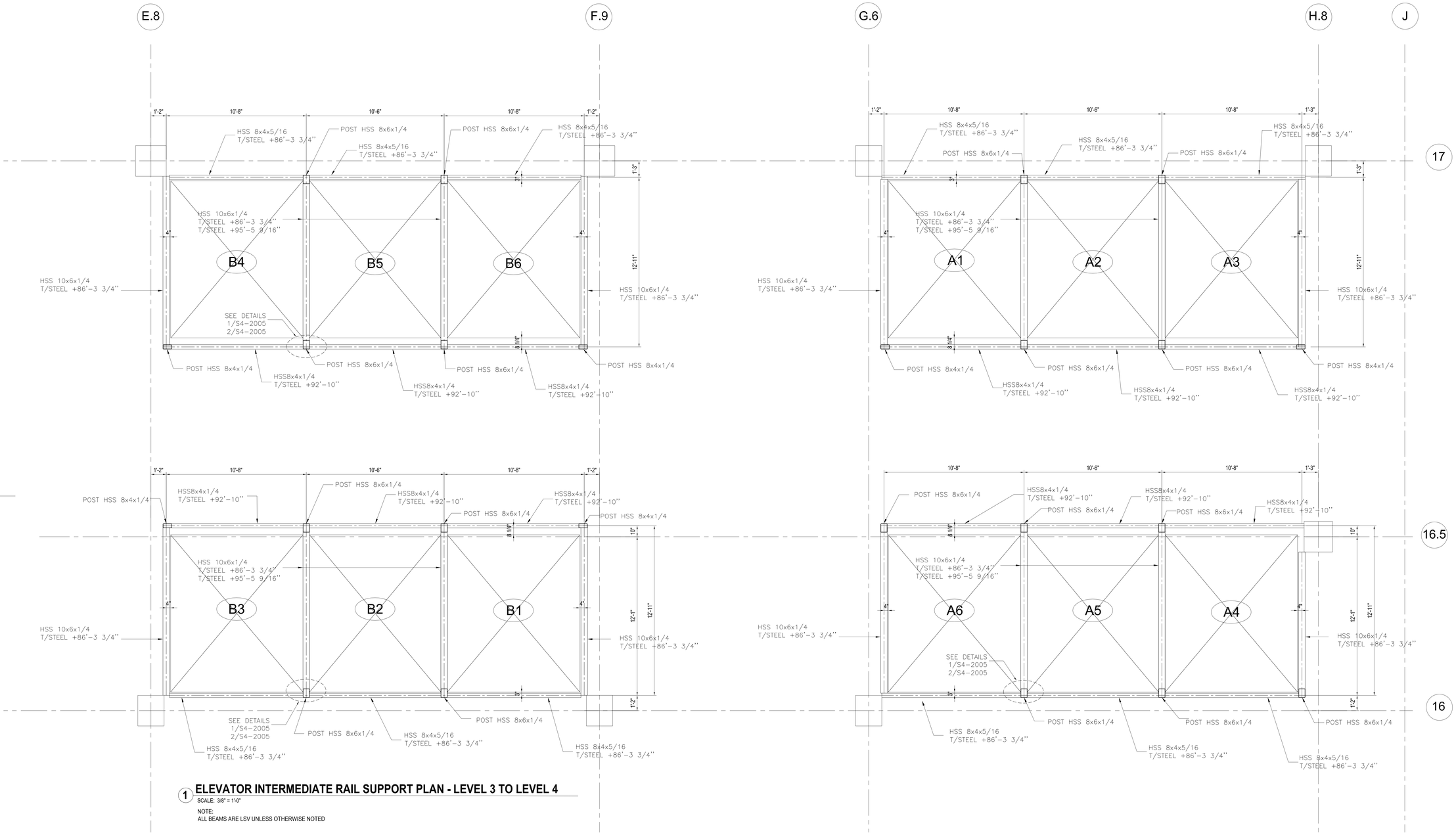

1 **ELEVATOR INTERMEDIATE RAIL SUPPORT PLAN - LEVEL 3 TO LEVEL 4**

SCALE: 3/8" = 1'-0"

NOTE:
ALL BEAMS ARE LSV UNLESS OTHERWISE NOTED

HUDSON YARDS - RETAIL PODIUM AND TOWER A

500 WEST 33RD STREET
New York, NY

Client
Related Companies
60 Columbus Circle
New York, NY 10023
TEL: 212.801.1000 FAX: 212.801.1048

Oxford Properties Group
320 Park Avenue, 17th Floor
New York, NY 10022
TEL: 212.986.7514 FAX: 212.986.7510

Architect
Kohn Pedersen Fox Associates
11 West 42nd Street
New York, New York 10036
TEL: 212.977.6500 FAX: 212.956.2526

Structural Engineer
Thornton Tomasetti, Inc.
51 Madison Avenue
New York, New York 10010
TEL: 917.661.7800 FAX: 718.661.7801

Mechanical, Electrical, Plumbing, Fire Protection
Jaros Baum & Bolles Consulting Engineers
80 Pine Street
New York, NY 10013
TEL: 212.530.9300 FAX: 212.269.5894

Retail Interior Design & Planning
Elkus-Manfredi
300 A Street
Boston, MA 02210
TEL: 617.426.1300

No.	Description	Date
1	D.O.B. AMENDMENT #2	10/15/2016

Key Plan

Issue Date: 10/15/2016
Project No. N11328.00
Drawn By: Author
Sheet Number

Damian Titus
Buildings
APPROVED
Under Directive 2 of 1975
AMENDED APPLICATION
Date: 05/03/2017
NYC Development Hub

Drawing Title
TOWER A ELEVATOR INTERMEDIATE SUPPORT PART PLANS III

Drawing Number
S3-6103
B-Scan Drawing Number
S-484.00

SHEET 280 OF 443

© 2013 KOHN PEDERSEN FOX ASSOCIATES PC. All rights reserved.

DEPT OF BLDGS 421395255 Job Number
E5423.B4.00 Scan Code

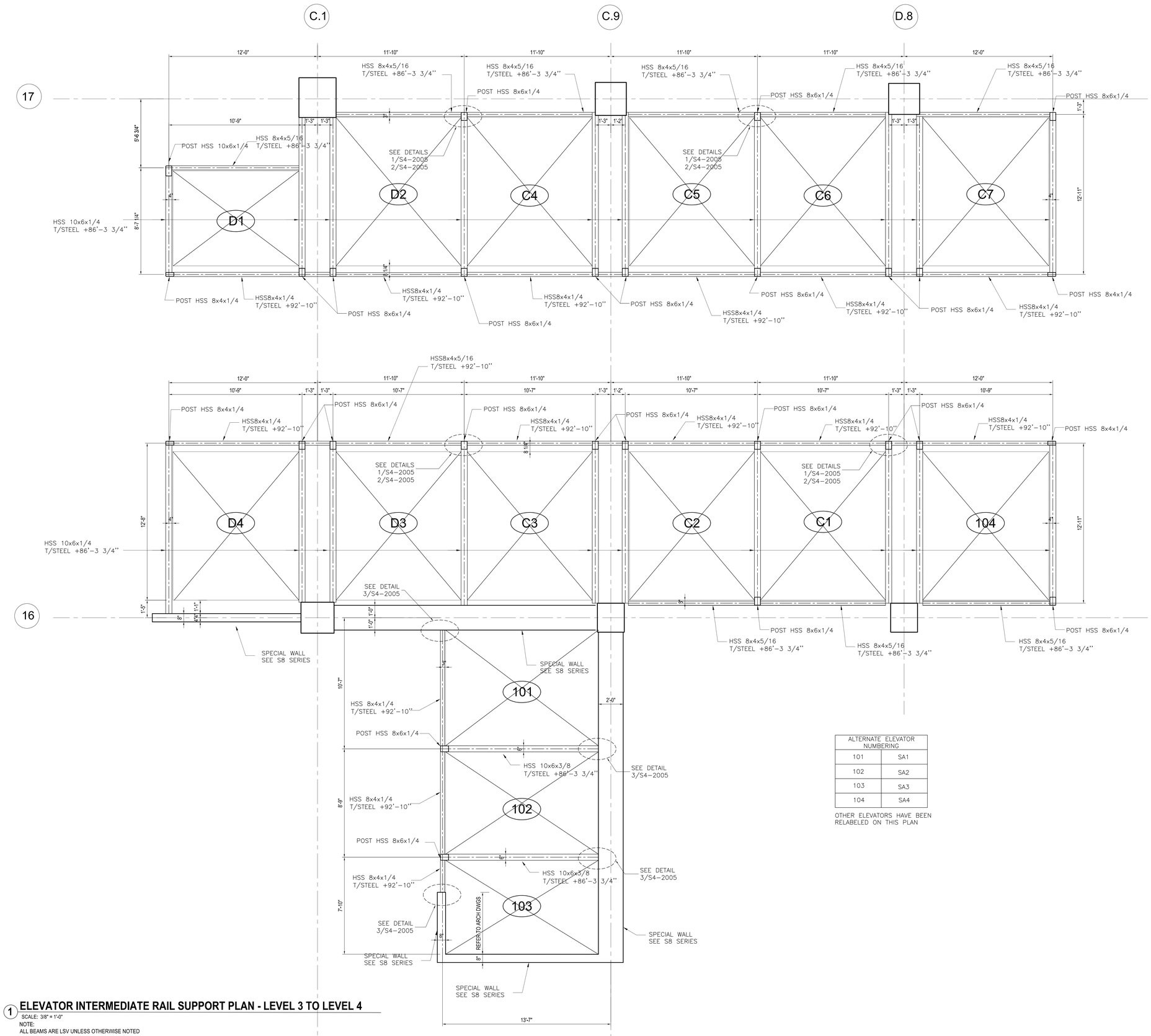

ALTERNATE ELEVATOR NUMBERING	
101	SA1
102	SA2
103	SA3
104	SA4

OTHER ELEVATORS HAVE BEEN RELABELED ON THIS PLAN

1 ELEVATOR INTERMEDIATE RAIL SUPPORT PLAN - LEVEL 3 TO LEVEL 4

SCALE: 3/8" = 1'-0"

NOTE:
ALL BEAMS ARE LSV UNLESS OTHERWISE NOTED

HUDSON YARDS - RETAIL PODIUM AND TOWER A

500 WEST 33RD STREET
New York, NY

Client
Related Companies
60 Columbus Circle
New York, NY 10023
TEL: 212.801.1000 FAX: 212.801.1048

Oxford Properties Group
320 Park Avenue, 17th Floor
New York, NY 10022
TEL: 212.986.7514 FAX: 212.986.7510

Architect
Kohn Pedersen Fox Associates
11 West 42nd Street
New York, New York 10036
TEL: 212.977.6500 FAX: 212.956.2526

Structural Engineer
Thornton Tomasetti, Inc.
51 Madison Avenue
New York, New York 10010
TEL: 917.661.7800 FAX: 718.661.7801

Mechanical, Electrical, Plumbing, Fire Protection
Jaros Baum & Bolles Consulting Engineers
80 Pine Street
New York, NY 10013
TEL: 212.530.9300 FAX: 212.269.5894

Retail Interior Design & Planning
Elkus-Manfredi
300 A Street
Boston, MA 02210
TEL: 617.426.1300

No.	Description	Date
1	D.O.B. AMENDMENT #2	10/15/2016

Key Plan

Issue Date: 10/15/2016
Project No. N11328.00
Drawn By Author
Sheet Number

STATE OF NEW YORK — ROBERT E. SILVESTRI — 049 — LICENSED PROFESSIONAL ENGINEER

Damian Titus
Buildings
APPROVED
Under Directive 1 of 1975
AMENDED APPLICATION
Date: 05/03/2017
NYC Development Hub

Drawing Title
TOWER A ELEVATOR INTERMEDIATE SUPPORT PART PLANS IV

Drawing Number
S3-6104
BCAM Drawing Number
S-485.00 SHEET 281 OF 443

© 2013 KOHN PEDERSEN FOX ASSOCIATES PC. All rights reserved.

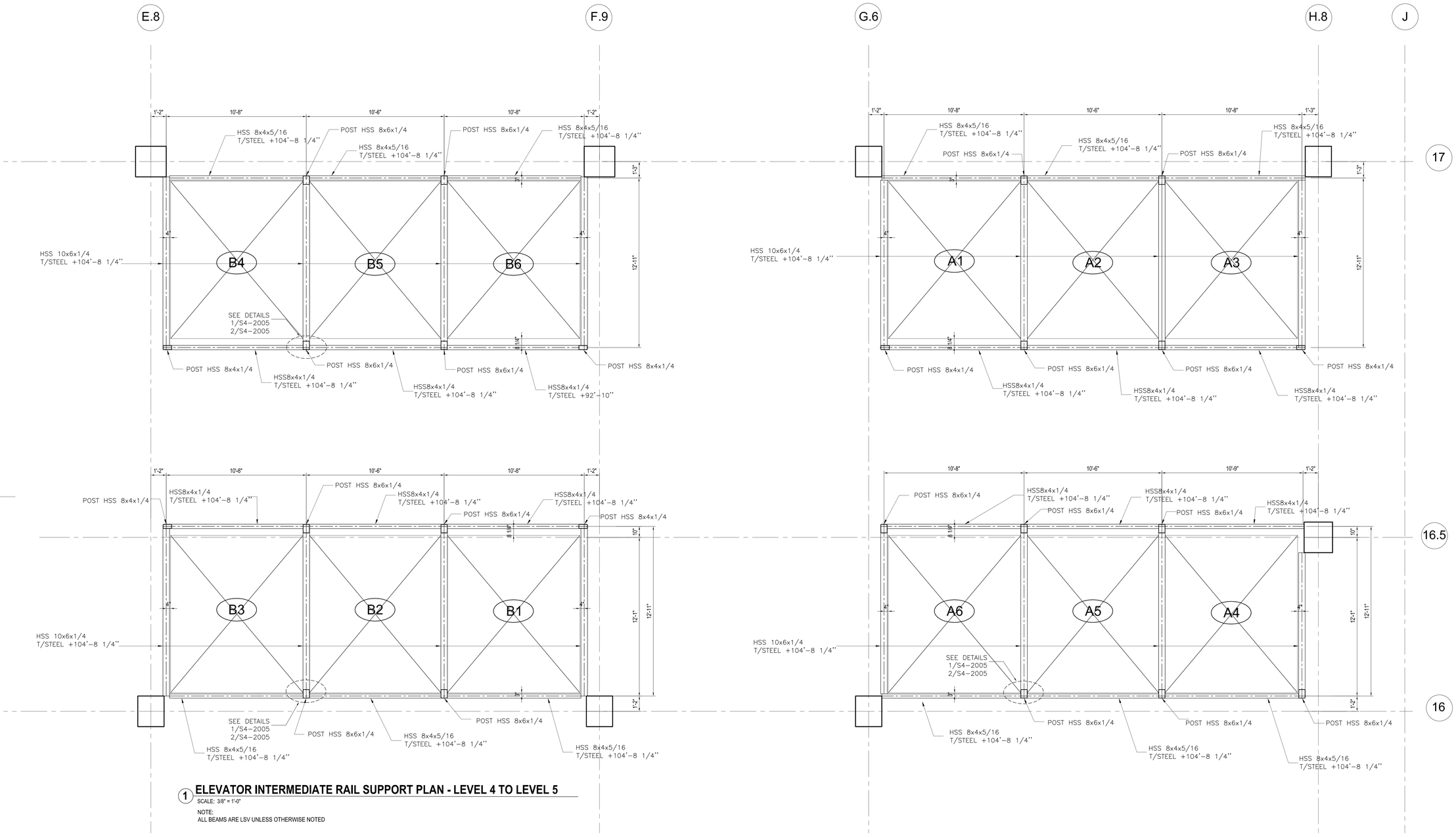

1 **ELEVATOR INTERMEDIATE RAIL SUPPORT PLAN - LEVEL 4 TO LEVEL 5**

SCALE: 3/8" = 1'-0"

NOTE:
ALL BEAMS ARE LSV UNLESS OTHERWISE NOTED

HUDSON YARDS - RETAIL PODIUM AND TOWER A

500 WEST 33RD STREET
New York, NY

Client
Related Companies
60 Columbus Circle
New York, NY 10023
TEL: 212.801.1000 FAX: 212.801.1048

Oxford Properties Group
320 Park Avenue, 17th Floor
New York, NY 10022
TEL: 212.986.7514 FAX: 212.986.7510

Architect
Kohn Pedersen Fox Associates
11 West 42nd Street
New York, New York 10036
TEL: 212.977.6500 FAX: 212.956.2526

Structural Engineer
Thornton Tomasetti, Inc.
51 Madison Avenue
New York, New York 10010
TEL: 917.661.7800 FAX: 718.661.7801

Mechanical, Electrical, Plumbing, Fire Protection
Jaros Baum & Bolles Consulting Engineers
80 Pine Street
New York, NY 10013
TEL: 212.530.9300 FAX: 212.269.5894

Retail Interior Design & Planning
Elkus-Manfredi
300 A Street
Boston, MA 02210
TEL: 617.426.1300

No.	Description	Date
1	D.O.B. AMENDMENT #2	10/15/2016

Key Plan

Issue Date: 10/15/2016
Project No. N11328.00
Drawn By: Author
Sheet Number

Damian Titus
Buildings
APPROVED
Under Directive 2 of 1975
AMENDED APPLICATION
Date: 05/03/2017
NYC Development Hub

Drawing Title
TOWER A ELEVATOR INTERMEDIATE SUPPORT PART PLANS V

Drawing Number
S3-6105
B-Scan Drawing Number
S-486.00

SHEET 282 OF 443

© 2015 KOHN PEDERSEN FOX ASSOCIATES PC. All rights reserved.

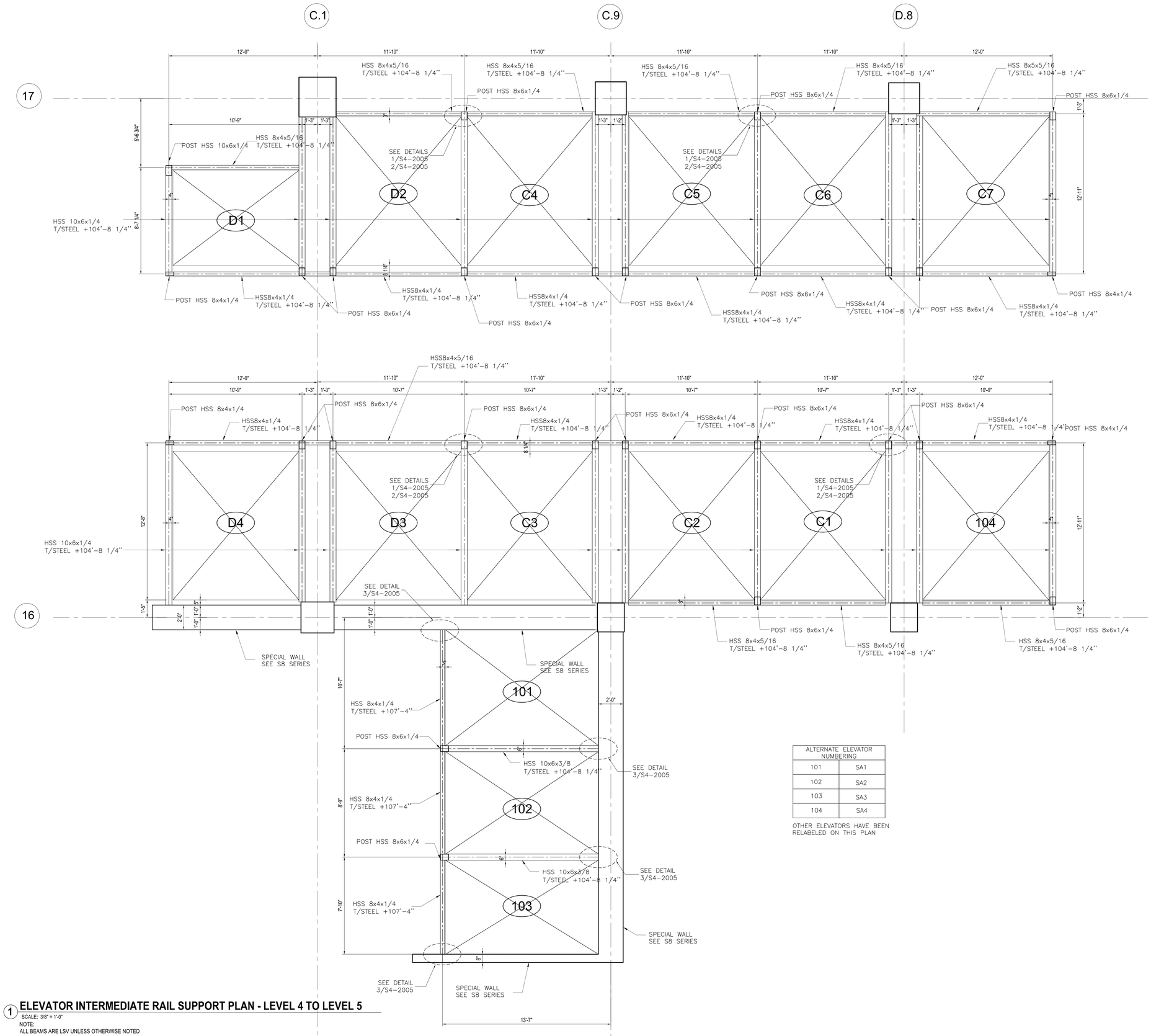

ALTERNATE ELEVATOR NUMBERING	
101	SA1
102	SA2
103	SA3
104	SA4

OTHER ELEVATORS HAVE BEEN RELABELED ON THIS PLAN

1 ELEVATOR INTERMEDIATE RAIL SUPPORT PLAN - LEVEL 4 TO LEVEL 5

SCALE: 3/8" = 1'-0"

NOTE:
ALL BEAMS ARE LSV UNLESS OTHERWISE NOTED

Damian Titus
Buildings
APPROVED
Under Directive 2 of 1975
AMENDED APPLICATION
Date: 05/03/2017
NYC Development Hub

HUDSON YARDS - RETAIL PODIUM AND TOWER A

500 WEST 33RD STREET
New York, NY

Client
Related Companies
60 Columbus Circle
New York, NY 10023
TEL: 212.801.1000 FAX: 212.801.1048

Oxford Properties Group
320 Park Avenue, 17th Floor
New York, NY 10022
TEL: 212.986.7514 FAX: 212.986.7510

Architect
Kohn Pedersen Fox Associates
11 West 42nd Street
New York, New York 10036
TEL: 212.977.6500 FAX: 212.956.2526

Structural Engineer
Thornton Tomasetti, Inc.
51 Madison Avenue
New York, New York 10010
TEL: 917.661.7800 FAX: 718.661.7801

Mechanical, Electrical, Plumbing, Fire Protection
Jaros Baum & Bolles Consulting Engineers
80 Pine Street
New York, NY 10013
TEL: 212.530.9300 FAX: 212.269.5894

Retail Interior Design & Planning
Elkus-Manfredi
300 A Street
Boston, MA 02210
TEL: 617.426.1300

No.	Description	Date
1	D.O.B. AMENDMENT #2	10/15/2016

Key Plan

Issue Date: 10/15/2016
Project No. N11328.00
Drawn By: Author
Sheet Number

Drawing Title
TOWER A ELEVATOR INTERMEDIATE SUPPORT PART PLANS VI

Drawing Number
S3-6106
B-Scan Drawing Number
S-487.00

© 2016 Elkus Manfredi Architects, Inc. Copyright Reserved

DEPT OF BLDGS 421195255 Job Number
E500043149I Scan Code

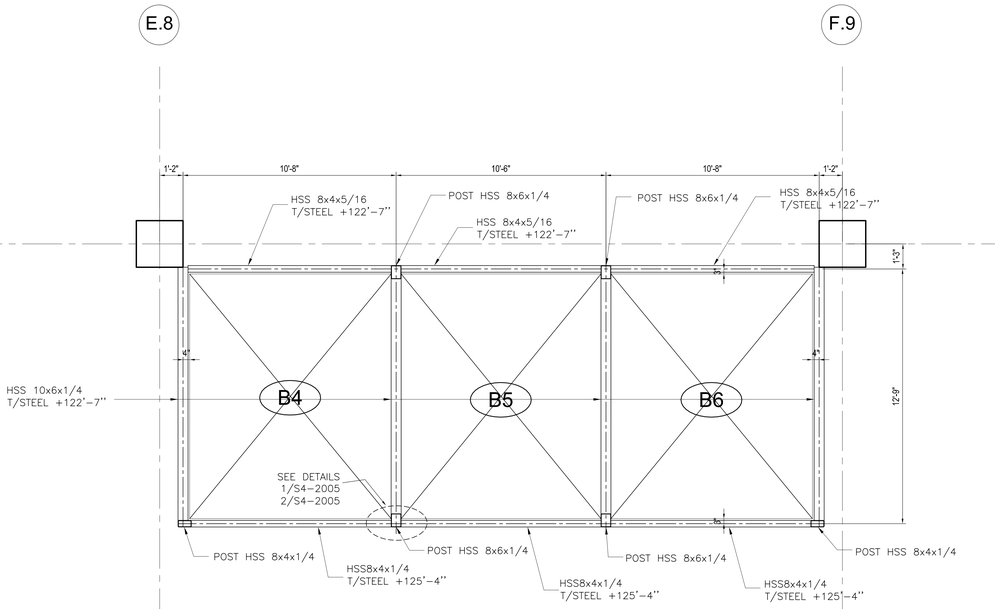

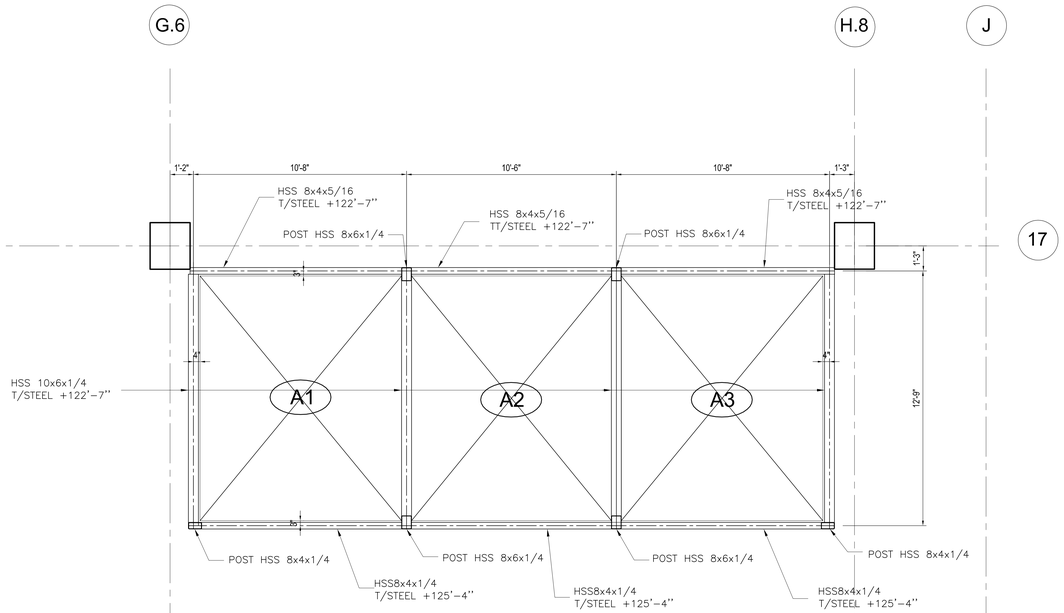

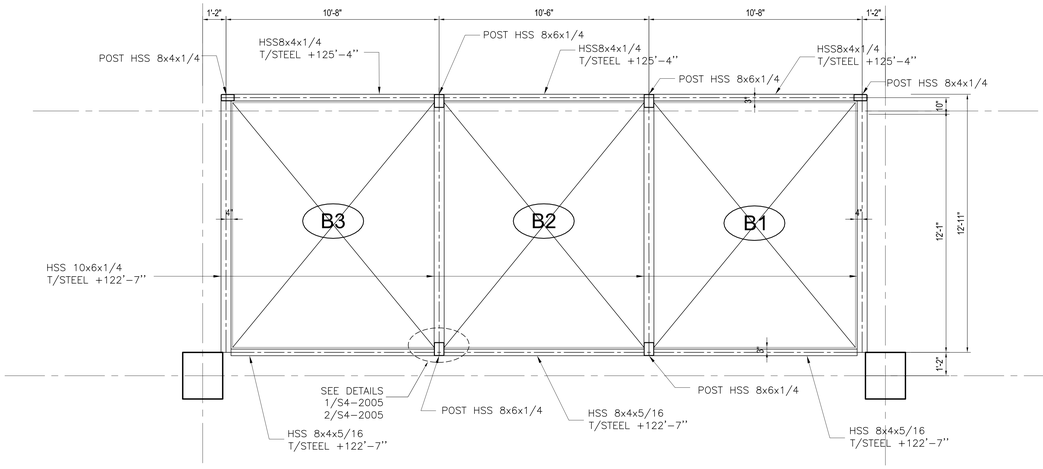

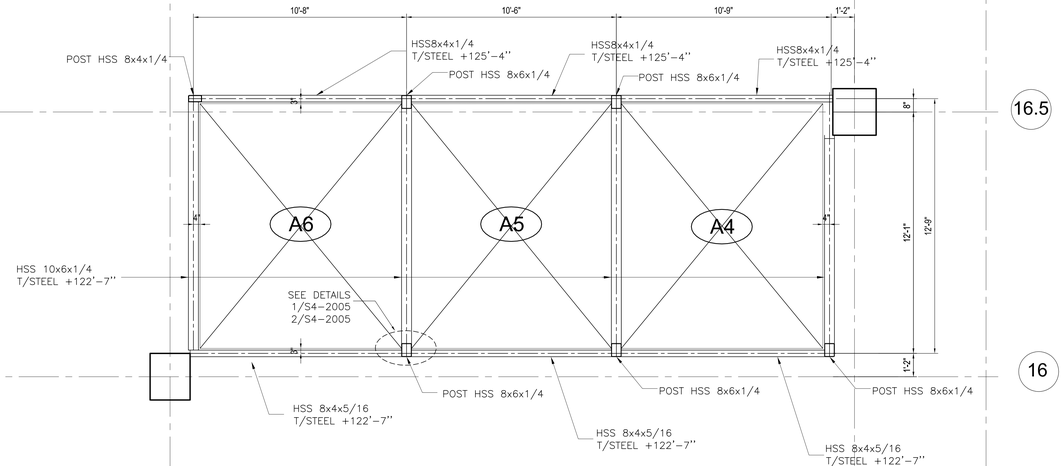

1 ELEVATOR INTERMEDIATE RAIL SUPPORT PLAN - LEVEL 5 TO LEVEL 6

SCALE: 3/8" = 1'-0"

NOTE:
ALL BEAMS ARE LSV UNLESS OTHERWISE NOTED

HUDSON YARDS - RETAIL PODIUM AND TOWER A

500 WEST 33RD STREET
New York, NY

Client
Related Companies
60 Columbus Circle
New York, NY 10023
TEL: 212.801.1000 FAX: 212.801.1048

Oxford Properties Group
320 Park Avenue, 17th Floor
New York, NY 10022
TEL: 212.986.7514 FAX: 212.986.7510

Architect
Kohn Pedersen Fox Associates
11 West 42nd Street
New York, New York 10036
TEL: 212.977.6500 FAX: 212.956.2526

Structural Engineer
Thornton Tomasetti, Inc.
51 Madison Avenue
New York, New York 10010
TEL: 917.661.7800 FAX: 718.661.7801

Mechanical, Electrical, Plumbing, Fire Protection
Jaros Baum & Bolles Consulting Engineers
80 Pine Street
New York, NY 10013
TEL: 212.530.9300 FAX: 212.269.5894

Retail Interior Design & Planning
Elkus-Manfredi
300 A Street
Boston, MA 02210
TEL: 617.426.1300

No.	Description	Date
1	D.O.B. AMENDMENT #2	10/15/2016

Key Plan

Issue Date: 10/15/2016
Project No. N11328.00
Drawn By Author
Sheet Number

Damian Titus
APPROVED
Under Directive 2 of 1975
AMENDED APPLICATION
Date: 05/03/2017
NYC Development Hub

TOWER A ELEVATOR INTERMEDIATE SUPPORT PART PLANS VII

Drawing Number
S3-6107
Revision Drawing Number
S-488.00

© 2013 KOHN PEDERSEN FOX ASSOCIATES PC. All rights reserved.

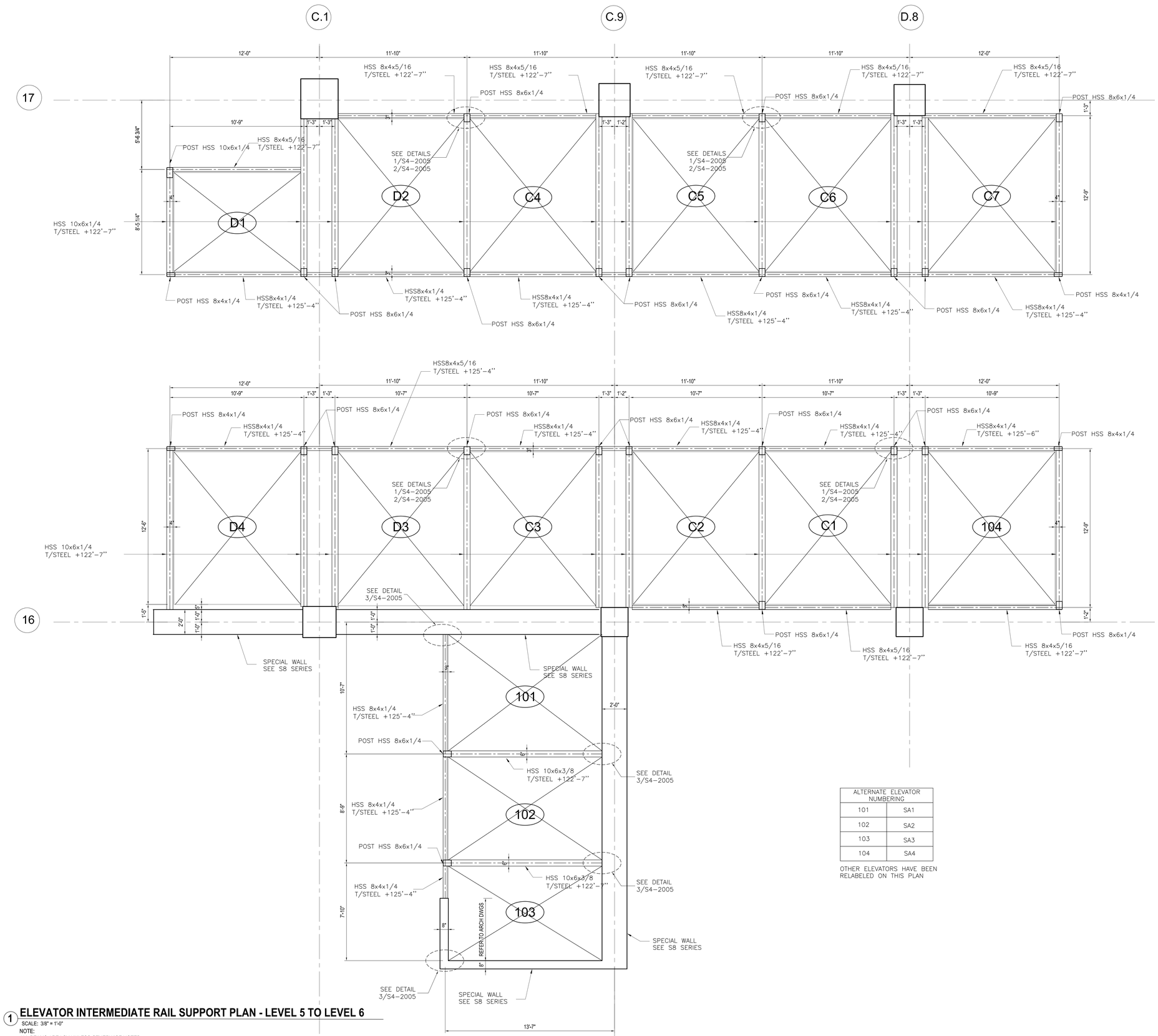

ALTERNATE ELEVATOR NUMBERING	
101	SA1
102	SA2
103	SA3
104	SA4

OTHER ELEVATORS HAVE BEEN RELABELED ON THIS PLAN

1 ELEVATOR INTERMEDIATE RAIL SUPPORT PLAN - LEVEL 5 TO LEVEL 6

SCALE: 3/8" = 1'-0"

NOTE:
ALL BEAMS ARE LSV UNLESS OTHERWISE NOTED

HUDSON YARDS - RETAIL PODIUM AND TOWER A

500 WEST 33RD STREET
New York, NY

Client
Related Companies
60 Columbus Circle
New York, NY 10023
TEL: 212.801.1000 FAX: 212.801.1048

Oxford Properties Group
320 Park Avenue, 17th Floor
New York, NY 10022
TEL: 212.986.7514 FAX: 212.986.7510

Architect
Kohn Pedersen Fox Associates
11 West 42nd Street
New York, New York 10036
TEL: 212.977.6500 FAX: 212.956.2526

Structural Engineer
Thornton Tomasetti, Inc.
51 Madison Avenue
New York, New York 10010
TEL: 917.661.7800 FAX: 718.661.7801

Mechanical, Electrical, Plumbing, Fire Protection
Jaros Baum & Bolles Consulting Engineers
80 Pine Street
New York, NY 10013
TEL: 212.530.9300 FAX: 212.269.5894

Retail Interior Design & Planning
Elkus-Manfredi
300 A Street
Boston, MA 02210
TEL: 617.426.1300

No.	Description	Date
1	D.O.B. AMENDMENT #2	10/15/2016

Key Plan

Issue Date: 10/15/2016
Project No. N11328.00
Drawn By Author
Sheet Number

Damian Titus
Buildings
APPROVED
Under Directive 2 of 1975
AMENDED APPLICATION
Date: 05/03/2017
NYC Development Hub

Drawing Title
TOWER A ELEVATOR INTERMEDIATE SUPPORT PART PLANS VIII

Drawing Number
S3-6108
B-Scan Drawing Number
S-489.00

© 2013 KOHN PEDERSEN FOX ASSOCIATES PC. All rights reserved.

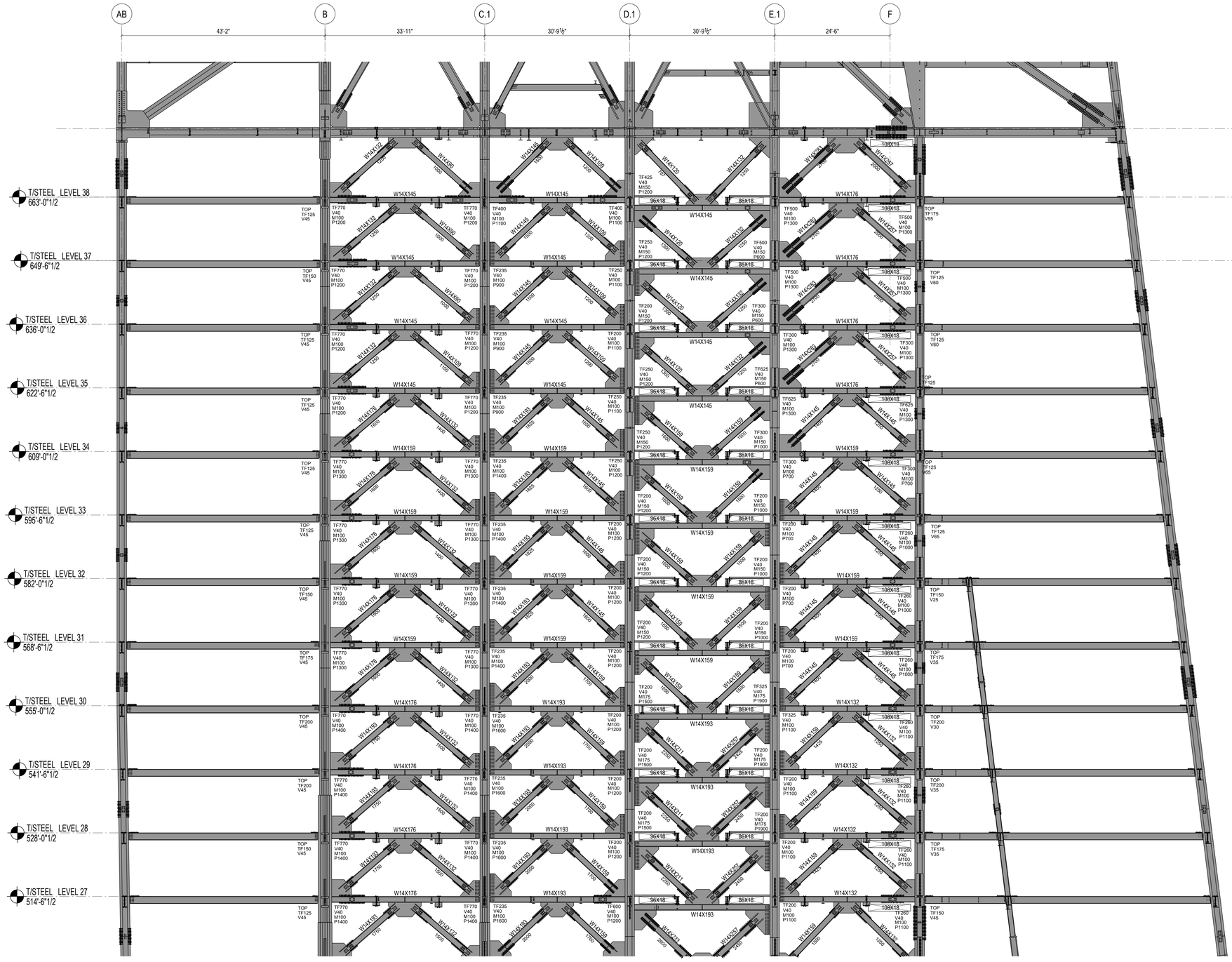

1 ELEVATION AT GRID LINE 16
1/8" = 1'-0"

SHEET NOTES :

1. UNO, AT BRACED FRAME BEAMS INDICATED ON THIS ELEVATION. PROVIDE 2 STUDS/FT. FOR ALL REGIONS WHERE SLAB IS PRESENT ALONG THE BEAM LENGTH.

Damian Titus
Buildings
APPROVED
Under Directive 2 of 1975
AMENDED APPLICATION
Date: 05/03/2017
NYC Development Hub

HUDSON YARDS - RETAIL PODIUM AND TOWER A

500 WEST 33RD STREET
New York, NY

Client
Related Companies
60 Columbus Circle
New York, NY 10023
TEL: 212.801.1000 FAX: 212.801.1048

Oxford Properties Group
320 Park Avenue, 17th Floor
New York, NY 10022
TEL: 212.986.7514 FAX: 212.986.7510

Architect
Kohn Pedersen Fox Associates
11 West 42nd Street
New York, New York 10036
TEL: 212.977.6500 FAX: 212.956.2526

Structural Engineer
Thornton Tomasetti, Inc.
51 Madison Avenue
New York, New York 10010
TEL: 917.661.7800 FAX: 718.661.7801

Mechanical, Electrical, Plumbing, Fire Protection
Jaros Baum & Bolles Consulting Engineers
80 Pine Street
New York, NY 10013
TEL: 212.530.9300 FAX: 212.269.5894

Retail Interior Design & Planning
Elkus-Manfredi
300 A Street
Boston, MA 02210
TEL: 617.426.1300

No.	Description	Date
2	D.O.B AMENDMENT #2	10/15/2016
1	D.O.B BUILDING PERMIT FILING	12/10/2014

Key Plan

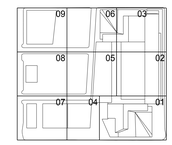

Issue Date 12/10/2014
Project No. N11328.00
Drawn By:
Sheet Number

STATE OF NEW YORK — DAMIAN J. TITUS — 035911 — LICENSED PROFESSIONAL ENGINEER

HYE-TA-S2-5060
Drawing Title

LEVELS 26-39 - EAST-WEST BRACING SECTION

Drawing Number
S2-5060
Key Sheet Drawing Number
S-490.01

© 2013 KOHN PEDERSEN FOX ASSOCIATES PC. All rights reserved.

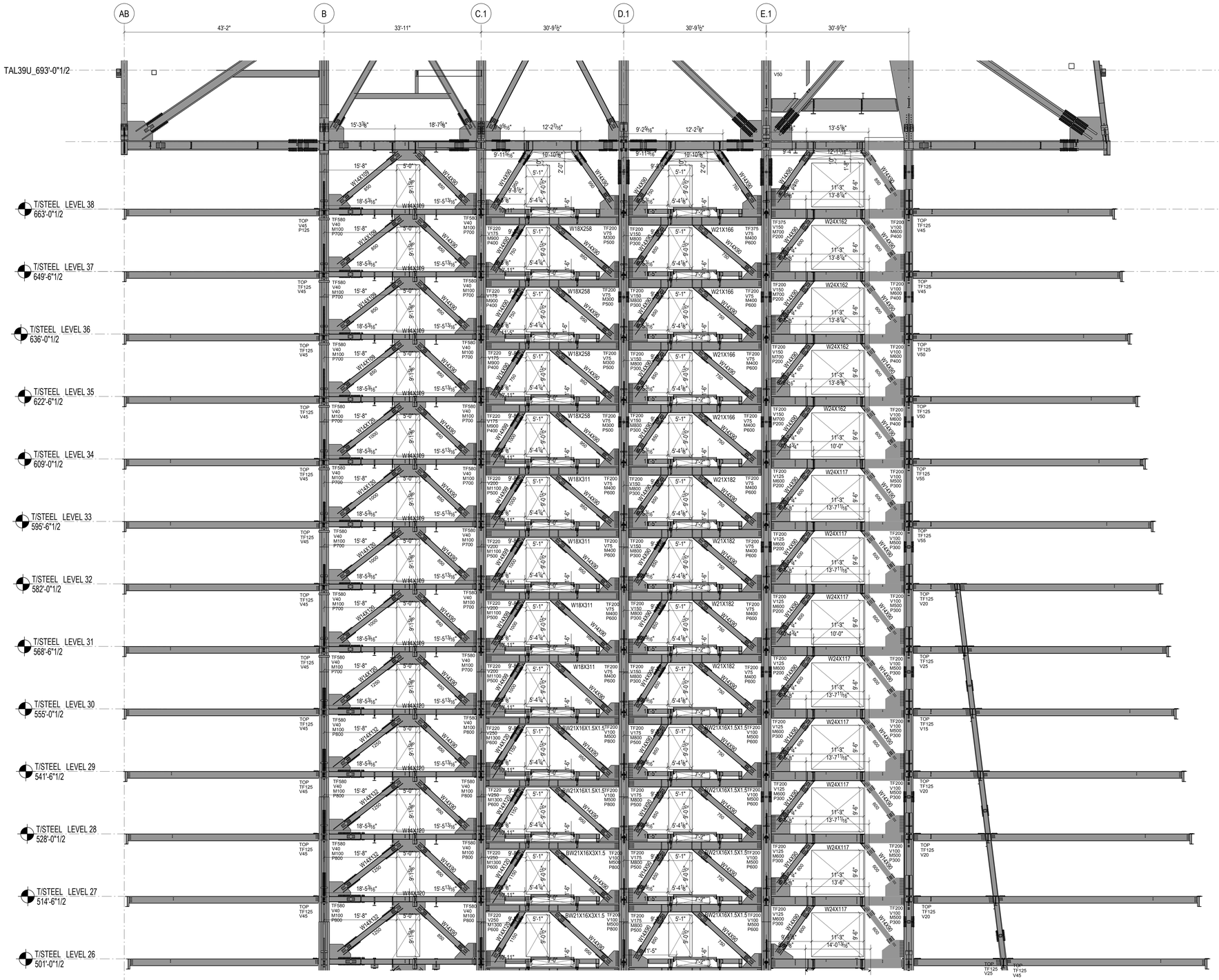

1 ELEVATION AT GRID LINE 15
1/8" = 1'-0"

SHEET NOTES :

1. UNO, AT BRACED FRAME BEAMS INDICATED ON THIS ELEVATION, PROVIDE 2 STUDS/FT. FOR ALL REGIONS WHERE SLAB IS PRESENT ALONG THE BEAM LENGTH.

Damian Titus
Buildings
APPROVED
Under Directive 2 of 1975
AMENDED APPLICATION
Date: 05/03/2017
NYC Development Hub

HUDSON YARDS - RETAIL PODIUM AND TOWER A

500 WEST 33RD STREET
New York, NY

Client
Related Companies
60 Columbus Circle
New York, NY 10023
TEL: 212.801.1000 FAX: 212.801.1048

Oxford Properties Group
320 Park Avenue, 17th Floor
New York, NY 10022
TEL: 212.986.7514 FAX: 212.986.7510

Architect
Kohn Pedersen Fox Associates
11 West 42nd Street
New York, New York 10036
TEL: 212.977.6500 FAX: 212.956.2526

Structural Engineer
Thornton Tomasetti, Inc.
51 Madison Avenue
New York, New York 10010
TEL: 917.661.7800 FAX: 718.661.7801

Mechanical, Electrical, Plumbing, Fire Protection
Jaros Baum & Bolles Consulting Engineers
80 Pine Street
New York, NY 10013
TEL: 212.530.9300 FAX: 212.269.5894

Retail Interior Design & Planning
Elkus-Manfredi
300 A Street
Boston, MA 02210
TEL: 617.426.1300

No.	Description	Date
2	D.O.B AMENDMENT #2	10/15/2016
1	D.O.B BUILDING PERMIT FILING	12/10/2014

Key Plan

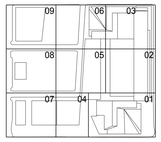

Issue Date 12/10/2014
Project No. N11328.00
Drawn By
Sheet Number

HYE-TA-S2-5061
Drawing Title

LEVELS 26-39 - EAST-WEST BRACING SECTION

Drawing Number
S2-5061
B-Scan Drawing Number
S-491.01

© 2013 KOHN PEDERSEN FOX ASSOCIATES PC. All rights reserved.

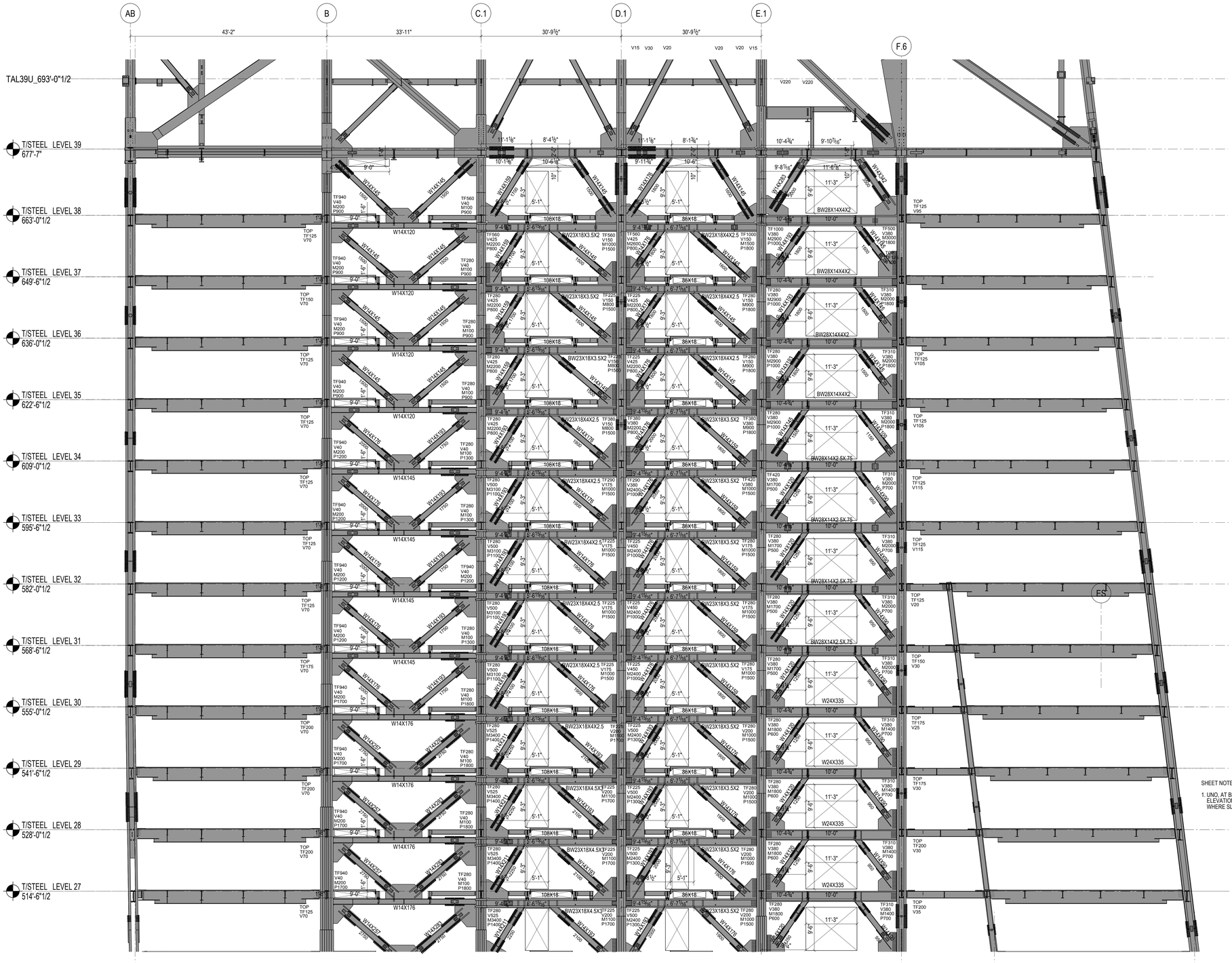

1 ELEVATION AT GRID LINE 14
⅛" = 1'-0"

SHEET NOTES :

1. UNO, AT BRACED FRAME BEAMS INDICATED ON THIS ELEVATION, PROVIDE 2 STUDS/FT. FOR ALL REGIONS WHERE SLAB IS PRESENT ALONG THE BEAM LENGTH.

Damian Titus
Buildings
APPROVED
Under Directive 2 of 1975
AMENDED APPLICATION
Date: 05/03/2017
NYC Development Hub

HUDSON YARDS - RETAIL PODIUM AND TOWER A

500 WEST 33RD STREET
New York, NY

Client
Related Companies
60 Columbus Circle
New York, NY 10023
TEL: 212.801.1000 FAX: 212.801.1048

Oxford Properties Group
320 Park Avenue, 17th Floor
New York, NY 10022
TEL: 212.986.7514 FAX: 212.986.7510

Architect
Kohn Pedersen Fox Associates
11 West 42nd Street
New York, New York 10036
TEL: 212.977.6500 FAX: 212.956.2526

Structural Engineer
Thornton Tomasetti, Inc.
51 Madison Avenue
New York, New York 10010
TEL: 917.661.7800 FAX: 718.661.7801

Mechanical, Electrical, Plumbing, Fire Protection
Jaros Baum & Bolles Consulting Engineers
80 Pine Street
New York, NY 10013
TEL: 212.530.9300 FAX: 212.269.5894

Retail Interior Design & Planning
Elkus-Manfredi
300 A Street
Boston, MA 02210
TEL: 617.426.1300

No.	Description	Date
2	D.O.B AMENDMENT #2	10/15/2016
1	D.O.B BUILDING PERMIT FILING	12/10/2014

Key Plan

Issue Date 12/10/2014
Project No. N11328.00
Drawn By:
Sheet Number

HYE-TA-S2-5062
Drawing Title

LEVELS 26-39 - EAST-WEST BRACING SECTION

Drawing Number
S2-5062
B-Scan Drawing Number
S-492.01

SHEET 242 OF 443

© 2013 KOHN PEDERSEN FOX ASSOCIATES PC. All rights reserved.

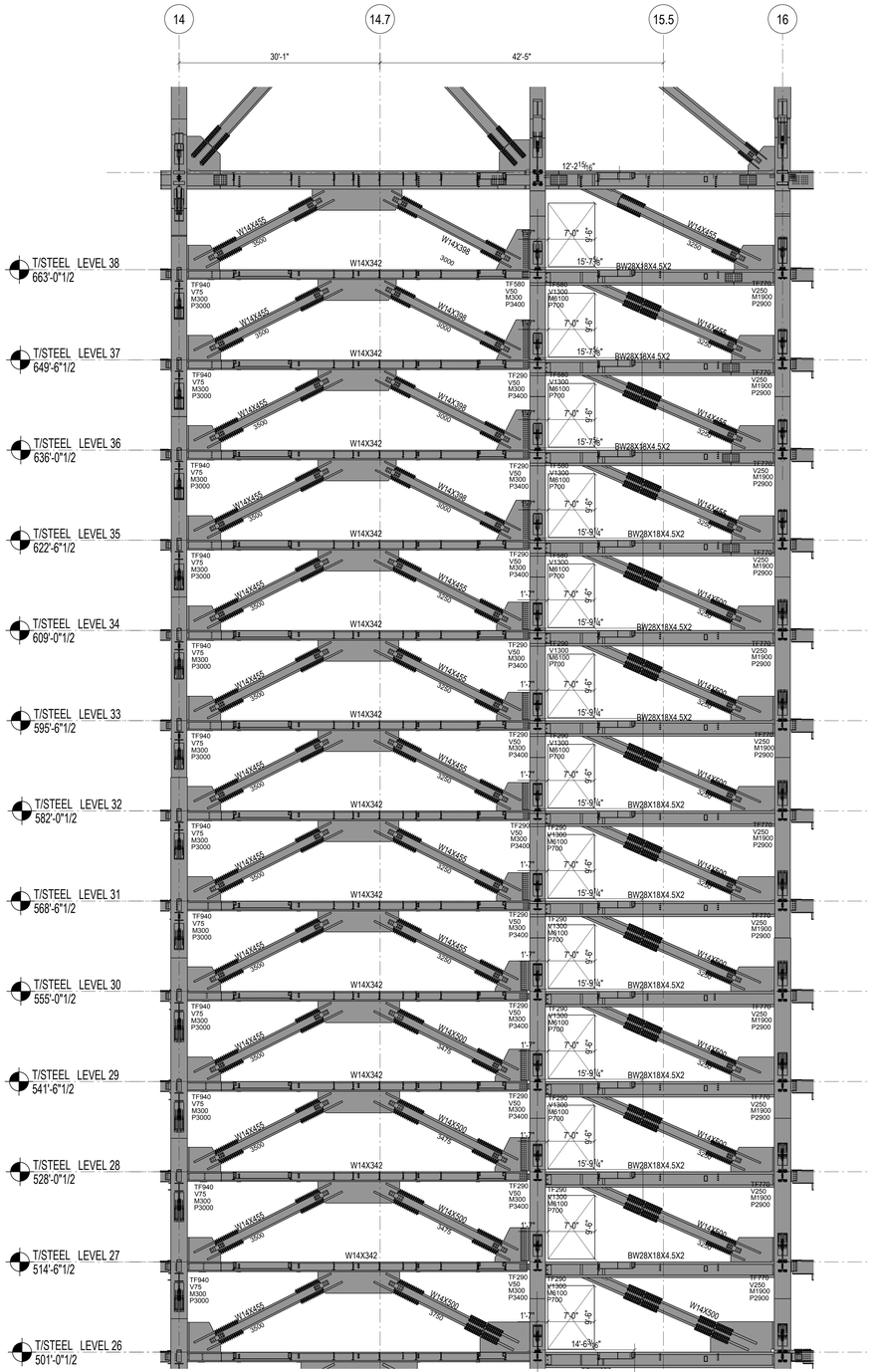

1 ELEVATION AT GRID LINE B
1/8" = 1'-0"

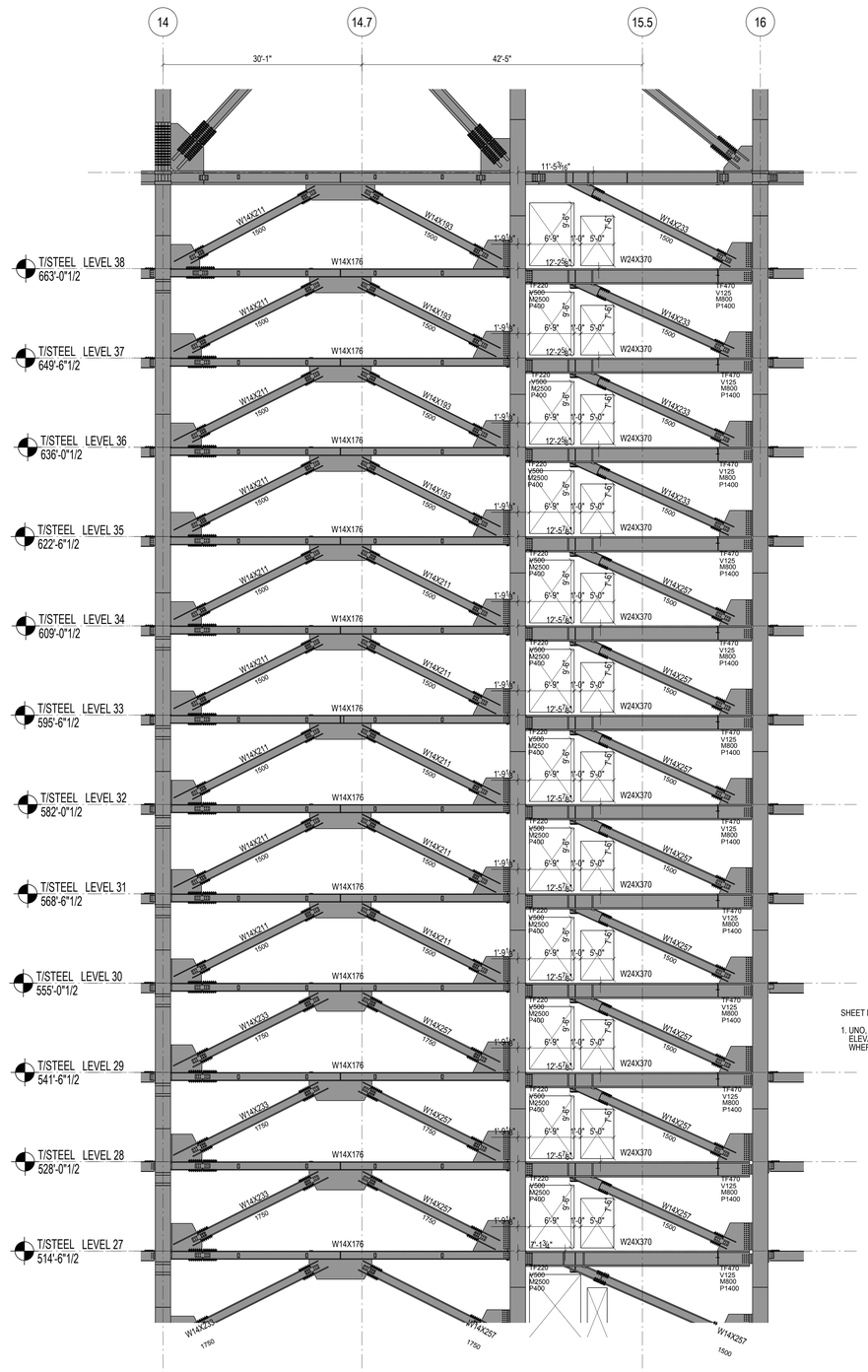

2 ELEVATION AT GRID LINE C.1
1/8" = 1'-0"

SHEET NOTES :

1. UNO, AT BRACED FRAME BEAMS INDICATED ON THIS ELEVATION, PROVIDE 2 STUDS/FT. FOR ALL REGIONS WHERE SLAB IS PRESENT ALONG THE BEAM LENGTH.

Damian Titus
Buildings
APPROVED
Under Directive 2 of 1975
MUNICIPAL REGULATIONS
Date: 05/03/2017
NYC Development Hub

HUDSON YARDS - RETAIL PODIUM AND TOWER A

500 WEST 33RD STREET
New York, NY

Client
Related Companies
60 Columbus Circle
New York, NY 10023
TEL: 212.801.1000 FAX: 212.801.1048

Oxford Properties Group
320 Park Avenue, 17th Floor
New York, NY 10022
TEL: 212.986.7514 FAX: 212.986.7510

Architect
Kohn Pedersen Fox Associates
11 West 42nd Street
New York, New York 10036
TEL: 212.977.6500 FAX: 212.956.2526

Structural Engineer
Thornton Tomasetti, Inc.
51 Madison Avenue
New York, New York 10010
TEL: 917.661.7800 FAX: 718.661.7801

Mechanical, Electrical, Plumbing, Fire Protection
Jaros Baum & Bolles Consulting Engineers
80 Pine Street
New York, NY 10013
TEL: 212.530.9300 FAX: 212.269.5894

Retail Interior Design & Planning
Elkus-Manfredi
300 A Street
Boston, MA 02210
TEL: 617.426.1300

No.	Description	Date
2	D.O.B AMENDMENT #2	10/15/2016
1	D.O.B BUILDING PERMIT FILING	12/10/2014

Key Plan

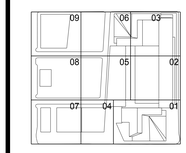

Issue Date 12/10/2014
Project No. N11328.00
Drawn By
Sheet Number

STATE OF NEW YORK
DANIEL J. SOLIN
049 [illegible]
LICENSED PROFESSIONAL ENGINEER

HYE-TA-S2-5063
Drawing Title

LEVELS 26-39 - NORTH-SOUTH BRACING SECTIONS

Drawing Number
S2-5063
X-Scan Drawing Number
S-493.01

© 2013 KOHN PEDERSEN FOX ASSOCIATES PC. All rights reserved.

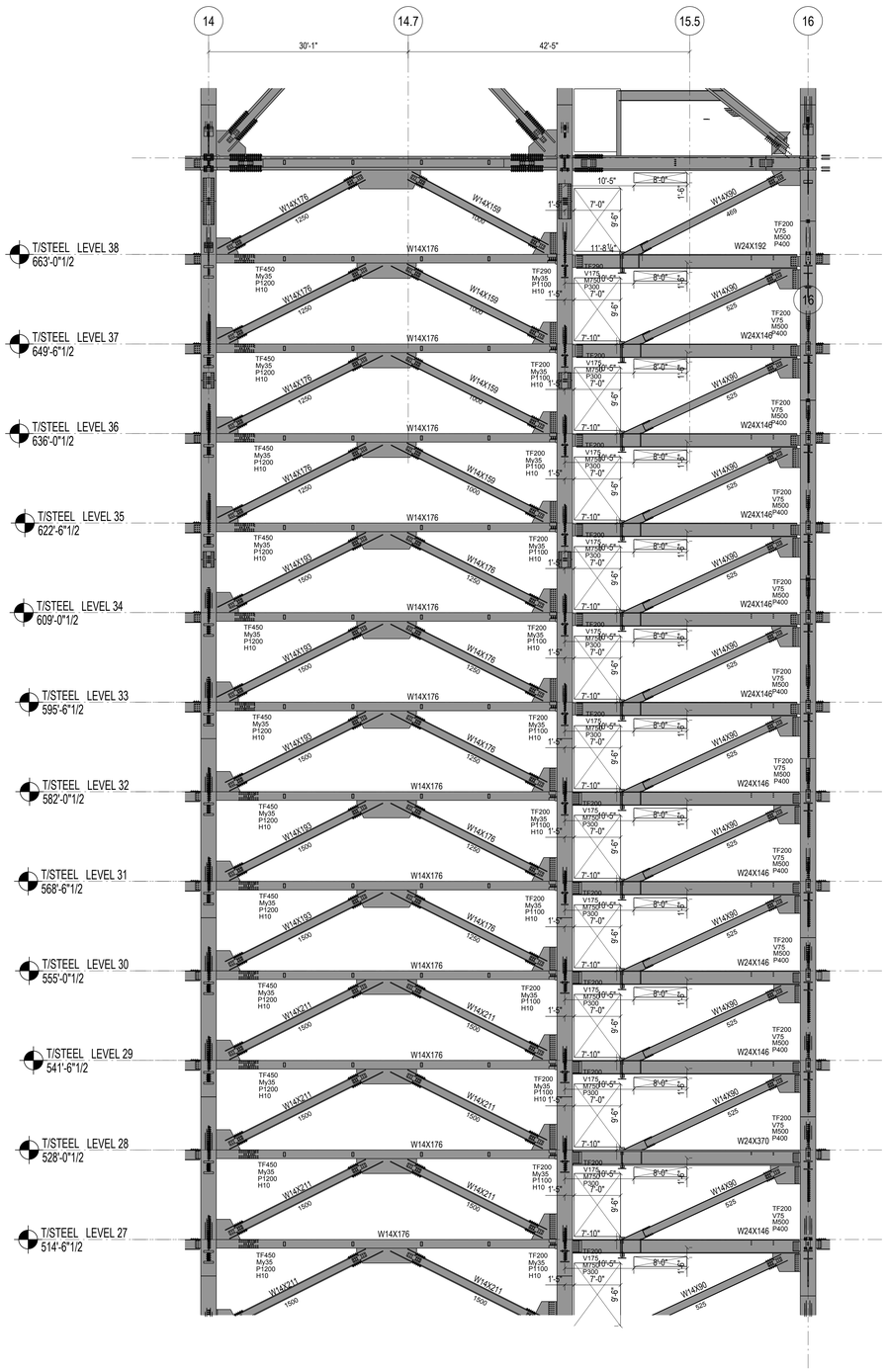

1 ELEVATION AT GRID LINE D.1
1/8" = 1'-0"

SHEET NOTES :

1. UNO, AT BRACED FRAME BEAMS INDICATED ON THIS ELEVATION, PROVIDE 2 STUDS/FT. FOR ALL REGIONS WHERE SLAB IS PRESENT ALONG THE BEAM LENGTH.

HUDSON YARDS - RETAIL PODIUM AND TOWER A

500 WEST 33RD STREET
New York, NY

Client
Related Companies
60 Columbus Circle
New York, NY 10023
TEL: 212.801.1000 FAX: 212.801.1048

Oxford Properties Group
320 Park Avenue, 17th Floor
New York, NY 10022
TEL: 212.986.7514 FAX: 212.986.7510

Architect
Kohn Pedersen Fox Associates
11 West 42nd Street
New York, New York 10036
TEL: 212.977.6500 FAX: 212.956.2526

Structural Engineer
Thornton Tomasetti, Inc.
51 Madison Avenue
New York, New York 10010
TEL: 917.661.7800 FAX: 718.661.7801

Mechanical, Electrical, Plumbing, Fire Protection
Jaros Baum & Bolles Consulting Engineers
80 Pine Street
New York, NY 10013
TEL: 212.530.9300 FAX: 212.269.5894

Retail Interior Design & Planning
Elkus-Manfredi
300 A Street
Boston, MA 02210
TEL: 617.426.1300

No.	Description	Date
2	D.O.B AMENDMENT #2	10/15/2016
1	D.O.B BUILDING PERMIT FILING	12/10/2014

Key Plan

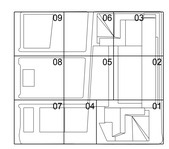

Issue Date 12/10/2014
Project No. N11328.00
Drawn By
Sheet Number

Damian Titus
Buildings
APPROVED
Under Directive 2 of 1975
AMENDED APPLICATION
Date: 05/03/2017
NYC Development Hub

HYE-TA-S2-5064
Drawing Title

LEVELS 26-39 - NORTH-SOUTH BRACING SECTIONS

Drawing Number
S2-5064
Active Drawing Number
S-494.01

© 2013 KOHN PEDERSEN FOX ASSOCIATES PC. All rights reserved.

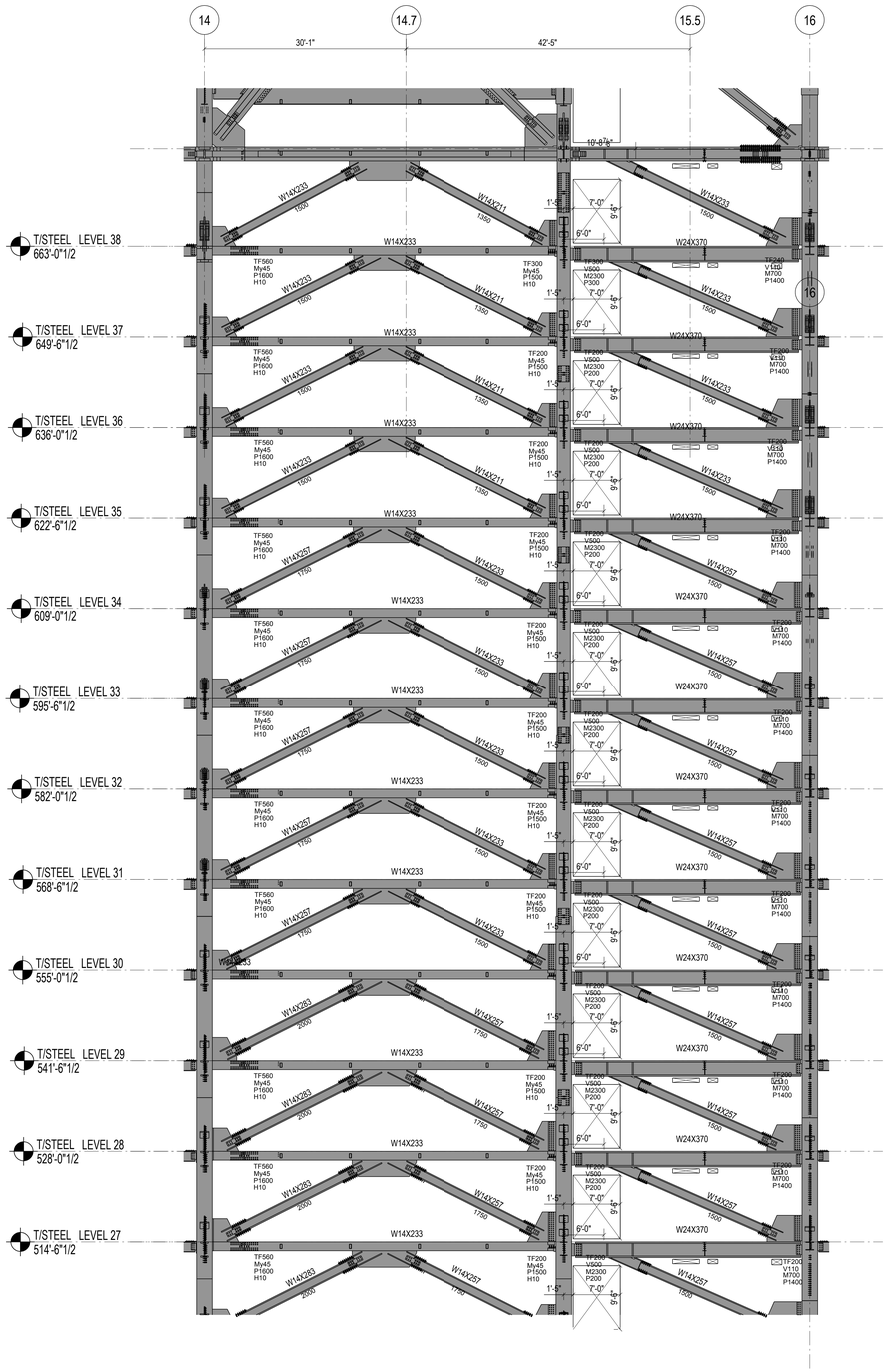

1 ELEVATION AT GRID LINE E.1
1/8" = 1'-0"

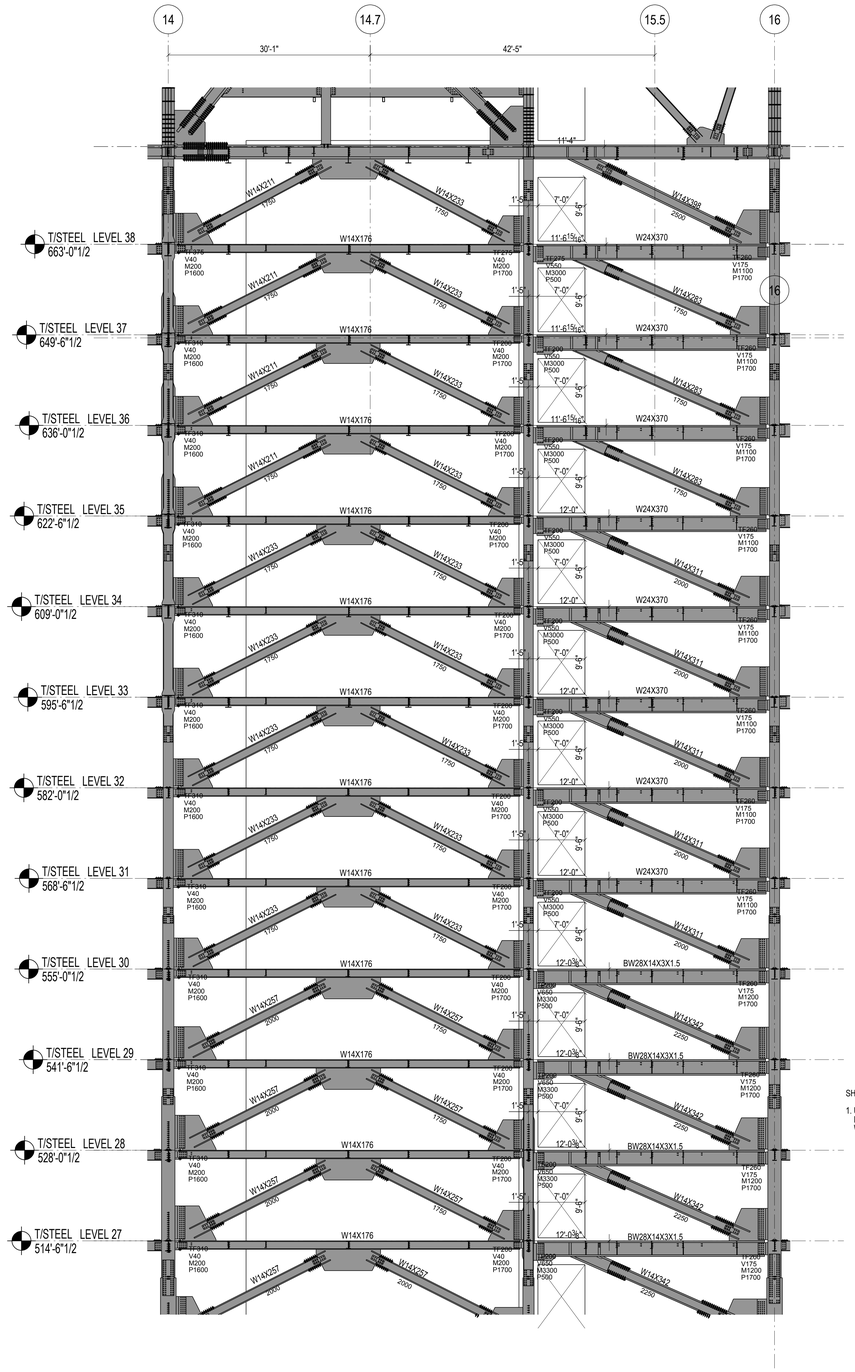

2 ELEVATION AT GRID LINE F.6
1/8" = 1'-0"

SHEET NOTES :

1. UNO, AT BRACED FRAME BEAMS INDICATED ON THIS ELEVATION, PROVIDE 2 STUDS/FT. FOR ALL REGIONS WHERE SLAB IS PRESENT ALONG THE BEAM LENGTH.

Damian Titus
Buildings
APPROVED
Under Directive 2 of 1975
EXTENSION OF OPERATION
Date: 05/03/2017
NYC Development Hub

HUDSON YARDS - RETAIL PODIUM AND TOWER A
500 WEST 33RD STREET
New York, NY

Client
Related Companies
60 Columbus Circle
New York, NY 10023
TEL: 212.801.1000 FAX: 212.801.1048

Oxford Properties Group
320 Park Avenue, 17th Floor
New York, NY 10022
TEL: 212.986.7514 FAX: 212.986.7510

Architect
Kohn Pedersen Fox Associates
11 West 42nd Street
New York, New York 10036
TEL: 212.977.6500 FAX: 212.956.2526

Structural Engineer
Thornton Tomasetti, Inc.
51 Madison Avenue
New York, New York 10010
TEL: 917.661.7800 FAX: 718.661.7801

Mechanical, Electrical, Plumbing, Fire Protection
Jaros Baum & Bolles Consulting Engineers
80 Pine Street
New York, NY 10013
TEL: 212.530.9300 FAX: 212.269.5894

Retail Interior Design & Planning
Elkus-Manfredi
300 A Street
Boston, MA 02210
TEL: 617.426.1300

No.	Description	Date
2	D.O.B AMENDMENT #2	10/15/2016
1	D.O.B BUILDING PERMIT FILING	12/10/2014

Key Plan

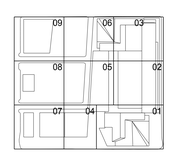

Issue Date 12/10/2014
Project No. N11328.00
Drawn By
Sheet Number

HYE-TA-S2-5065
Drawing Title

LEVELS 26-39 - NORTH-SOUTH BRACING SECTIONS

Drawing Number
S2-5065
Kohn Drawing Number
S-495.01

© 2013 KOHN PEDERSEN FOX ASSOCIATES PC. All rights reserved.

DEPT OF BLDGS 421195255 Job Number
E526549068 Scan Code

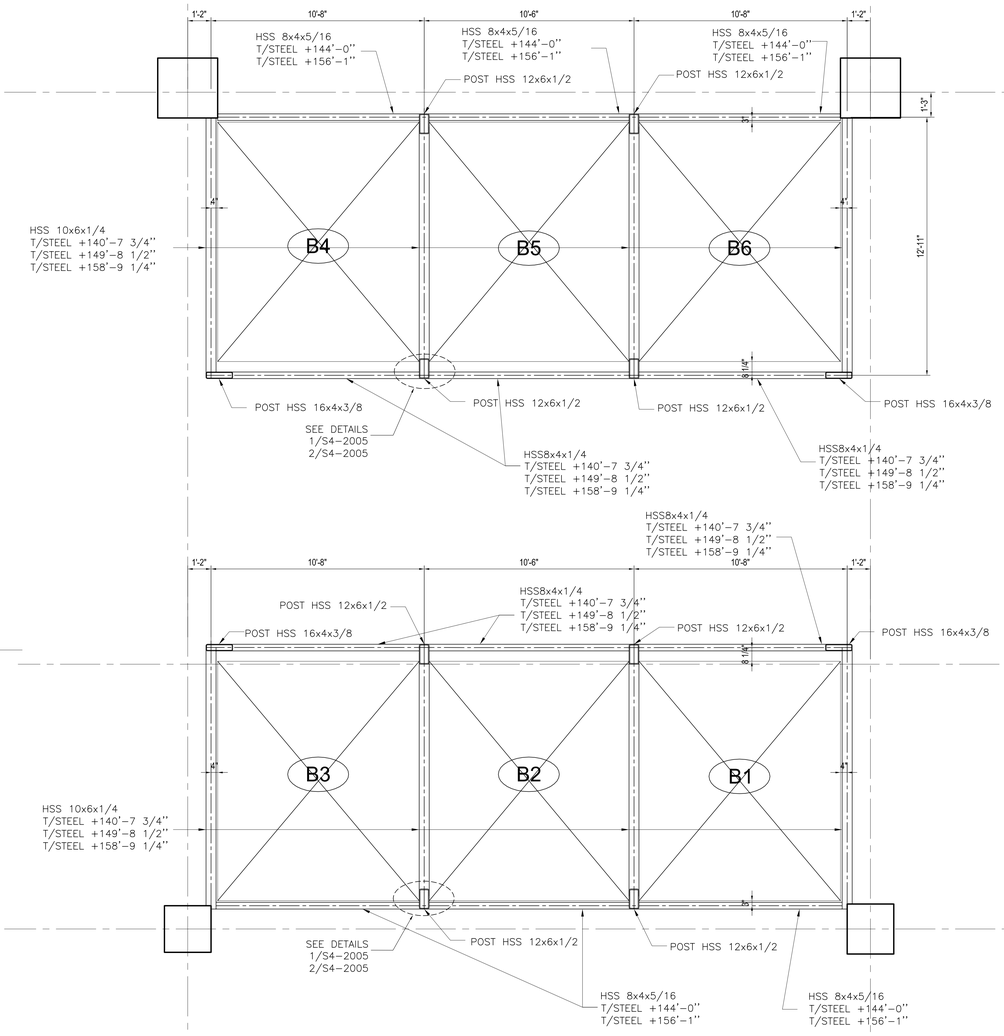

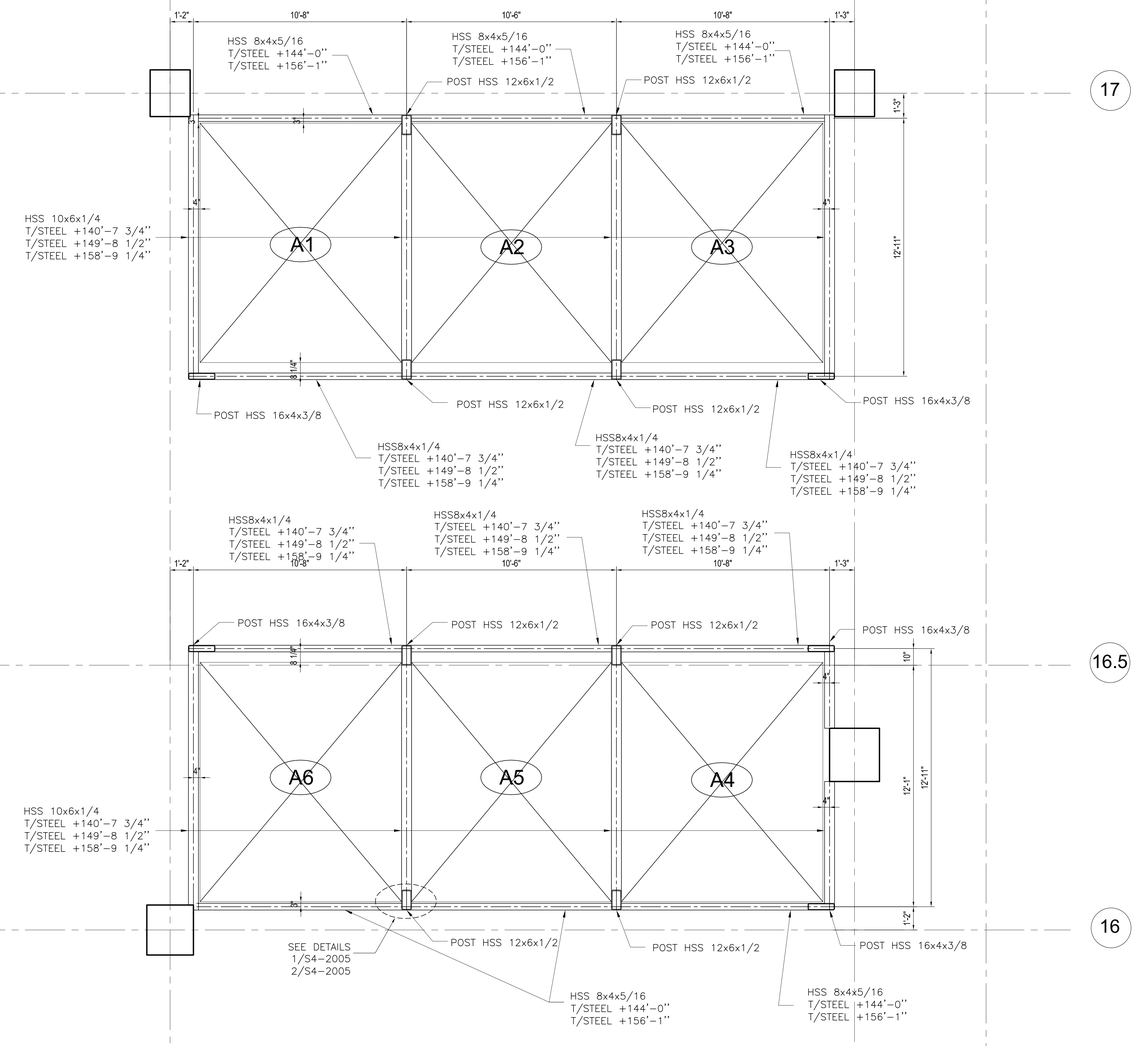

1 ELEVATOR INTERMEDIATE RAIL SUPPORT PLAN - LEVEL 6 TO LEVEL 8

SCALE: 3/8" = 1'-0"

NOTE:
ALL BEAMS ARE LSV UNLESS OTHERWISE NOTED

HUDSON YARDS - RETAIL PODIUM AND TOWER A

500 WEST 33RD STREET
New York, NY

Client
Related Companies
60 Columbus Circle
New York, NY 10023
TEL: 212.801.1000 FAX: 212.801.1048

Oxford Properties Group
320 Park Avenue, 17th Floor
New York, NY 10022
TEL: 212.986.7514 FAX: 212.986.7510

Architect
Kohn Pedersen Fox Associates
11 West 42nd Street
New York, New York 10036
TEL: 212.977.6500 FAX: 212.956.2526

Structural Engineer
Thornton Tomasetti, Inc.
51 Madison Avenue
New York, New York 10010
TEL: 917.661.7800 FAX: 718.661.7801

Mechanical, Electrical, Plumbing, Fire Protection
Jaros Baum & Bolles Consulting Engineers
80 Pine Street
New York, NY 10013
TEL: 212.530.9300 FAX: 212.269.5894

Retail Interior Design & Planning
Elkus-Manfredi
300 A Street
Boston, MA 02210
TEL: 617.426.1300

No.	Description	Date
1	D.O.B. AMENDMENT #2	10/15/2016

Key Plan

Issue Date: 10/15/2016
Project No. N11328.00
Drawn By Author
Sheet Number

Damian Titus
Buildings
APPROVED
Under Directive 2 of 1975
AMENDED APPLICATION
Date: 05/03/2017
NYC Development Hub

Drawing Title
TOWER A ELEVATOR INTERMEDIATE SUPPORT PART PLANS IX

Drawing Number
S3-6109
B-Scan Drawing Number
S-496.00 SHEET 286 OF 443

© 2015 KOHN PEDERSEN FOX ASSOCIATES PC. All rights reserved.

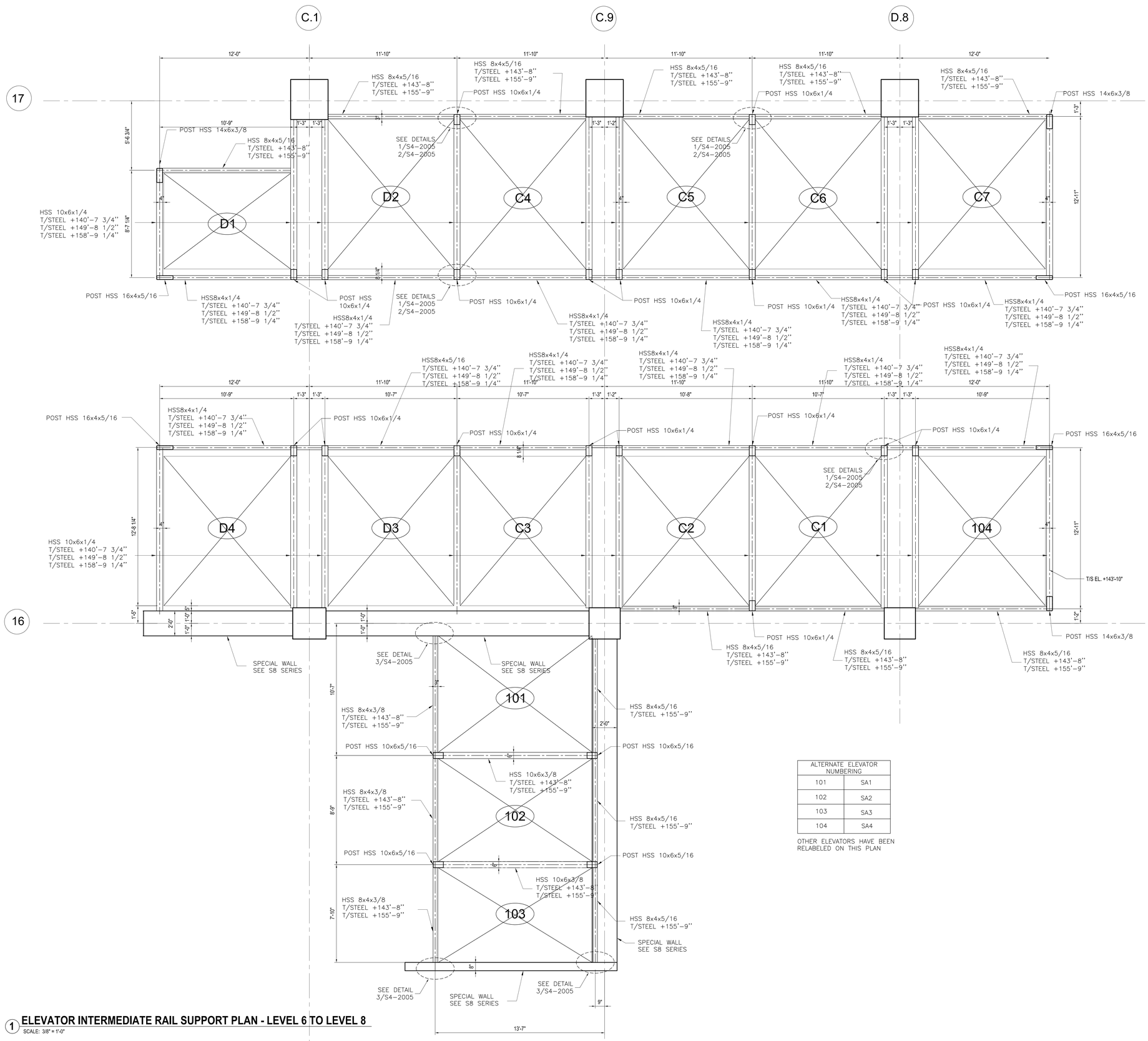

ALTERNATE ELEVATOR NUMBERING	
101	SA1
102	SA2
103	SA3
104	SA4

OTHER ELEVATORS HAVE BEEN RELABELED ON THIS PLAN

1 ELEVATOR INTERMEDIATE RAIL SUPPORT PLAN - LEVEL 6 TO LEVEL 8

SCALE: 3/8" = 1'-0"

NOTE:
ALL BEAMS ARE LSV UNLESS OTHERWISE NOTED

HUDSON YARDS - RETAIL PODIUM AND TOWER A

500 WEST 33RD STREET
New York, NY

Client
Related Companies
60 Columbus Circle
New York, NY 10023
TEL: 212.801.1000 FAX: 212.801.1048

Oxford Properties Group
320 Park Avenue, 17th Floor
New York, NY 10022
TEL: 212.986.7514 FAX: 212.986.7510

Architect
Kohn Pedersen Fox Associates
11 West 42nd Street
New York, New York 10036
TEL: 212.977.6500 FAX: 212.956.2526

Structural Engineer
Thornton Tomasetti, Inc.
51 Madison Avenue
New York, New York 10010
TEL: 917.661.7800 FAX: 718.661.7801

Mechanical, Electrical, Plumbing, Fire Protection
Jaros Baum & Bolles Consulting Engineers
80 Pine Street
New York, NY 10013
TEL: 212.530.9300 FAX: 212.269.5894

Retail Interior Design & Planning
Elkus-Manfredi
300 A Street
Boston, MA 02210
TEL: 617.426.1300

No.	Description	Date
1	D.O.B. AMENDMENT #2	10/15/2016

Key Plan

Issue Date: 10/15/2016
Project No. N11328.00
Drawn By: Author
Sheet Number

Damian Titus
Buildings
APPROVED
Under Directive 2 of 1975
AMENDED APPLICATION
Date: 05/03/2017
NYC Development Hub

Drawing Title
TOWER A ELEVATOR INTERMEDIATE SUPPORT PART PLANS X

Drawing Number
S3-6110
B-Scan Drawing Number
S-497.00

© 2013 KOHN PEDERSEN FOX ASSOCIATES PC. All rights reserved.

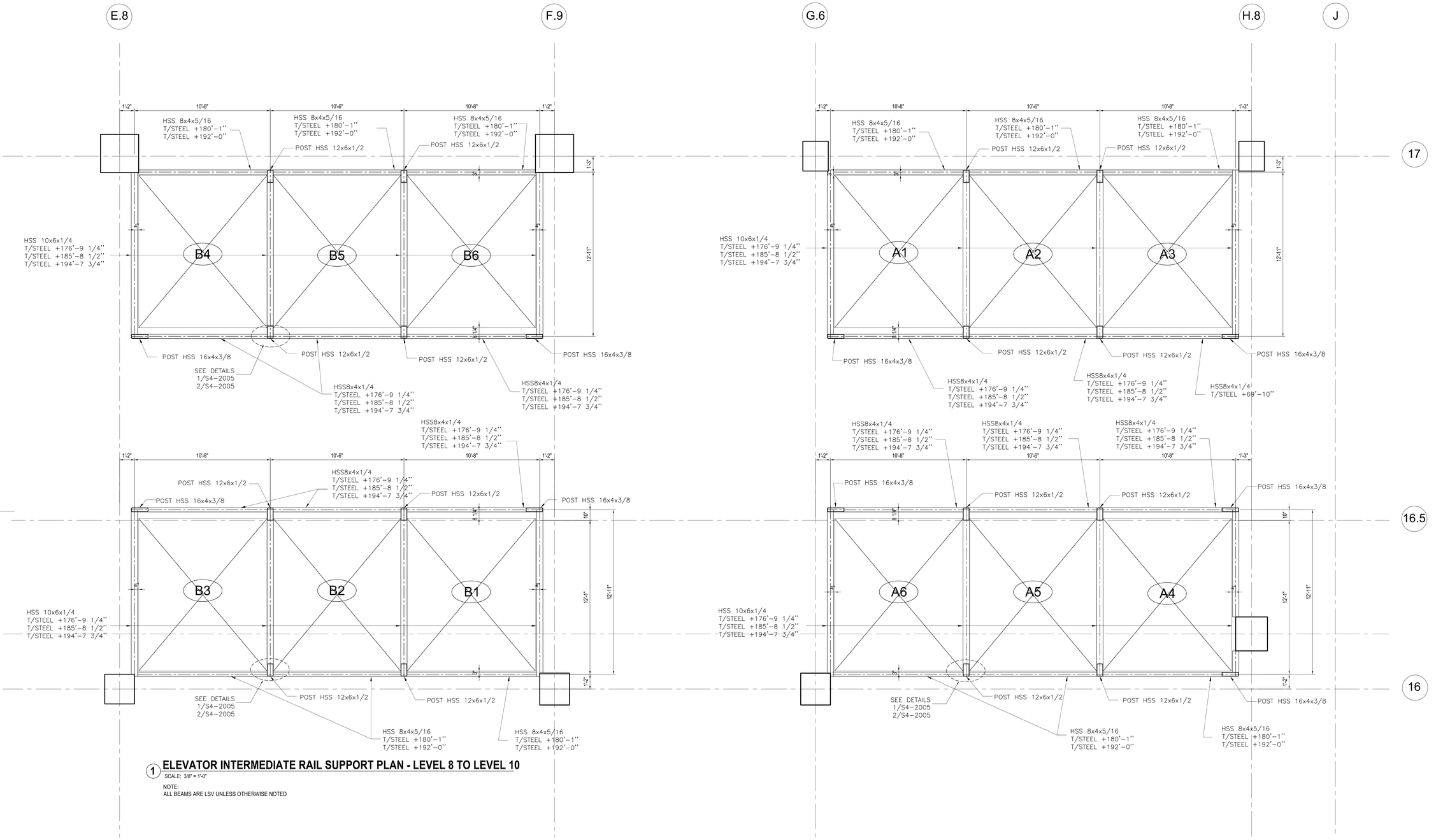

1 **ELEVATOR INTERMEDIATE RAIL SUPPORT PLAN - LEVEL 8 TO LEVEL 10**

SCALE: 3/8" = 1'-0"

NOTE:
ALL BEAMS ARE LSV UNLESS OTHERWISE NOTED

HUDSON YARDS - RETAIL PODIUM AND TOWER A

500 WEST 33RD STREET
New York, NY

Client
Related Companies
60 Columbus Circle
New York, NY 10023
TEL: 212.801.1000 FAX: 212.801.1048

Oxford Properties Group
320 Park Avenue, 17th Floor
New York, NY 10022
TEL: 212.986.7514 FAX: 212.986.7510

Architect
Kohn Pedersen Fox Associates
11 West 42nd Street
New York, New York 10036
TEL: 212.977.6500 FAX: 212.956.2526

Structural Engineer
Thornton Tomasetti, Inc.
51 Madison Avenue
New York, New York 10010
TEL: 917.661.7800 FAX: 718.661.7801

Mechanical, Electrical, Plumbing, Fire Protection
Jaros Baum & Bolles Consulting Engineers
80 Pine Street
New York, NY 10013
TEL: 212.530.9300 FAX: 212.269.5894

Retail Interior Design & Planning
Elkus-Manfredi
300 A Street
Boston, MA 02210
TEL: 617.426.1300

No.	Description	Date
1	D.O.B. AMENDMENT #2	10/15/2016

Key Plan

Issue Date: 10/15/2016
Project No. N11328.00
Drawn By Author
Sheet Number

Damian Titus
Buildings
APPROVED
Under Directive 2 of 1975
AMENDED APPLICATION
Date: 05/03/2017
NYC Development Hub

Drawing Title
TOWER A ELEVATOR INTERMEDIATE SUPPORT PART PLANS XI

Drawing Number
S3-6111
B-Scan Drawing Number
S-498.00

© 2013 KOHN PEDERSEN FOX ASSOCIATES PC. All rights reserved.

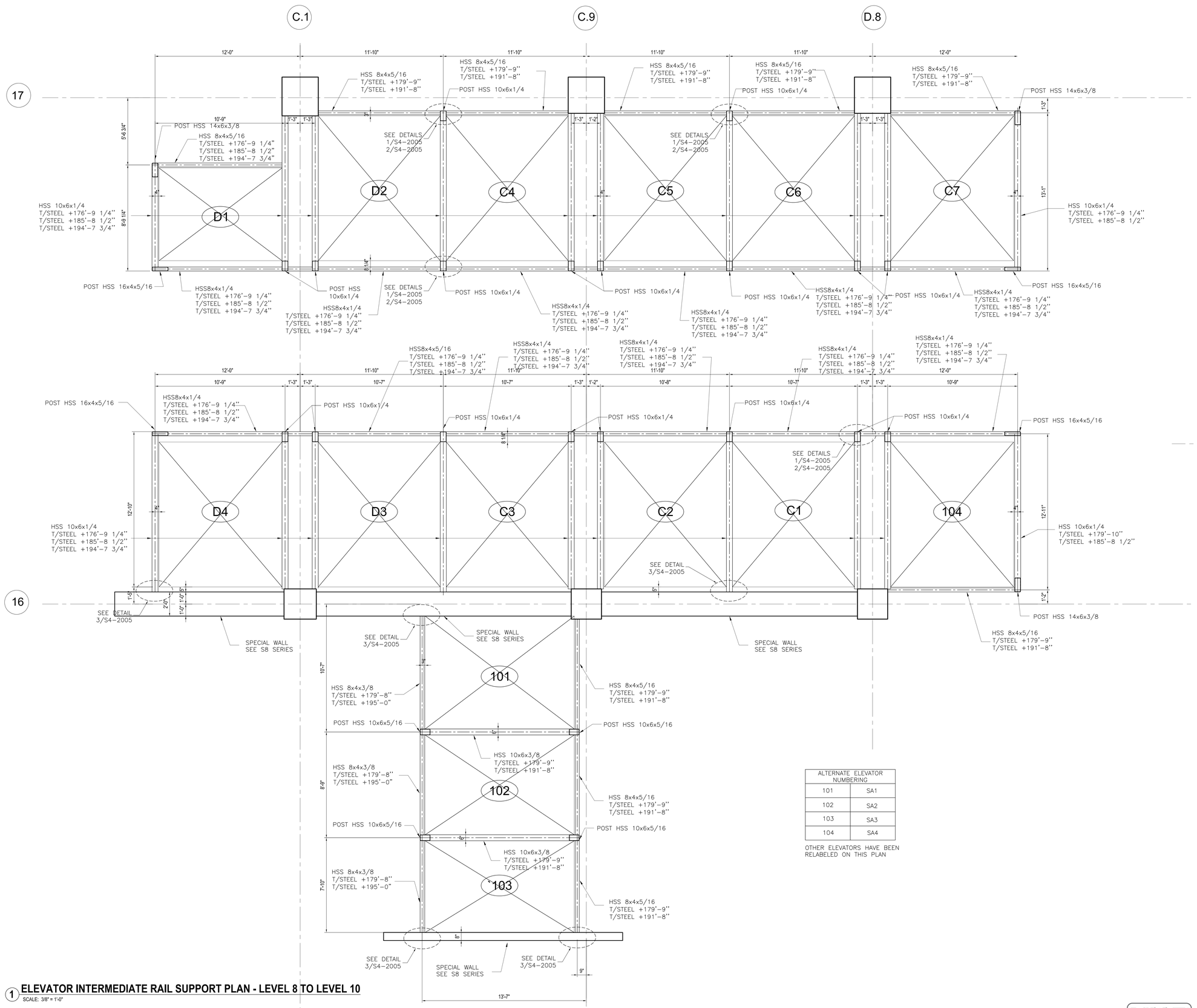

ALTERNATE ELEVATOR NUMBERING	
101	SA1
102	SA2
103	SA3
104	SA4

OTHER ELEVATORS HAVE BEEN RELABELED ON THIS PLAN

1 ELEVATOR INTERMEDIATE RAIL SUPPORT PLAN - LEVEL 8 TO LEVEL 10

SCALE: 3/8" = 1'-0"

NOTE:
ALL BEAMS ARE LSV UNLESS OTHERWISE NOTED

Damian Titus
Buildings
APPROVED
Under Directive 2 of 1975
AMENDED APPLICATION
Date: 05/03/2017
NYC Development Hub

HUDSON YARDS - RETAIL PODIUM AND TOWER A

500 WEST 33RD STREET
New York, NY

Client
Related Companies
60 Columbus Circle
New York, NY 10023
TEL: 212.801.1000 FAX: 212.801.1048

Oxford Properties Group
320 Park Avenue, 17th Floor
New York, NY 10022
TEL: 212.986.7514 FAX: 212.986.7510

Architect
Kohn Pedersen Fox Associates
11 West 42nd Street
New York, New York 10036
TEL: 212.977.6500 FAX: 212.956.2526

Structural Engineer
Thornton Tomasetti, Inc.
51 Madison Avenue
New York, New York 10010
TEL: 917.661.7800 FAX: 718.661.7801

Mechanical, Electrical, Plumbing, Fire Protection
Jaros Baum & Bolles Consulting Engineers
80 Pine Street
New York, NY 10013
TEL: 212.530.9300 FAX: 212.269.5894

Retail Interior Design & Planning
Elkus-Manfredi
300 A Street
Boston, MA 02210
TEL: 617.426.1300

No.	Description	Date
1	D.O.B. AMENDMENT #2	10/15/2016

Key Plan

Issue Date: 10/15/2016
Project No. N11328.00
Drawn By: Author
Sheet Number

Drawing Title
TOWER A ELEVATOR INTERMEDIATE SUPPORT PART PLANS XII

Drawing Number
S3-6112
B-Scan Drawing Number
S-499.00

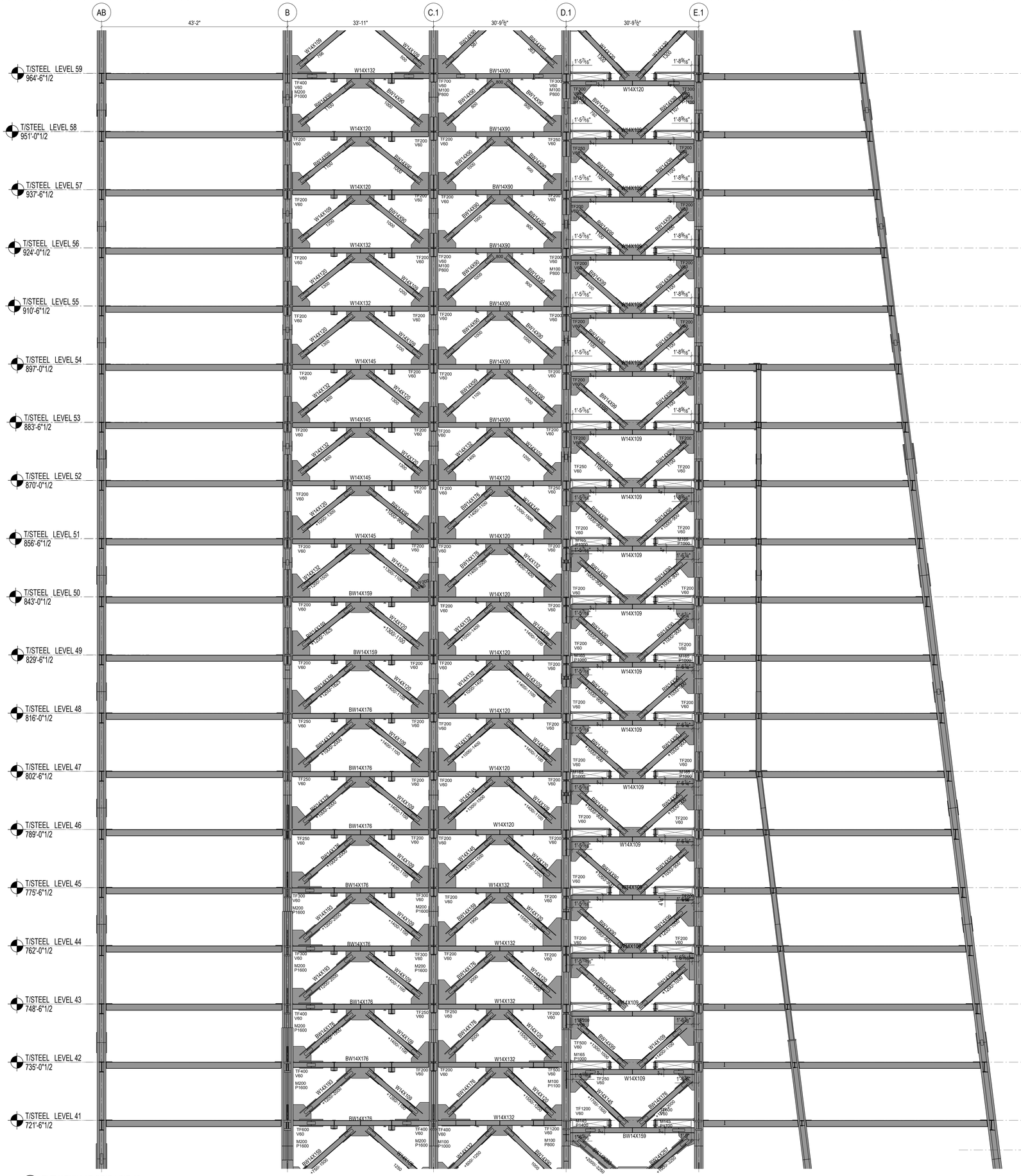

1 ELEVATION AT GRID LINE 16
1/8" = 1'-0"

SHEET NOTES :

1. UNO, AT BRACED FRAME BEAMS INDICATED ON THIS ELEVATION, PROVIDE 2 STUDS/FT. FOR ALL REGIONS WHERE SLAB IS PRESENT ALONG THE BEAM LENGTH.

Damian Titus
Buildings
APPROVED
Under Directive 2 of 1975
EXTENSION OF OPERATION
Date: 05/03/2017
NYC Development Hub

HUDSON YARDS - RETAIL PODIUM AND TOWER A

500 WEST 33RD STREET
New York, NY

Client
Related Companies
60 Columbus Circle
New York, NY 10023
TEL: 212.801.1000 FAX: 212.801.1048

Oxford Properties Group
320 Park Avenue, 17th Floor
New York, NY 10022
TEL: 212.986.7514 FAX: 212.986.7510

Architect
Kohn Pedersen Fox Associates
11 West 42nd Street
New York, New York 10036
TEL: 212.977.6500 FAX: 212.956.2526

Structural Engineer
Thornton Tomasetti, Inc.
51 Madison Avenue
New York, New York 10010
TEL: 917.661.7800 FAX: 718.661.7801

Mechanical, Electrical, Plumbing, Fire Protection
Jaros Baum & Bolles Consulting Engineers
80 Pine Street
New York, NY 10013
TEL: 212.530.9300 FAX: 212.269.5894

Retail Interior Design & Planning
Elkus-Manfredi
300 A Street
Boston, MA 02210
TEL: 617.426.1300

No.	Description	Date
2	D.O.B AMENDMENT #2	10/15/2016
1	D.O.B BUILDING PERMIT FILING	12/10/2014

Key Plan

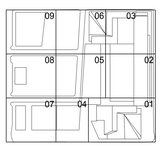

Issue Date 12/10/2014
Project No. N11328.00
Drawn By
Sheet Number

HYE-TA-S2-5070
Drawing Title

LEVELS 41-59 - EAST-WEST BRACING SECTION

Drawing Number
S2-5070
Kohn Drawing Number
S-500.01

© 2013 KOHN PEDERSEN FOX ASSOCIATES PC. All rights reserved.

A412-DE-BA-0003-231395251 Job Number
B1946251295 Sheet Count

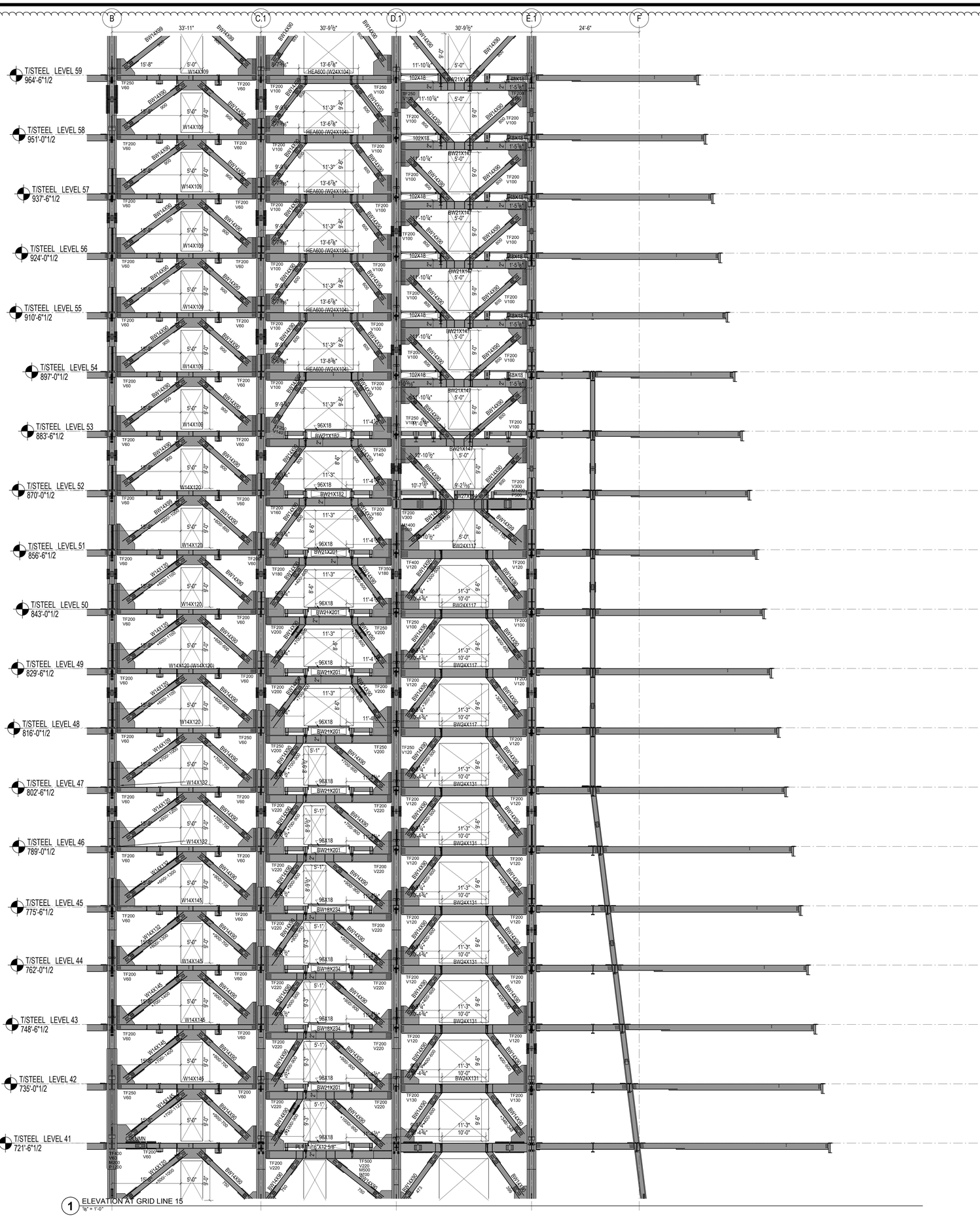

SHEET NOTES :

1. UNO, AT BRACED FRAME BEAMS INDICATED ON THIS ELEVATION, PROVIDE 2 STUDS/FT. FOR ALL REGIONS WHERE SLAB IS PRESENT ALONG THE BEAM LENGTH.

Damian Titus
Buildings
APPROVED
Under Directive 2 of 1975
EXTENSION OF OPERATION
Date: 09/03/2017
NYC Development Hub

HUDSON YARDS - RETAIL PODIUM AND TOWER A

500 WEST 33RD STREET
New York, NY

Client
Related Companies
60 Columbus Circle
New York, NY 10023
TEL: 212.801.1000 FAX: 212.801.1048

Oxford Properties Group
320 Park Avenue, 17th Floor
New York, NY 10022
TEL: 212.986.7514 FAX: 212.986.7510

Architect
Kohn Pedersen Fox Associates
11 West 42nd Street
New York, New York 10036
TEL: 212.977.6500 FAX: 212.956.2526

Structural Engineer
Thornton Tomasetti, Inc.
51 Madison Avenue
New York, New York 10010
TEL: 917.661.7800 FAX: 718.661.7801

Mechanical, Electrical, Plumbing, Fire Protection
Jaros Baum & Bolles Consulting Engineers
80 Pine Street
New York, NY 10013
TEL: 212.530.9300 FAX: 212.269.5894

Retail Interior Design & Planning
Elkus-Manfredi
300 A Street
Boston, MA 02210
TEL: 617.426.1300

No.	Description	Date
2	D.O.B AMENDMENT #2	10/15/2016
1	D.O.B BUILDING PERMIT FILING	12/10/2014

Key Plan

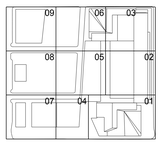

Issue Date 12/10/2014
Project No. N11328.00
Drawn By
Sheet Number

HYE-TA-S2-5071

Drawing Title

LEVELS 41-59 - EAST-WEST BRACING SECTION

Drawing Number
S2-5071
Kohn Drawing Number
S-501.01

© 2013 KOHN PEDERSEN FOX ASSOCIATES PC. All rights reserved.

A+T CAT ID: BLACK12310R0101 Job Number
E1809052010 Sheet Code

B 33'-11" C.1 30'-9½" D.1 30'-9½" E.1 24'-6" F

T/STEEL LEVEL 59 964'-6"1/2
T/STEEL LEVEL 58 951'-0"1/2
T/STEEL LEVEL 57 937'-6"1/2
T/STEEL LEVEL 56 924'-0"1/2
T/STEEL LEVEL 55 910'-6"1/2
T/STEEL LEVEL 54 897'-0"1/2
T/STEEL LEVEL 53 883'-6"1/2
T/STEEL LEVEL 51 854'-10"1/2
T/STEEL LEVEL 50 841'-4"1/2
T/STEEL LEVEL 49 827'-10"1/2
T/STEEL LEVEL 48 814'-4"1/2
T/STEEL LEVEL 47 800'-10"1/2
T/STEEL LEVEL 46 787'-4"1/2
T/STEEL LEVEL 45 773'-10"1/2
T/STEEL LEVEL 44 760'-4"1/2
T/STEEL LEVEL 43 748'-9"1/2
T/STEEL LEVEL 42 735'-3"1/2
T/STEEL LEVEL 41 719'-10"9/16

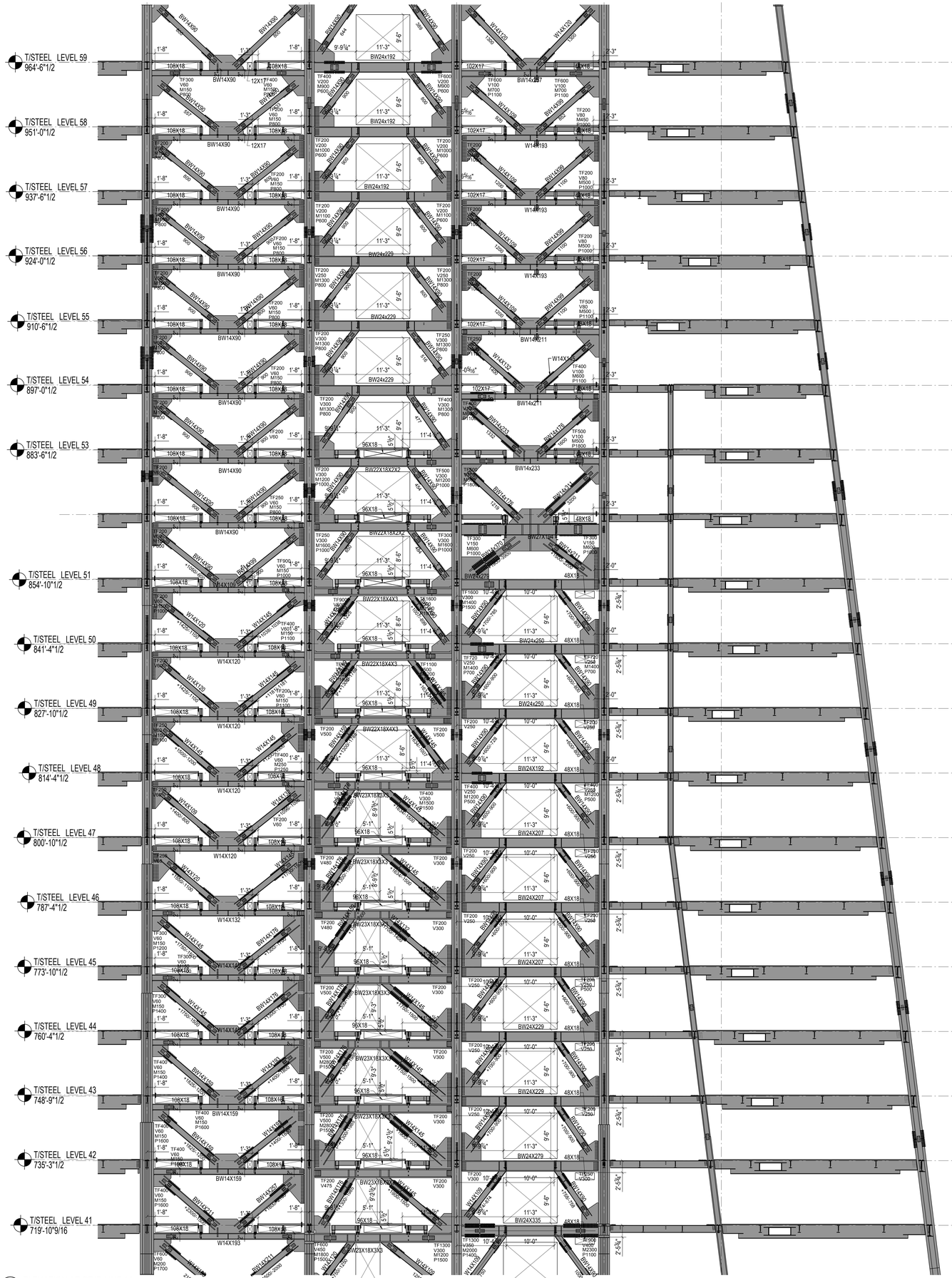

1 ELEVATION AT GRID LINE 14
1/8" = 1'-0"

SHEET NOTES :

1. UNO, AT BRACED FRAME BEAMS INDICATED ON THIS ELEVATION, PROVIDE 2 STUDS/FT. FOR ALL REGIONS WHERE SLAB IS PRESENT ALONG THE BEAM LENGTH.

Damian Titus
Buildings
APPROVED
Under Directive 2 of 1975
AMENDED APPLICATION
Date: 05/03/2017
NYC Development Hub

HUDSON YARDS - RETAIL PODIUM AND TOWER A
500 WEST 33RD STREET
New York, NY

Client
Related Companies
60 Columbus Circle
New York, NY 10023
TEL: 212.801.1000 FAX: 212.801.1048

Oxford Properties Group
320 Park Avenue, 17th Floor
New York, NY 10022
TEL: 212.986.7514 FAX: 212.986.7510

Architect
Kohn Pedersen Fox Associates
11 West 42nd Street
New York, New York 10036
TEL: 212.977.6500 FAX: 212.956.2526

Structural Engineer
Thornton Tomasetti, Inc.
51 Madison Avenue
New York, New York 10010
TEL: 917.661.7800 FAX: 718.661.7801

Mechanical, Electrical, Plumbing, Fire Protection
Jaros Baum & Bolles Consulting Engineers
80 Pine Street
New York, NY 10013
TEL: 212.530.9300 FAX: 212.269.5894

Retail Interior Design & Planning
Elkus-Manfredi
300 A Street
Boston, MA 02210
TEL: 617.426.1300

No.	Description	Date
2	D.O.B AMENDMENT #2	10/15/2016
1	D.O.B BUILDING PERMIT FILING	12/10/2014

Key Plan

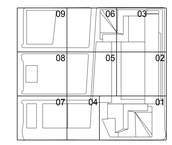

Issue Date 12/10/2014
Project No. N11328.00
Drawn By:
Sheet Number

STATE OF NEW YORK DARRYL J. SOLIS 029 LICENSED PROFESSIONAL ENGINEER

HYE-TA-S2-5072
Drawing Title

LEVELS 41-59 - EAST-WEST BRACING SECTIONS

Drawing Number
S2-5072
Re-Issue Drawing Number
S-502.01

© 2013 KOHN PEDERSEN FOX ASSOCIATES PC. All rights reserved.

CAD ID: ACAD2013/DOCS Job Number 8350507/2499 Model Date

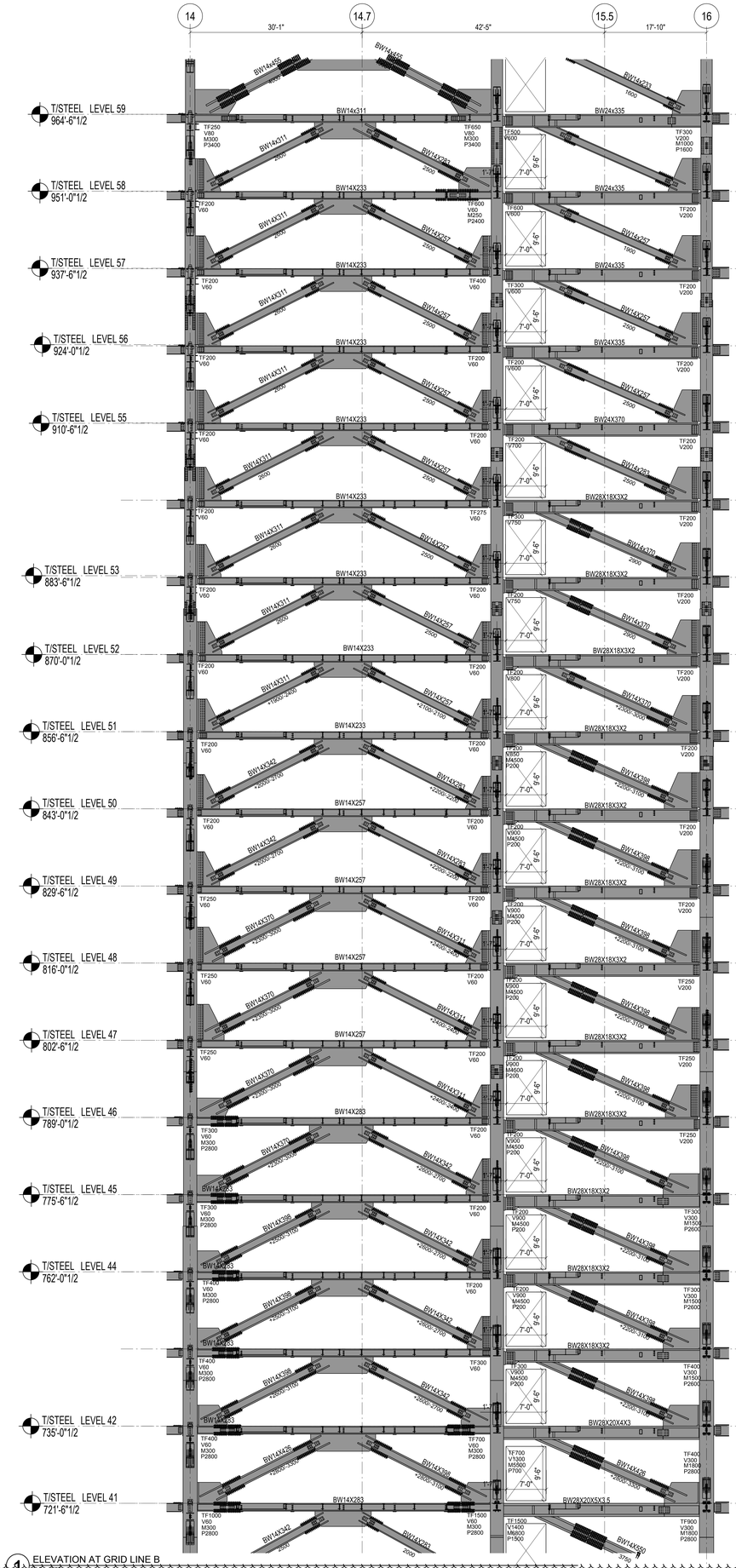

1 ELEVATION AT GRID LINE B

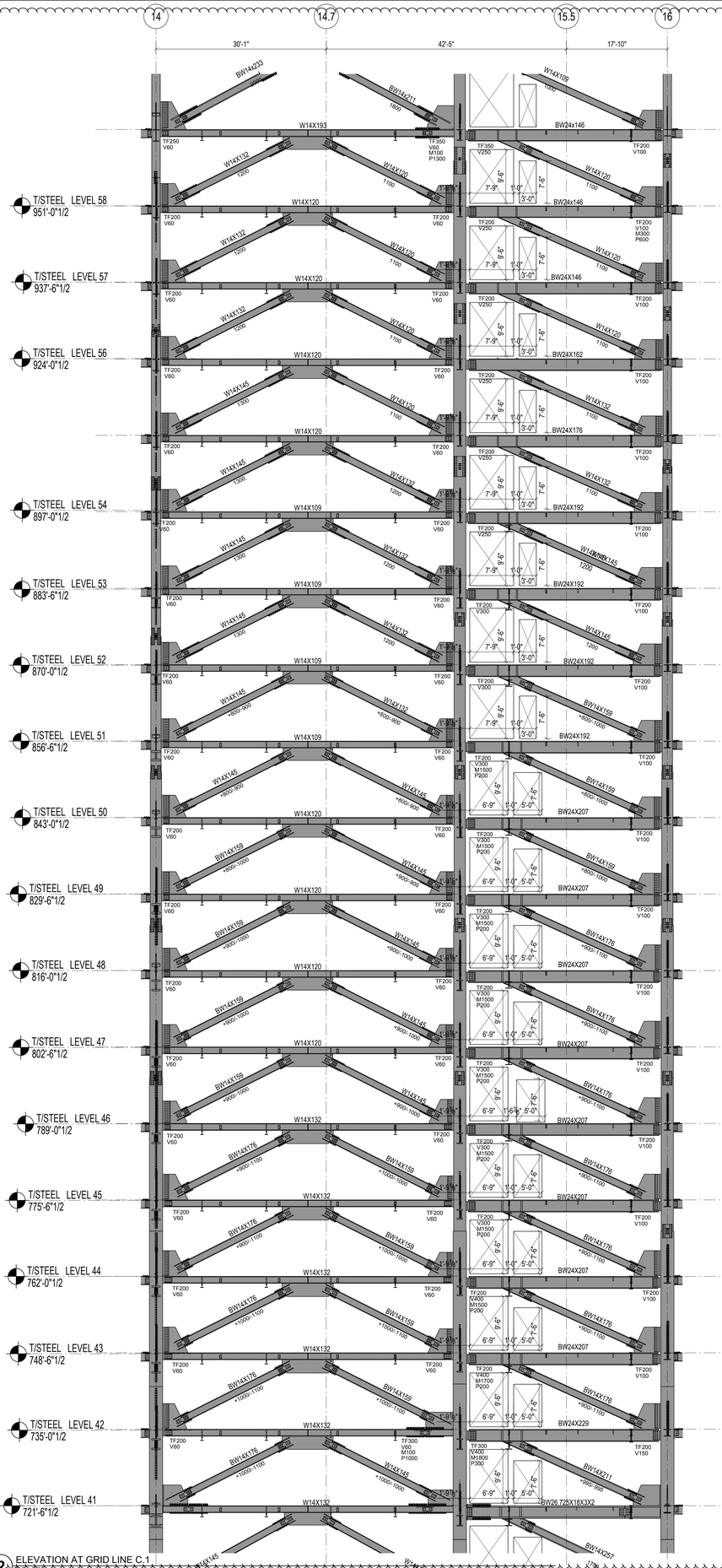

2 ELEVATION AT GRID LINE C.1

SHEET NOTES :

1. UNO, AT BRACED FRAME BEAMS INDICATED ON THIS ELEVATION, PROVIDE 2 STUDS/FT. FOR ALL REGIONS WHERE SLAB IS PRESENT ALONG THE BEAM LENGTH.

HUDSON YARDS - RETAIL PODIUM AND TOWER A

500 WEST 33RD STREET
New York, NY

Client
Related Companies
60 Columbus Circle
New York, NY 10023
TEL: 212.801.1000 FAX: 212.801.1048

Oxford Properties Group
320 Park Avenue, 17th Floor
New York, NY 10022
TEL: 212.986.7514 FAX: 212.986.7510

Architect
Kohn Pedersen Fox Associates
11 West 42nd Street
New York, New York 10036
TEL: 212.977.6500 FAX: 212.956.2526

Structural Engineer
Thornton Tomasetti, Inc.
51 Madison Avenue
New York, New York 10010
TEL: 917.661.7800 FAX: 718.661.7801

Mechanical, Electrical, Plumbing, Fire Protection
Jaros Baum & Bolles Consulting Engineers
80 Pine Street
New York, NY 10013
TEL: 212.530.9300 FAX: 212.269.5894

Retail Interior Design & Planning
Elkus-Manfredi
300 A Street
Boston, MA 02210
TEL: 617.426.1300

No.	Description	Date
2	D.O.B AMENDMENT #2	10/15/2016
1	D.O.B BUILDING PERMIT FILING	12/10/2014

Key Plan

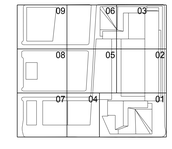

Damian Titus
Buildings
APPROVED
Under Directive 2 of 1975
MECHANICAL APPLICATION
Date: 05/03/2017
NYC Development Hub

Issue Date 12/10/2014
Project No. N11328.00
Drawn By
Sheet Number

HYE-TA-S2-5073
Drawing Title

LEVELS 41-59 - NORTH-SOUTH BRACING SECTIONS

Drawing Number
S2-5073
Sheet Drawing Number
S-503.01

© 2013 KOHN PEDERSEN FOX ASSOCIATES PC. All rights reserved.

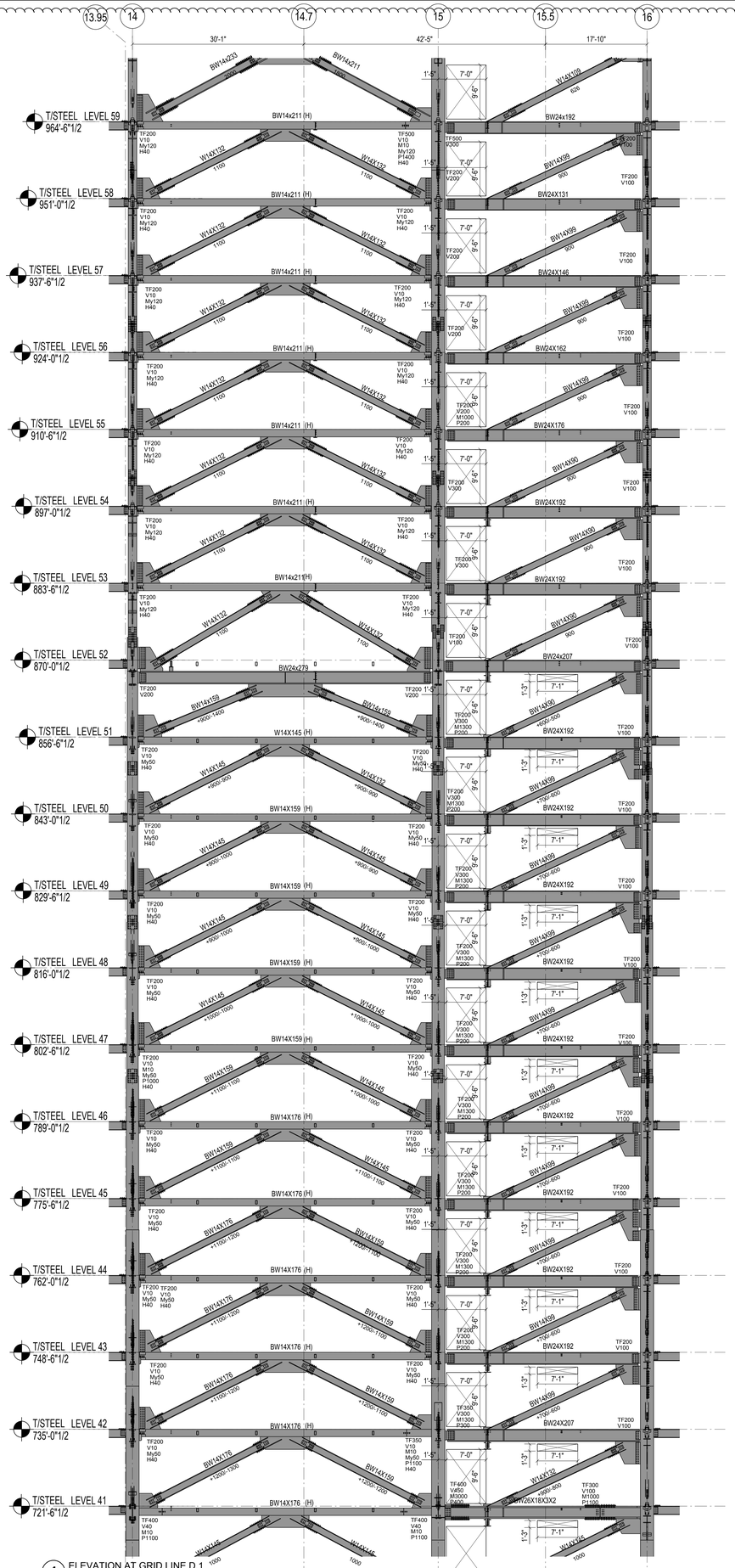

1 ELEVATION AT GRID LINE D.1
1/16" = 1'-0"

SHEET NOTES :

1. UNO, AT BRACED FRAME BEAMS INDICATED ON THIS ELEVATION, PROVIDE 2 STUDS/FT. FOR ALL REGIONS WHERE SLAB IS PRESENT ALONG THE BEAM LENGTH.

Damian Titus
Buildings
APPROVED
Under Directive 2 of 1975
AMENDED APPLICATION
Date: 05/03/2017
NYC Development Hub

HUDSON YARDS - RETAIL PODIUM AND TOWER A

500 WEST 33RD STREET
New York, NY

Client
Related Companies
60 Columbus Circle
New York, NY 10023
TEL: 212.801.1000 FAX: 212.801.1048

Oxford Properties Group
320 Park Avenue, 17th Floor
New York, NY 10022
TEL: 212.986.7514 FAX: 212.986.7510

Architect
Kohn Pedersen Fox Associates
11 West 42nd Street
New York, New York 10036
TEL: 212.977.6500 FAX: 212.956.2526

Structural Engineer
Thornton Tomasetti, Inc.
51 Madison Avenue
New York, New York 10010
TEL: 917.661.7800 FAX: 718.661.7801

Mechanical, Electrical, Plumbing, Fire Protection
Jaros Baum & Bolles Consulting Engineers
80 Pine Street
New York, NY 10013
TEL: 212.530.9300 FAX: 212.269.5894

Retail Interior Design & Planning
Elkus-Manfredi
300 A Street
Boston, MA 02210
TEL: 617.426.1300

No.	Description	Date
2	D.O.B AMENDMENT #2	10/15/2016
1	D.O.B BUILDING PERMIT FILING	12/10/2014

Key Plan

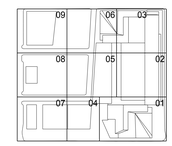

Issue Date 12/10/2014
Project No. N11328.00
Drawn By:
Sheet Number

STATE OF NEW YORK — DAMIAN TITUS — 035 — LICENSED PROFESSIONAL ENGINEER

HYE-TA-S2-5074
Drawing Title

LEVELS 41-59 - NORTH-SOUTH BRACING SECTION

Drawing Number
S2-5074
B-Scan Drawing Number

S-504.01

© 2013 KOHN PEDERSEN FOX ASSOCIATES PC. All rights reserved.

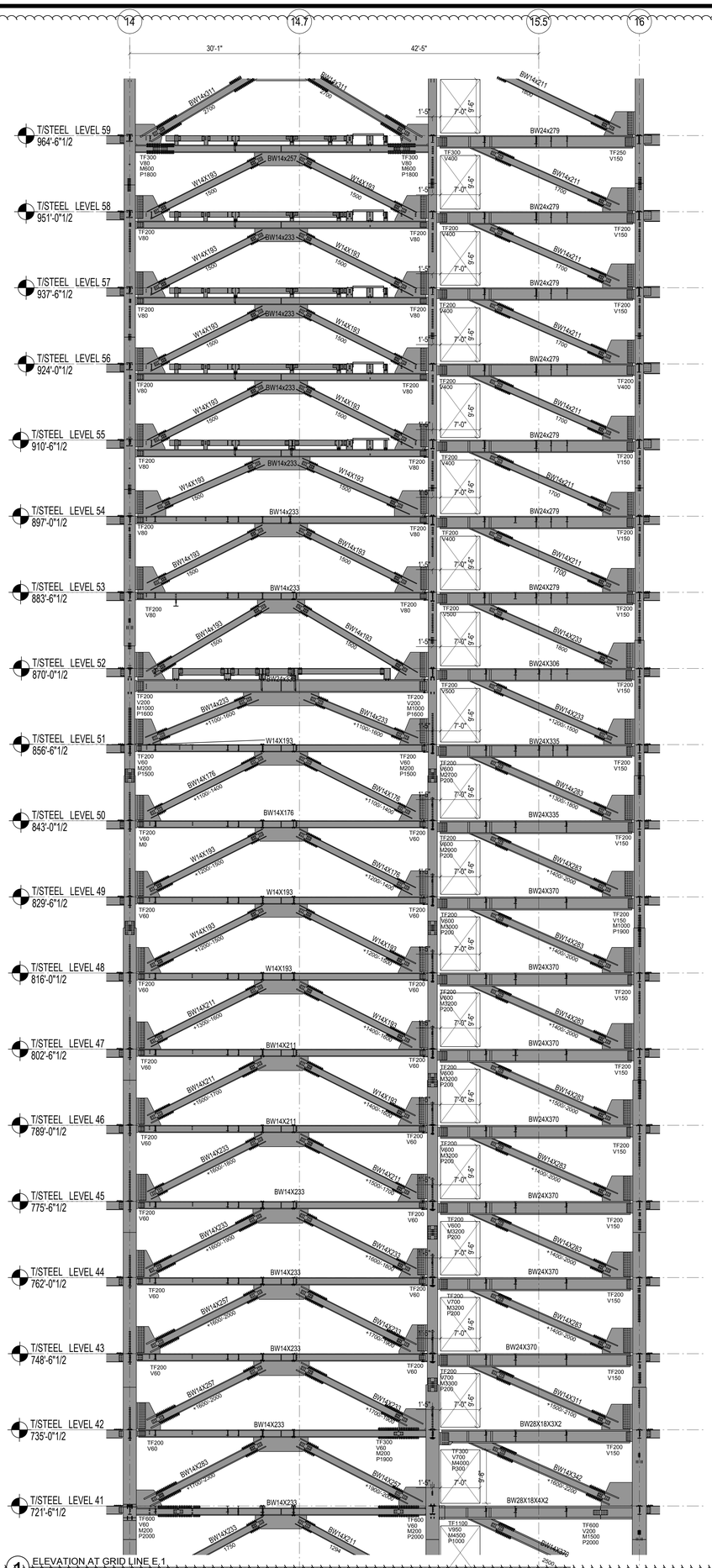

1 ELEVATION AT GRID LINE E.1
1/8" = 1'-0"

SHEET NOTES :

1. UNO, AT BRACED FRAME BEAMS INDICATED ON THIS ELEVATION, PROVIDE 2 STUDS/1FT. FOR ALL REGIONS WHERE SLAB IS PRESENT ALONG THE BEAM LENGTH.

Damian Titus
Buildings
APPROVED
Under Directive 3 of 1975
AMENDED APPLICATION
Date: 05/03/2017
NYC Development Hub

HUDSON YARDS - RETAIL PODIUM AND TOWER A

500 WEST 33RD STREET
New York, NY

Client
Related Companies
60 Columbus Circle
New York, NY 10023
TEL: 212.801.1000 FAX: 212.801.1048

Oxford Properties Group
320 Park Avenue, 17th Floor
New York, NY 10022
TEL: 212.986.7514 FAX: 212.986.7510

Architect
Kohn Pedersen Fox Associates
11 West 42nd Street
New York, New York 10036
TEL: 212.977.6500 FAX: 212.956.2526

Structural Engineer
Thornton Tomasetti, Inc.
51 Madison Avenue
New York, New York 10010
TEL: 917.661.7800 FAX: 718.661.7801

Mechanical, Electrical, Plumbing, Fire Protection
Jaros Baum & Bolles Consulting Engineers
80 Pine Street
New York, NY 10013
TEL: 212.530.9300 FAX: 212.269.5894

Retail Interior Design & Planning
Elkus-Manfredi
300 A Street
Boston, MA 02210
TEL: 617.426.1300

No.	Description	Date
2	D.O.B AMENDMENT #2	10/15/2016
1	D.O.B BUILDING PERMIT FILING	12/10/2014

Key Plan

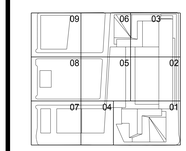

Issue Date 12/10/2014
Project No. N11328.00
Drawn By
Sheet Number

HYE-TA-S2-5075
Drawing Title

LEVELS 41-59 - NORTH-SOUTH BRACING SECTION

Drawing Number
S2-5075
K-Scan Drawing Number
S-505.01

© 2013 KOHN PEDERSEN FOX ASSOCIATES PC. All rights reserved.

DEPT OF BLDGS 421395255 Job Number
B3933B3D95 Scan Code

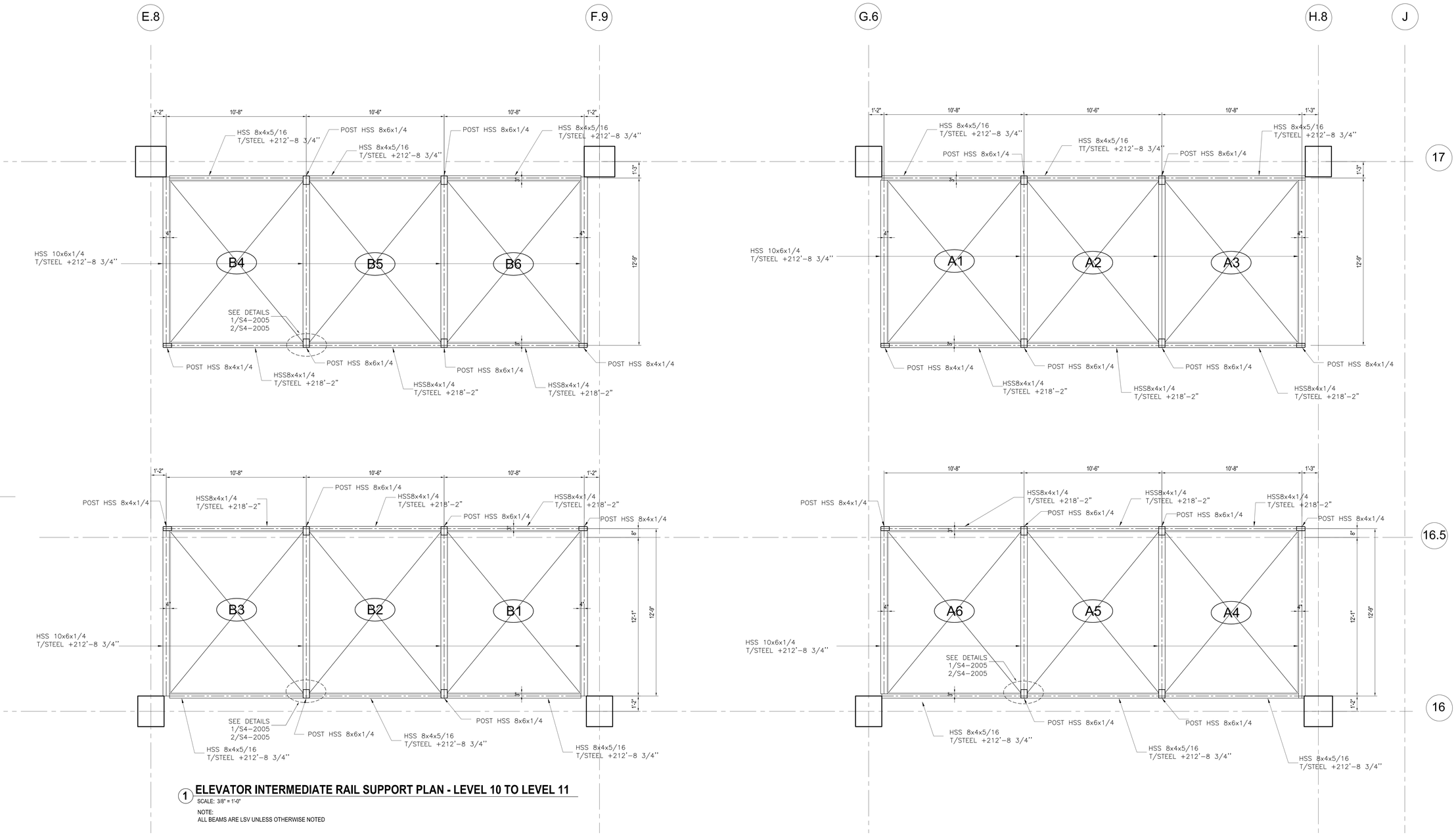

1 ELEVATOR INTERMEDIATE RAIL SUPPORT PLAN - LEVEL 10 TO LEVEL 11

SCALE: 3/8" = 1'-0"

NOTE:
ALL BEAMS ARE LSV UNLESS OTHERWISE NOTED

HUDSON YARDS - RETAIL PODIUM AND TOWER A

500 WEST 33RD STREET
New York, NY

Client
Related Companies
60 Columbus Circle
New York, NY 10023
TEL: 212.801.1000 FAX: 212.801.1048

Oxford Properties Group
320 Park Avenue, 17th Floor
New York, NY 10022
TEL: 212.986.7514 FAX: 212.986.7510

Architect
Kohn Pedersen Fox Associates
11 West 42nd Street
New York, New York 10036
TEL: 212.977.6500 FAX: 212.956.2526

Structural Engineer
Thornton Tomasetti, Inc.
51 Madison Avenue
New York, New York 10010
TEL: 917.661.7800 FAX: 718.661.7801

Mechanical, Electrical, Plumbing, Fire Protection
Jaros Baum & Bolles Consulting Engineers
80 Pine Street
New York, NY 10013
TEL: 212.530.9300 FAX: 212.269.5894

Retail Interior Design & Planning
Elkus-Manfredi
300 A Street
Boston, MA 02210
TEL: 617.426.1300

No.	Description	Date
1	D.O.B. AMENDMENT #2	10/15/2016

Key Plan

Issue Date: 10/15/2016
Project No. N11328.00
Drawn By: Author
Sheet Number

Damian Titus
Buildings
APPROVED
Under Directive 2 of 1975
AMENDED APPLICATION
Date: 05/03/2017
NYC Development Hub

TOWER A ELEVATOR INTERMEDIATE SUPPORT PART PLANS XIII

Drawing Number
S3-6113
If Scan Drawing Number
S-506.00 SHEET 290 OF 443

© 2013 KOHN PEDERSEN FOX ASSOCIATES PC. All rights reserved.

DEPT OF BLDGS 421195255 Job Number
E3852340384 Scan Code

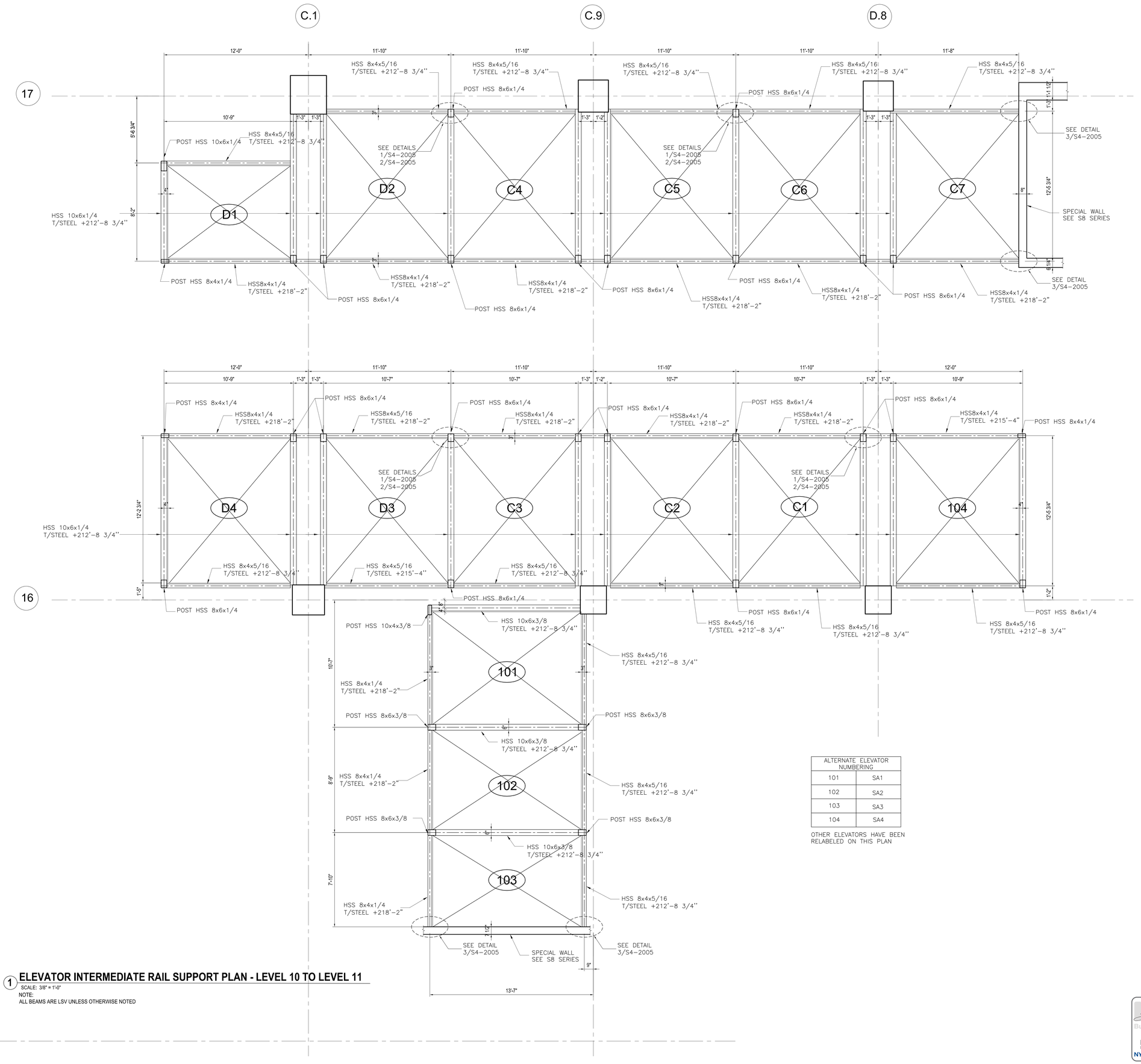

ALTERNATE ELEVATOR NUMBERING	
101	SA1
102	SA2
103	SA3
104	SA4

OTHER ELEVATORS HAVE BEEN RELABELED ON THIS PLAN

1 ELEVATOR INTERMEDIATE RAIL SUPPORT PLAN - LEVEL 10 TO LEVEL 11

SCALE: 3/8" = 1'-0"

NOTE:
ALL BEAMS ARE LSV UNLESS OTHERWISE NOTED

HUDSON YARDS - RETAIL PODIUM AND TOWER A

500 WEST 33RD STREET
New York, NY

Client
Related Companies
60 Columbus Circle
New York, NY 10023
TEL: 212.801.1000 FAX: 212.801.1048

Oxford Properties Group
320 Park Avenue, 17th Floor
New York, NY 10022
TEL: 212.986.7514 FAX: 212.986.7510

Architect
Kohn Pedersen Fox Associates
11 West 42nd Street
New York, New York 10036
TEL: 212.977.6500 FAX: 212.956.2526

Structural Engineer
Thornton Tomasetti, Inc.
51 Madison Avenue
New York, New York 10010
TEL: 917.661.7800 FAX: 718.661.7801

Mechanical, Electrical, Plumbing, Fire Protection
Jaros Baum & Bolles Consulting Engineers
80 Pine Street
New York, NY 10013
TEL: 212.530.9300 FAX: 212.269.5894

Retail Interior Design & Planning
Elkus-Manfredi
300 A Street
Boston, MA 02210
TEL: 617.426.1300

No.	Description	Date
1	D.O.B. AMENDMENT #2	10/15/2016

Key Plan

Issue Date: 10/15/2016
Project No. N11328.00
Drawn By Author
Sheet Number

Damian Titus
Buildings
APPROVED
Under Directive 1 of 1975
AMENDED APPLICATION
Date: 05/03/2017
NYC Development Hub

Drawing Title
TOWER A ELEVATOR INTERMEDIATE SUPPORT PART PLANS XIV

Drawing Number
S3-6114
BCAM Drawing Number
S-507.00 SHEET 291 OF 443

© 2017 Kohn Pedersen Fox Associates, Related, Oxford, Elkus Manfredi, Thornton Tomasetti, Jaros Baum & Bolles. All rights reserved.

DEPT OF BLDGS 421395255 Job Number
B3843671626 Scan Code

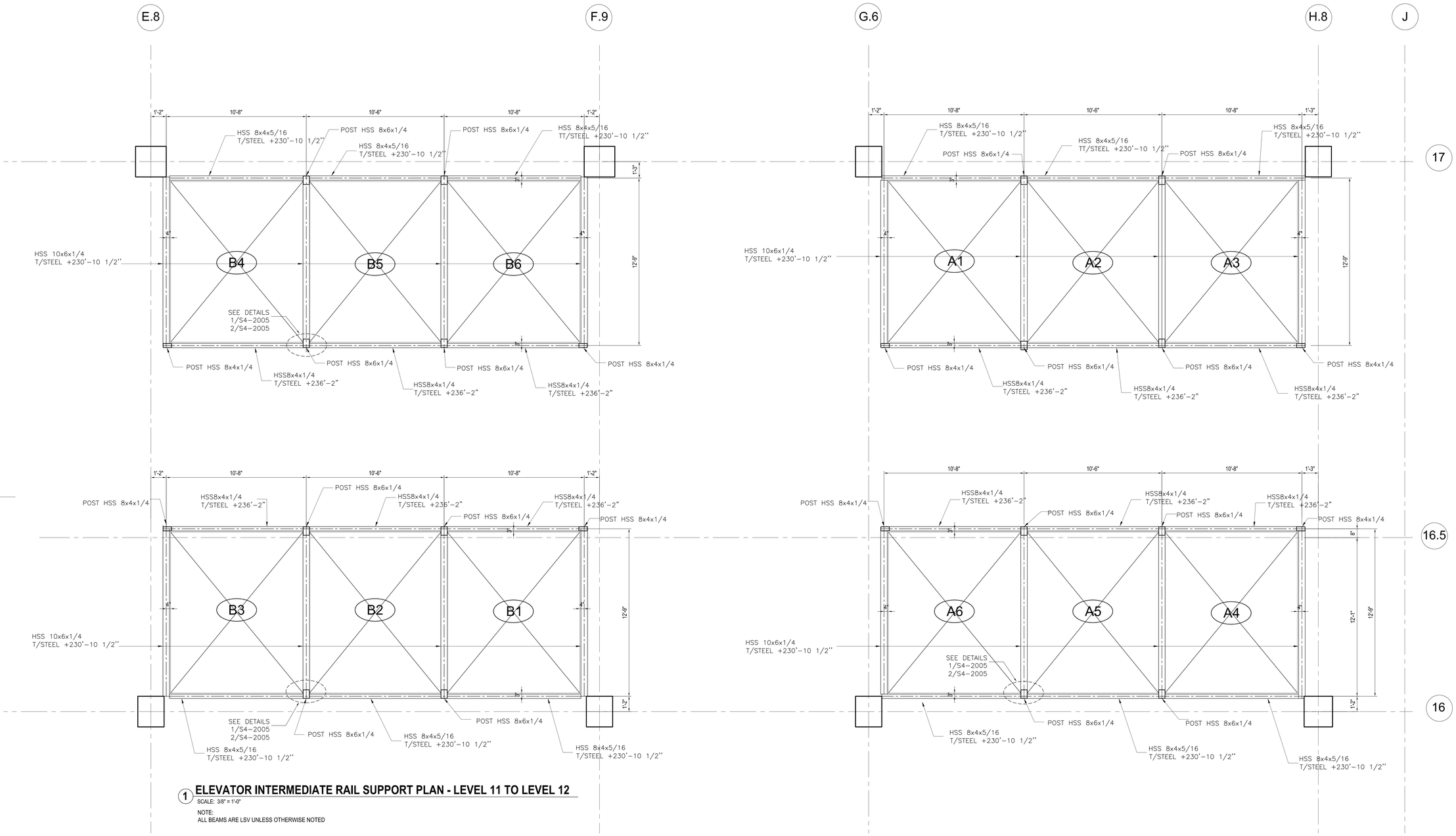

1 ELEVATOR INTERMEDIATE RAIL SUPPORT PLAN - LEVEL 11 TO LEVEL 12

SCALE: 3/8" = 1'-0"

NOTE:
ALL BEAMS ARE LSV UNLESS OTHERWISE NOTED

HUDSON YARDS - RETAIL PODIUM AND TOWER A

500 WEST 33RD STREET
New York, NY

Client
Related Companies
60 Columbus Circle
New York, NY 10023
TEL: 212.801.1000 FAX: 212.801.1048

Oxford Properties Group
320 Park Avenue, 17th Floor
New York, NY 10022
TEL: 212.986.7514 FAX: 212.986.7510

Architect
Kohn Pedersen Fox Associates
11 West 42nd Street
New York, New York 10036
TEL: 212.977.6500 FAX: 212.956.2526

Structural Engineer
Thornton Tomasetti, Inc.
51 Madison Avenue
New York, New York 10010
TEL: 917.661.7800 FAX: 718.661.7801

Mechanical, Electrical, Plumbing, Fire Protection
Jaros Baum & Bolles Consulting Engineers
80 Pine Street
New York, NY 10013
TEL: 212.530.9300 FAX: 212.269.5894

Retail Interior Design & Planning
Elkus-Manfredi
300 A Street
Boston, MA 02210
TEL: 617.426.1300

No.	Description	Date
1	D.O.B. AMENDMENT #2	10/15/2016

Key Plan

Issue Date: 10/15/2016
Project No. N11328.00
Drawn By: Author
Sheet Number

Damian Titus
Buildings
APPROVED
Under Directive 2 of 1975
AMENDED APPLICATION
Date: 05/01/2017
NYC Development Hub

TOWER A ELEVATOR INTERMEDIATE SUPPORT PART PLANS XV

Drawing Number
S3-6115
If Scan Drawing Number
S-508.00 SHEET 292 OF 443

© 2013 KOHN PEDERSEN FOX ASSOCIATES PC. All rights reserved.

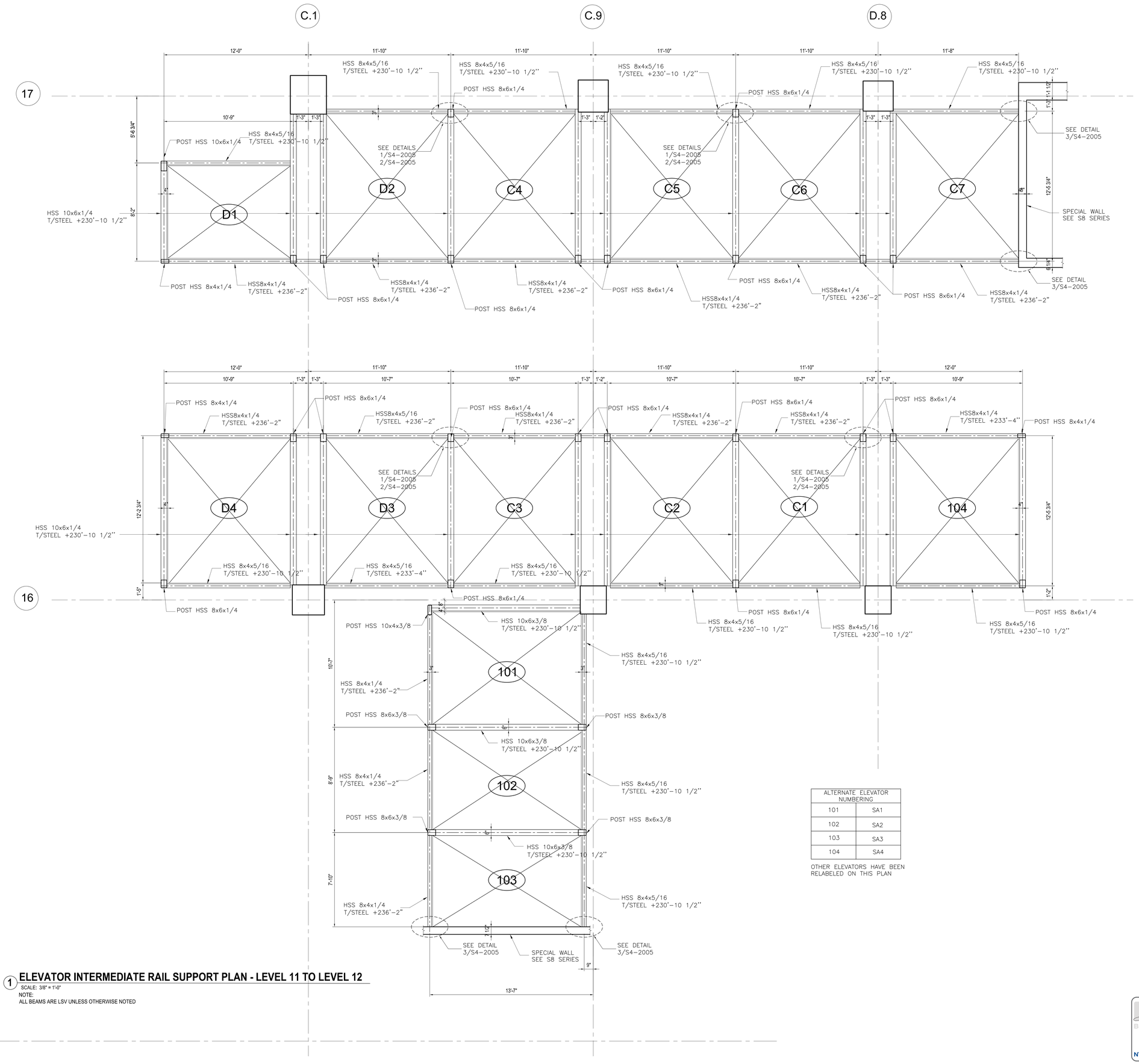

ALTERNATE ELEVATOR NUMBERING	
101	SA1
102	SA2
103	SA3
104	SA4

OTHER ELEVATORS HAVE BEEN RELABELED ON THIS PLAN

1 ELEVATOR INTERMEDIATE RAIL SUPPORT PLAN - LEVEL 11 TO LEVEL 12

SCALE: 3/8" = 1'-0"

NOTE:
ALL BEAMS ARE LSV UNLESS OTHERWISE NOTED

HUDSON YARDS - RETAIL PODIUM AND TOWER A

500 WEST 33RD STREET
New York, NY

Client
Related Companies
60 Columbus Circle
New York, NY 10023
TEL: 212.801.1000 FAX: 212.801.1048

Oxford Properties Group
320 Park Avenue, 17th Floor
New York, NY 10022
TEL: 212.986.7514 FAX: 212.986.7510

Architect
Kohn Pedersen Fox Associates
11 West 42nd Street
New York, New York 10036
TEL: 212.977.6500 FAX: 212.956.2526

Structural Engineer
Thornton Tomasetti, Inc.
51 Madison Avenue
New York, New York 10010
TEL: 917.661.7800 FAX: 718.661.7801

Mechanical, Electrical, Plumbing, Fire Protection
Jaros Baum & Bolles Consulting Engineers
80 Pine Street
New York, NY 10013
TEL: 212.530.9300 FAX: 212.269.5894

Retail Interior Design & Planning
Elkus-Manfredi
300 A Street
Boston, MA 02210
TEL: 617.426.1300

No.	Description	Date
1	D.O.B. AMENDMENT #2	10/15/2016

Key Plan

Issue Date: 10/15/2016
Project No. N11328.00
Drawn By Author
Sheet Number

Damian Titus
Buildings
APPROVED
Under Directive 2 of 1975
AMENDED APPLICATION
Date: 05/03/2017
NYC Development Hub

TOWER A ELEVATOR INTERMEDIATE SUPPORT PART PLANS XVI

Drawing Number
S3-6116
B-Scan Drawing Number
S-509.00

© 2013 KOHN PEDERSEN FOX ASSOCIATES PC. All rights reserved.

SHEET NOTES :

1. UNO, AT BRACED FRAME BEAMS INDICATED ON THIS ELEVATION, PROVIDE 2 STUDS/FT. FOR ALL REGIONS WHERE SLAB IS PRESENT ALONG THE BEAM LENGTH.

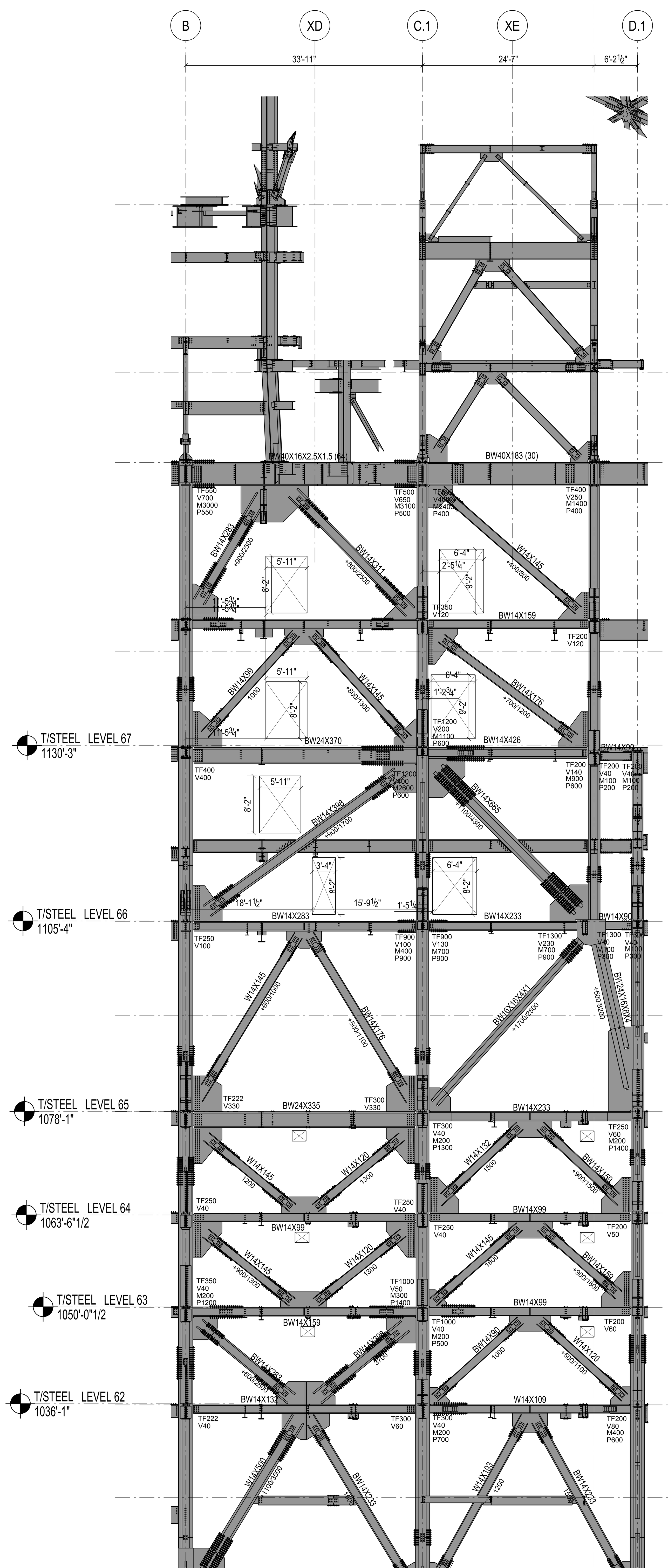

1 ELEVATION AT GRID LINE 16
⅛" = 1'-0"

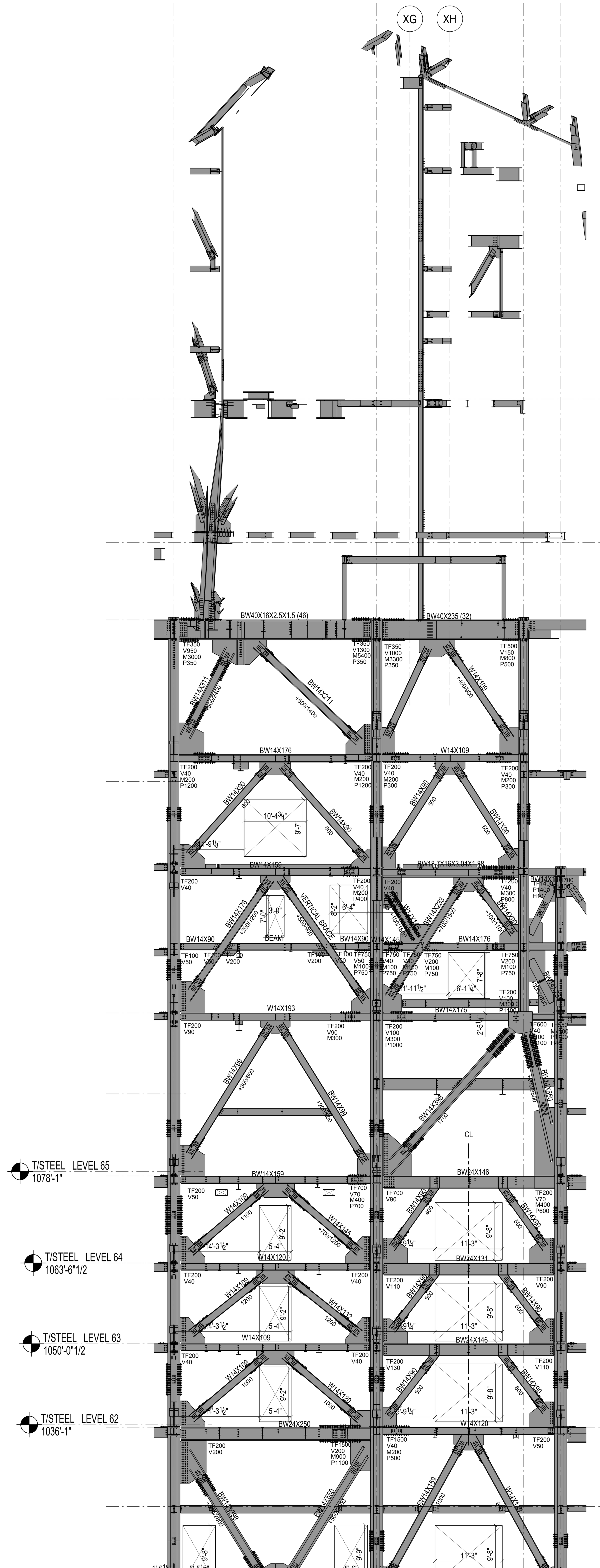

2 ELEVATION AT GRID LINE 15
⅛" = 1'-0"

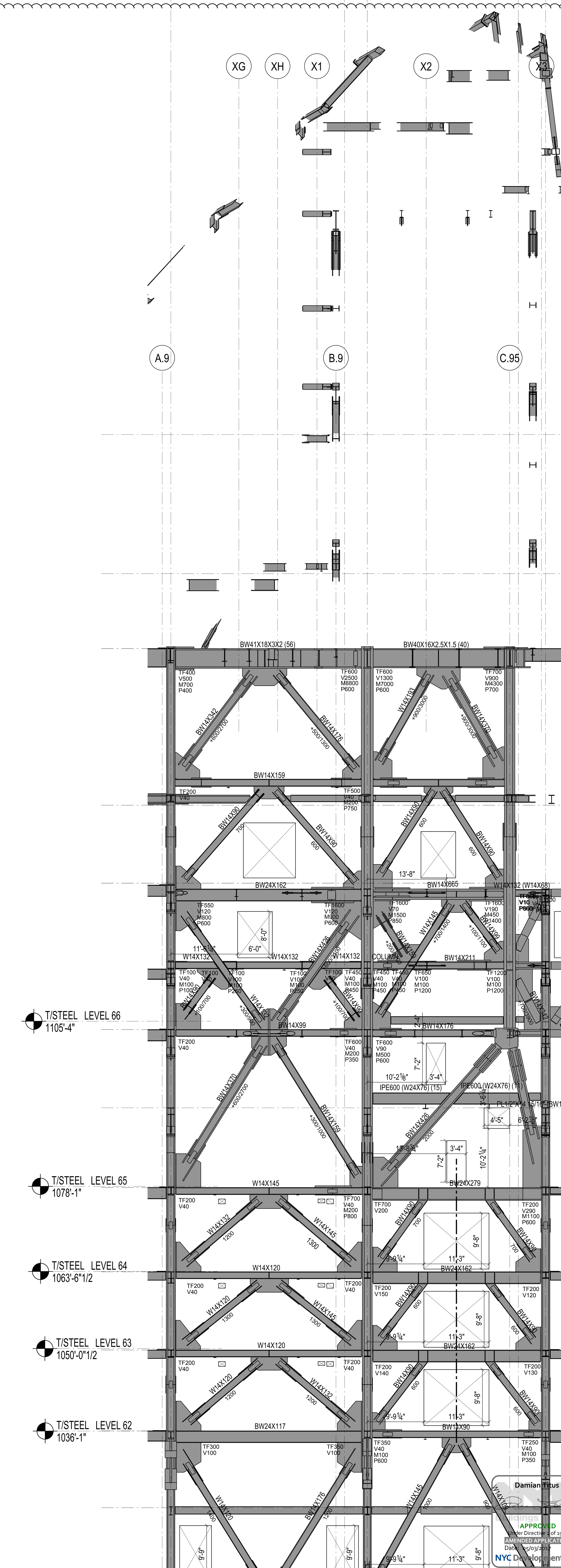

3 ELEVATION AT GRID LINE 14.75
⅛" = 1'-0"

DEPT OF BLDGS 121186251 Job Number

ES657554172 Scan Code

HUDSON YARDS - RETAIL PODIUM AND TOWER A

500 WEST 33RD STREET
New York, NY

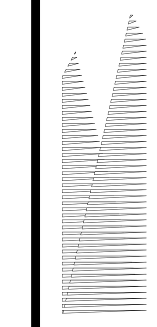

Client
Related Companies
60 Columbus Circle
New York, NY 10023
TEL: 212.801.1000 FAX: 212.801.1048

Oxford Properties Group
320 Park Avenue, 17th Floor
New York, NY 10022
TEL: 212.986.7514 FAX: 212.986.7510

Architect
Kohn Pedersen Fox Associates
11 West 42nd Street
New York, New York 10036
TEL: 212.977.6500 FAX: 212.956.2526

Structural Engineer
Thornton Tomasetti, Inc.
51 Madison Avenue
New York, New York 10010
TEL: 917.661.7800 FAX: 718.661.7801

Mechanical, Electrical, Plumbing, Fire Protection
Jaros Baum & Bolles Consulting Engineers
80 Pine Street
New York, NY 10013
TEL: 212.530.9300 FAX: 212.269.5894

Retail Interior Design & Planning
Elkus-Manfredi
300 A Street
Boston, MA 02210
TEL: 617.426.1300

No.	Description	Date
2	D.O.B AMENDMENT #2	10/15/2016
1	D.O.B BUILDING PERMIT FILING	12/10/2014

Key Plan

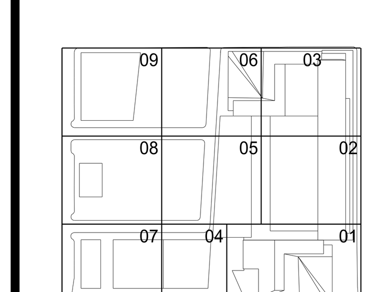

Issue Date 12/10/2014
Project No. N11328.00
Drawn By
Sheet Number

STATE OF NEW YORK · MICHAEL J. SQUARZINI · No. 080640 · LICENSED PROFESSIONAL ENGINEER

Damian Titus
NYC Buildings
APPROVED
Under Directive 2 of 1975
AMENDED APPLICATION
Date: 05/03/2017
NYC Development Hub

HYE-TA-S2-5080
Drawing Title

LEVELS 62-TOP - EAST-WEST BRACING SECTIONS

Drawing Number
S2-5080
B-Scan Drawing Number
S-510.01

SHEET 252 OF 443

© 2013 KOHN PEDERSEN FOX ASSOCIATES PC. All rights reserved.

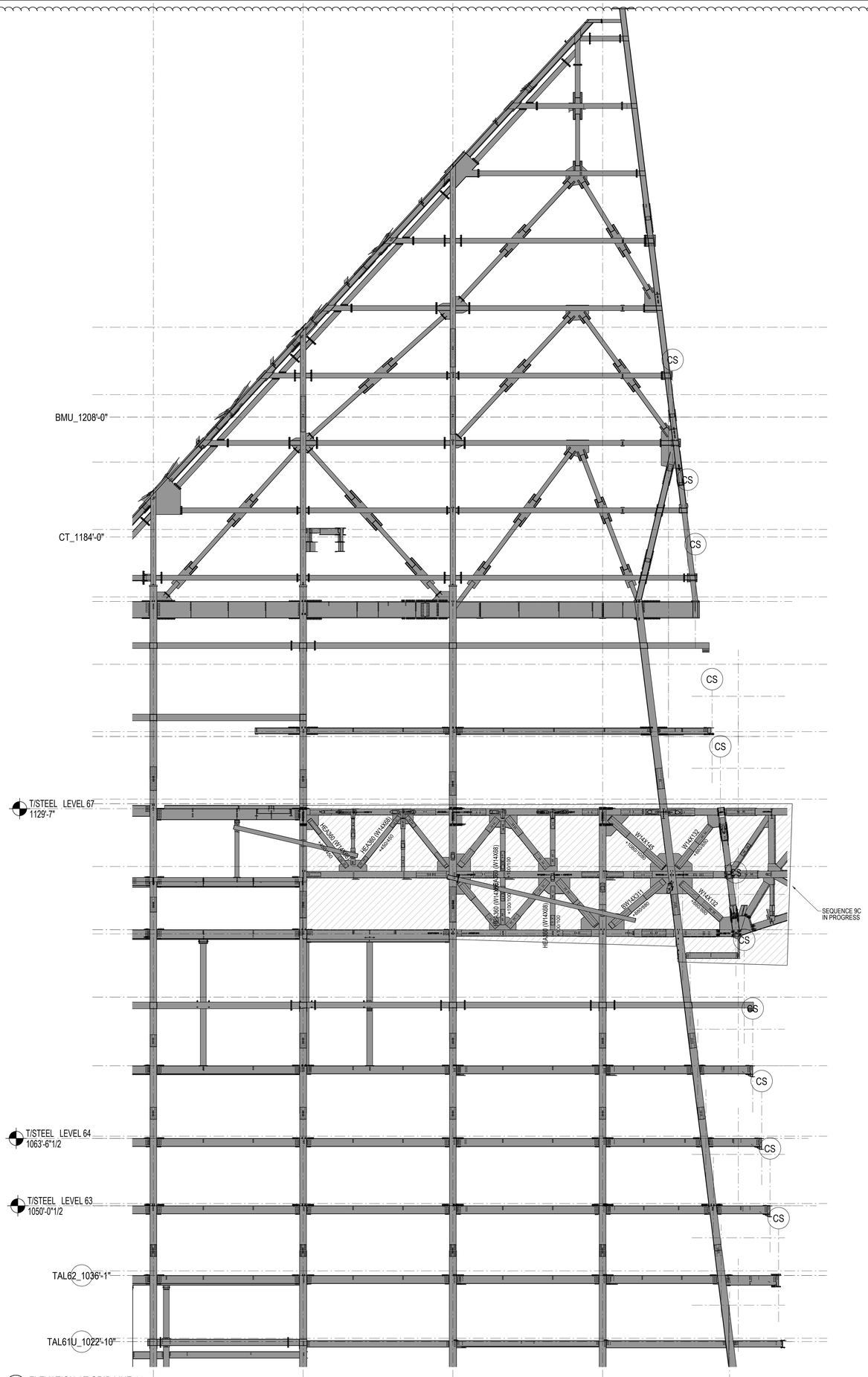

1 ELEVATION AT GRID LINE 14
3/8" = 1'-0"

SHEET NOTES :

1. UNO, AT BRACED FRAME BEAMS INDICATED ON THIS ELEVATION, PROVIDE 2 STUDS/FT. FOR ALL REGIONS WHERE SLAB IS PRESENT ALONG THE BEAM LENGTH.

Damian Titus
APPROVED
Under Directive 2 of 1975
AMENDED APPLICATION
Date: 05/03/2017
NYC Development Hub

HUDSON YARDS - RETAIL PODIUM AND TOWER A
500 WEST 33RD STREET
New York, NY

Client
Related Companies
60 Columbus Circle
New York, NY 10023
TEL: 212.801.1000 FAX: 212.801.1048

Oxford Properties Group
320 Park Avenue, 17th Floor
New York, NY 10022
TEL: 212.986.7514 FAX: 212.986.7510

Architect
Kohn Pedersen Fox Associates
11 West 42nd Street
New York, New York 10036
TEL: 212.977.6500 FAX: 212.956.2526

Structural Engineer
Thornton Tomasetti, Inc.
51 Madison Avenue
New York, New York 10010
TEL: 917.661.7800 FAX: 718.661.7801

Mechanical, Electrical, Plumbing, Fire Protection
Jaros Baum & Bolles Consulting Engineers
80 Pine Street
New York, NY 10013
TEL: 212.530.9300 FAX: 212.269.5894

Retail Interior Design & Planning
Elkus-Manfredi
300 A Street
Boston, MA 02210
TEL: 617.426.1300

No.	Description	Date
2	D.O.B AMENDMENT #2	10/15/2016
1	D.O.B BUILDING PERMIT FILING	12/10/2014

Key Plan

09 06 03
08 05 02
07 04 01

Issue Date 12/10/2014
Project No. N11328.00
Drawn By
Sheet Number

HYE-TA-S2-5081
Drawing Title

LEVELS 62-TOP - EAST-WEST BRACING SECTION

Drawing Number
S2-5081
B-Scan Drawing Number
S-511.01

© 2013 KOHN PEDERSEN FOX ASSOCIATES PC. All rights reserved.

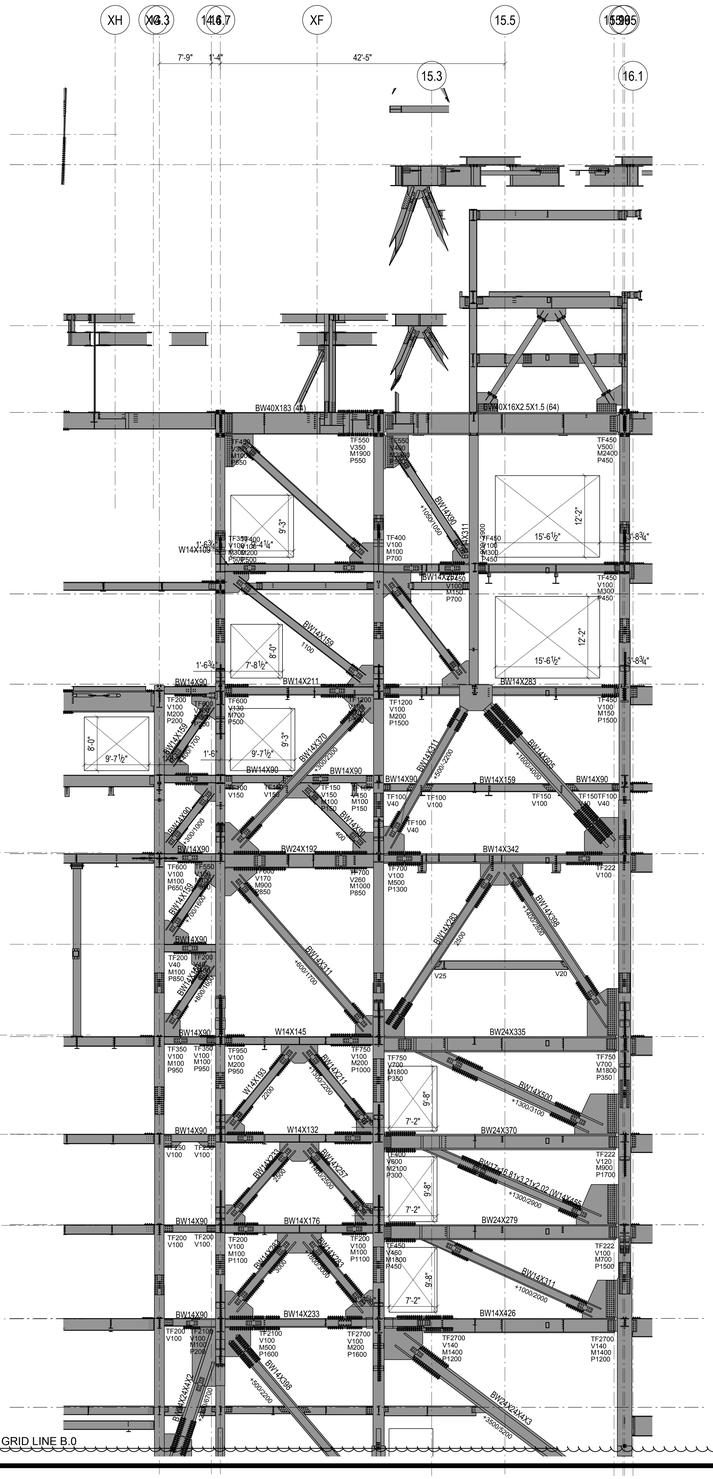

1 ELEVATION AT GRID LINE B.0
1/8" = 1'-0"

2 ELEVATION AT GRID LINE C.1
1/8" = 1'-0"

SHEET NOTES :

1. UNO, AT BRACED FRAME BEAMS INDICATED ON THIS ELEVATION, PROVIDE 2 STUDS/FT. FOR ALL REGIONS WHERE SLAB IS PRESENT ALONG THE BEAM LENGTH.

Damian Titus
Buildings
APPROVED
Under Directive 2 of 1975
AMENDED APPLICATION
Date: 05/03/2017
NYC Development Hub

HUDSON YARDS - RETAIL PODIUM AND TOWER A
500 WEST 33RD STREET
New York, NY

Client
Related Companies
60 Columbus Circle
New York, NY 10023
TEL: 212.801.1000 FAX: 212.801.1048

Oxford Properties Group
320 Park Avenue, 17th Floor
New York, NY 10022
TEL: 212.986.7514 FAX: 212.986.7510

Architect
Kohn Pedersen Fox Associates
11 West 42nd Street
New York, New York 10036
TEL: 212.977.6500 FAX: 212.956.2526

Structural Engineer
Thornton Tomasetti, Inc.
51 Madison Avenue
New York, New York 10010
TEL: 917.661.7800 FAX: 718.661.7801

Mechanical, Electrical, Plumbing, Fire Protection
Jaros Baum & Bolles Consulting Engineers
80 Pine Street
New York, NY 10013
TEL: 212.530.9300 FAX: 212.269.5894

Retail Interior Design & Planning
Elkus-Manfredi
300 A Street
Boston, MA 02210
TEL: 617.426.1300

No.	Description	Date
2	D.O.B AMENDMENT #2	10/15/2016
1	D.O.B BUILDING PERMIT FILING	12/10/2014

Key Plan

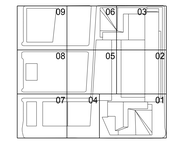

Issue Date 12/10/2014
Project No. N11328.00
Drawn By:
Sheet Number

HYE-TA-S2-5082
Drawing Title

LEVELS 62-TOP - NORTH-SOUTH BRACING SECTIONS

Drawing Number
S2-5082
S-Scan Drawing Number
S-512.01

© 2013 KOHN PEDERSEN FOX ASSOCIATES PC. All rights reserved.

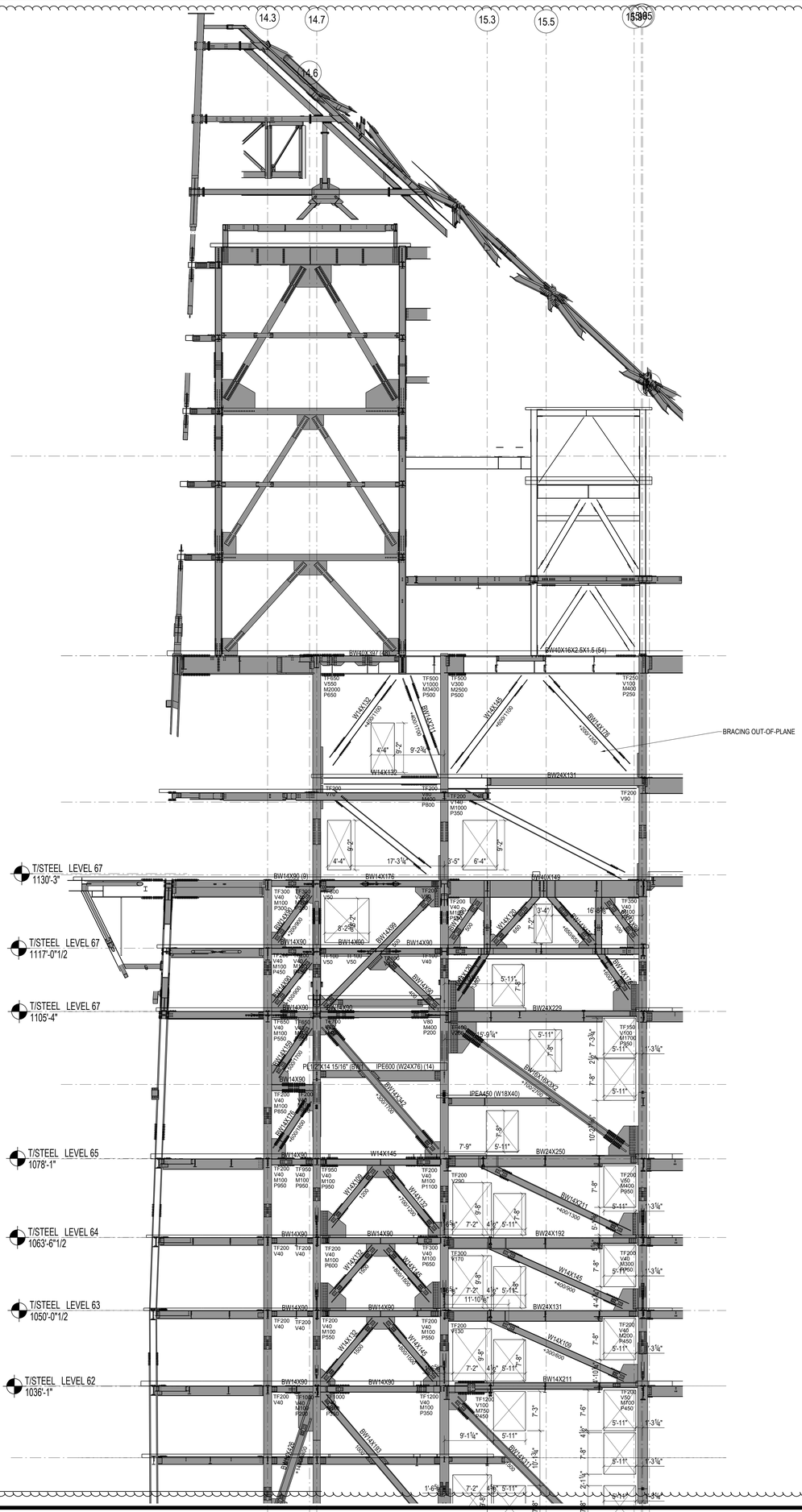

1 ELEVATION AT GRID LINE D.1
1/16" = 1'-0"

SHEET NOTES :

1. UNO, AT BRACED FRAME BEAMS INDICATED ON THIS ELEVATION, PROVIDE 2 STUDS/FT. FOR ALL REGIONS WHERE SLAB IS PRESENT ALONG THE BEAM LENGTH.

Damian Titus
Buildings
APPROVED
Under Directive 2 of 1975
AMENDED APPLICATION
Date: 05/03/2017
NYC Development Hub

HUDSON YARDS - RETAIL PODIUM AND TOWER A

500 WEST 33RD STREET
New York, NY

Client
Related Companies
60 Columbus Circle
New York, NY 10023
TEL: 212.801.1000 FAX: 212.801.1048

Oxford Properties Group
320 Park Avenue, 17th Floor
New York, NY 10022
TEL: 212.986.7514 FAX: 212.986.7510

Architect
Kohn Pedersen Fox Associates
11 West 42nd Street
New York, New York 10036
TEL: 212.977.6500 FAX: 212.956.2526

Structural Engineer
Thornton Tomasetti, Inc.
51 Madison Avenue
New York, New York 10010
TEL: 917.661.7800 FAX: 718.661.7801

Mechanical, Electrical, Plumbing, Fire Protection
Jaros Baum & Bolles Consulting Engineers
80 Pine Street
New York, NY 10013
TEL: 212.530.9300 FAX: 212.269.5894

Retail Interior Design & Planning
Elkus-Manfredi
300 A Street
Boston, MA 02210
TEL: 617.426.1300

No.	Description	Date
2	D.O.B AMENDMENT #2	10/15/2016
1	D.O.B BUILDING PERMIT FILING	12/10/2014

Key Plan

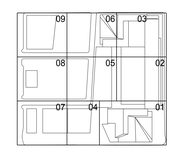

Issue Date 12/10/2014
Project No. N11328.00
Drawn By
Sheet Number

HYE-TA-S2-5083
Drawing Title

LEVELS 62-TOP - NORTH-SOUTH BRACING SECTION

Drawing Number
S2-5083
K-Scan Drawing Number
S-513.01

© 2013 KOHN PEDERSEN FOX ASSOCIATES PC. All rights reserved.

DEPT OF BLDGS 421385255 Job Number
E5906520565 Scan Code

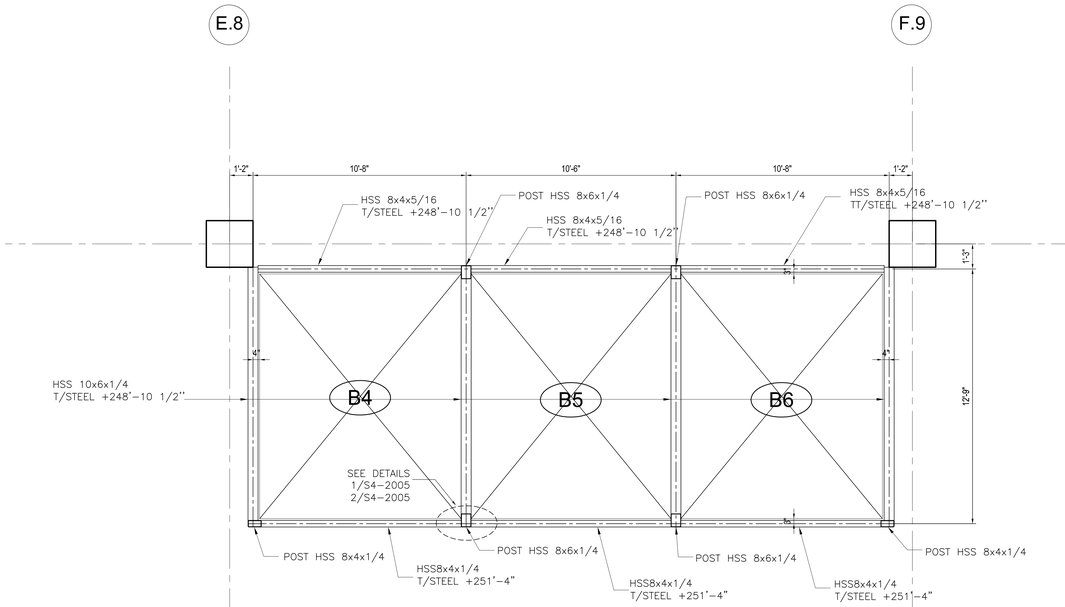

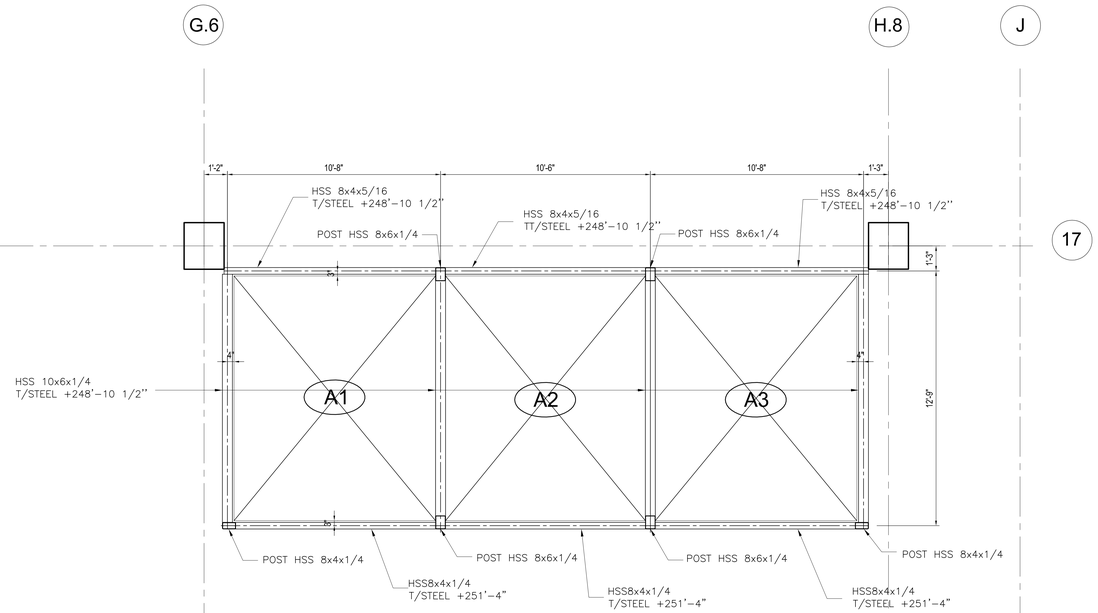

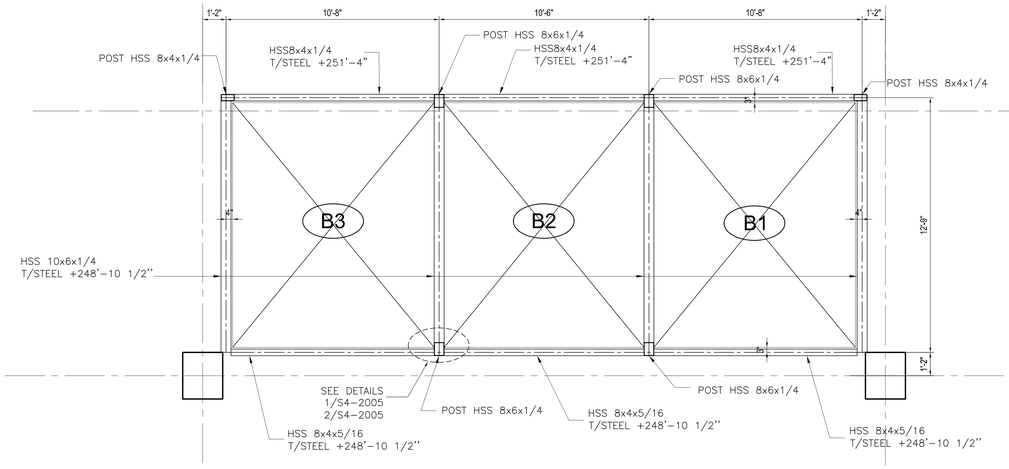

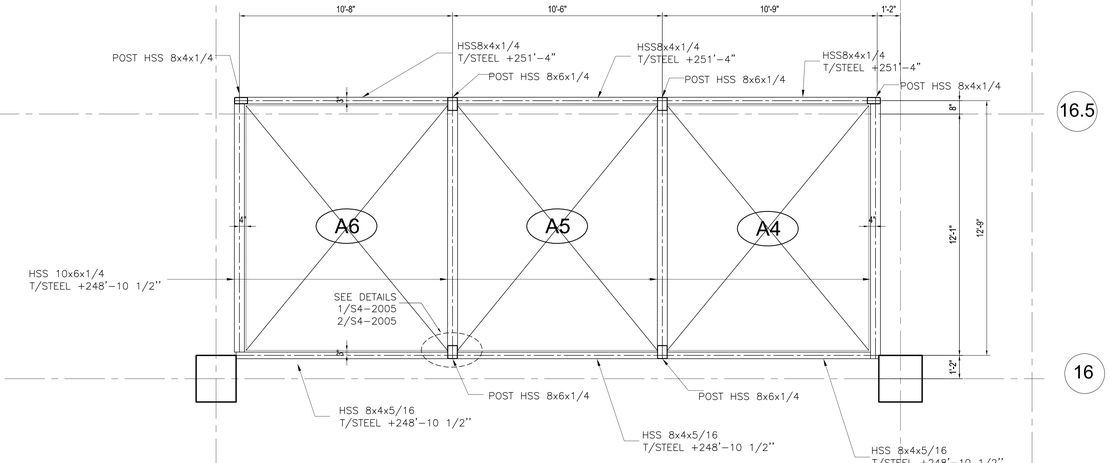

1 ELEVATOR INTERMEDIATE RAIL SUPPORT PLAN - LEVEL 12 TO LEVEL 13

SCALE: 3/8" = 1'-0"

NOTE:
ALL BEAMS ARE LSV UNLESS OTHERWISE NOTED

HUDSON YARDS - RETAIL PODIUM AND TOWER A

500 WEST 33RD STREET
New York, NY

Client
Related Companies
60 Columbus Circle
New York, NY 10023
TEL: 212.801.1000 FAX: 212.801.1048

Oxford Properties Group
320 Park Avenue, 17th Floor
New York, NY 10022
TEL: 212.986.7514 FAX: 212.986.7510

Architect
Kohn Pedersen Fox Associates
11 West 42nd Street
New York, New York 10036
TEL: 212.977.6500 FAX: 212.956.2526

Structural Engineer
Thornton Tomasetti, Inc.
51 Madison Avenue
New York, New York 10010
TEL: 917.661.7800 FAX: 718.661.7801

Mechanical, Electrical, Plumbing, Fire Protection
Jaros Baum & Bolles Consulting Engineers
80 Pine Street
New York, NY 10013
TEL: 212.530.9300 FAX: 212.269.5894

Retail Interior Design & Planning
Elkus-Manfredi
300 A Street
Boston, MA 02210
TEL: 617.426.1300

No.	Description	Date
1	D.O.B. AMENDMENT #2	10/15/2016

Key Plan

Issue Date: 10/15/2016
Project No. N11328.00
Drawn By: Author
Sheet Number

Damian Titus
Buildings
APPROVED
Under Directive 2 of 1975
AMENDED APPLICATION
Date: 05/01/2017
NYC Development Hub

Drawing Title
TOWER A ELEVATOR INTERMEDIATE SUPPORT PART PLANS XVII

Drawing Number
S3-6117
Work Drawing Number
S-514.00 SHEET 294 OF 443

© COPYRIGHT KOHN PEDERSEN FOX ASSOCIATES PC. All rights reserved.

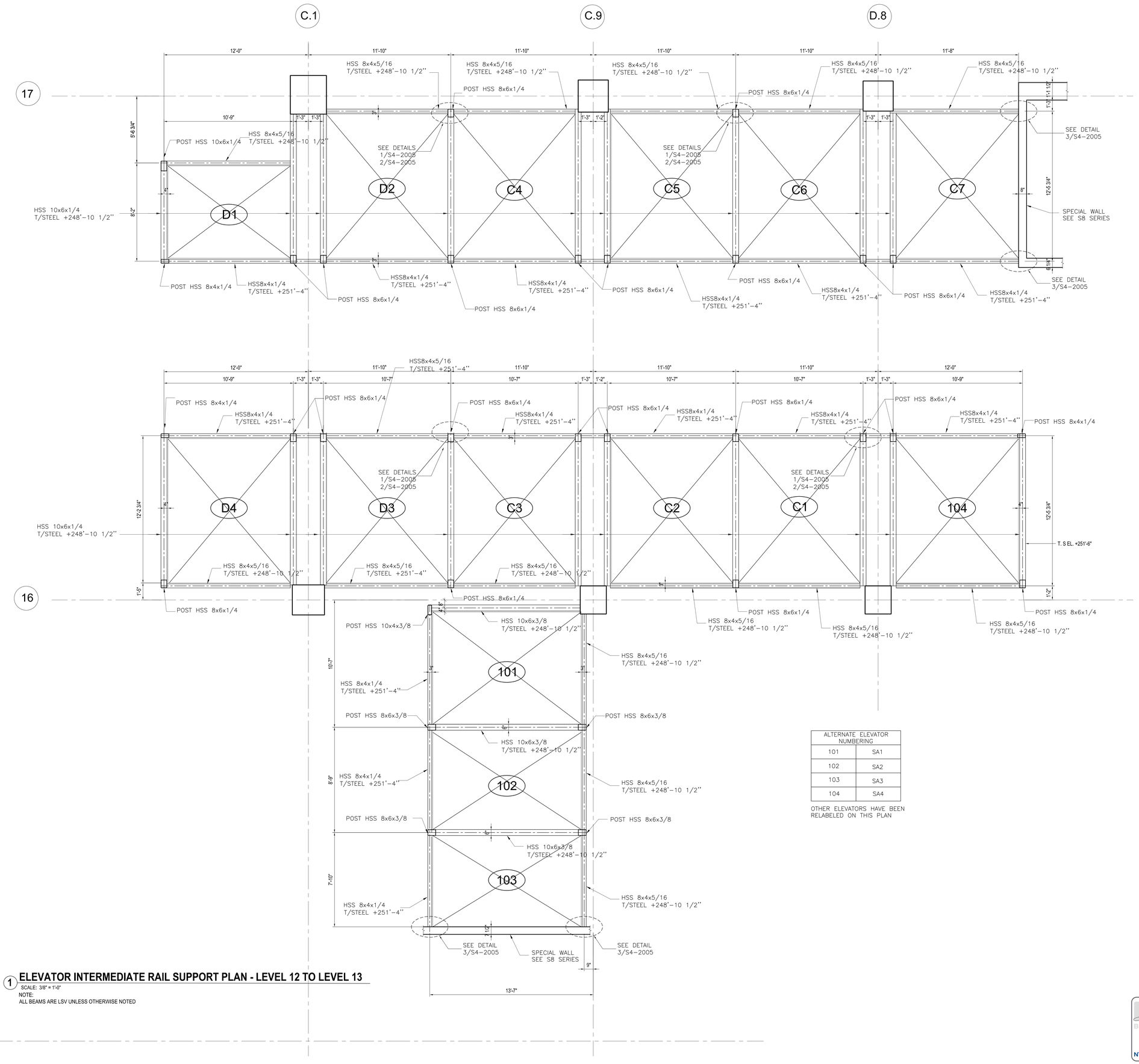

ALTERNATE ELEVATOR NUMBERING	
101	SA1
102	SA2
103	SA3
104	SA4

OTHER ELEVATORS HAVE BEEN RELABELED ON THIS PLAN

1 ELEVATOR INTERMEDIATE RAIL SUPPORT PLAN - LEVEL 12 TO LEVEL 13

SCALE: 3/8" = 1'-0"

NOTE:
ALL BEAMS ARE LSV UNLESS OTHERWISE NOTED

HUDSON YARDS - RETAIL PODIUM AND TOWER A

500 WEST 33RD STREET
New York, NY

Client
Related Companies
60 Columbus Circle
New York, NY 10023
TEL: 212.801.1000 FAX: 212.801.1048

Oxford Properties Group
320 Park Avenue, 17th Floor
New York, NY 10022
TEL: 212.986.7514 FAX: 212.986.7510

Architect
Kohn Pedersen Fox Associates
11 West 42nd Street
New York, New York 10036
TEL: 212.977.6500 FAX: 212.956.2526

Structural Engineer
Thornton Tomasetti, Inc.
51 Madison Avenue
New York, New York 10010
TEL: 917.661.7800 FAX: 718.661.7801

Mechanical, Electrical, Plumbing, Fire Protection
Jaros Baum & Bolles Consulting Engineers
80 Pine Street
New York, NY 10013
TEL: 212.530.9300 FAX: 212.269.5894

Retail Interior Design & Planning
Elkus-Manfredi
300 A Street
Boston, MA 02210
TEL: 617.426.1300

No.	Description	Date
1	D.O.B. AMENDMENT #2	10/15/2016

Key Plan

Issue Date: 10/15/2016
Project No. N11328.00
Drawn By Author
Sheet Number

Damian Titus
Buildings
APPROVED
Under Directive 2 of 1975
AMENDED APPLICATION
Date: 05/03/2017
NYC Development Hub

TOWER A ELEVATOR INTERMEDIATE SUPPORT PART PLANS XVIII

Drawing Number
S3-6118
B-Scan Drawing Number
S-515.00

© 2015 KOHN PEDERSEN FOX ASSOCIATES PC. All rights reserved.

DEPT OF BLDGS 421185253 Job Number
B00568805B Scan Code

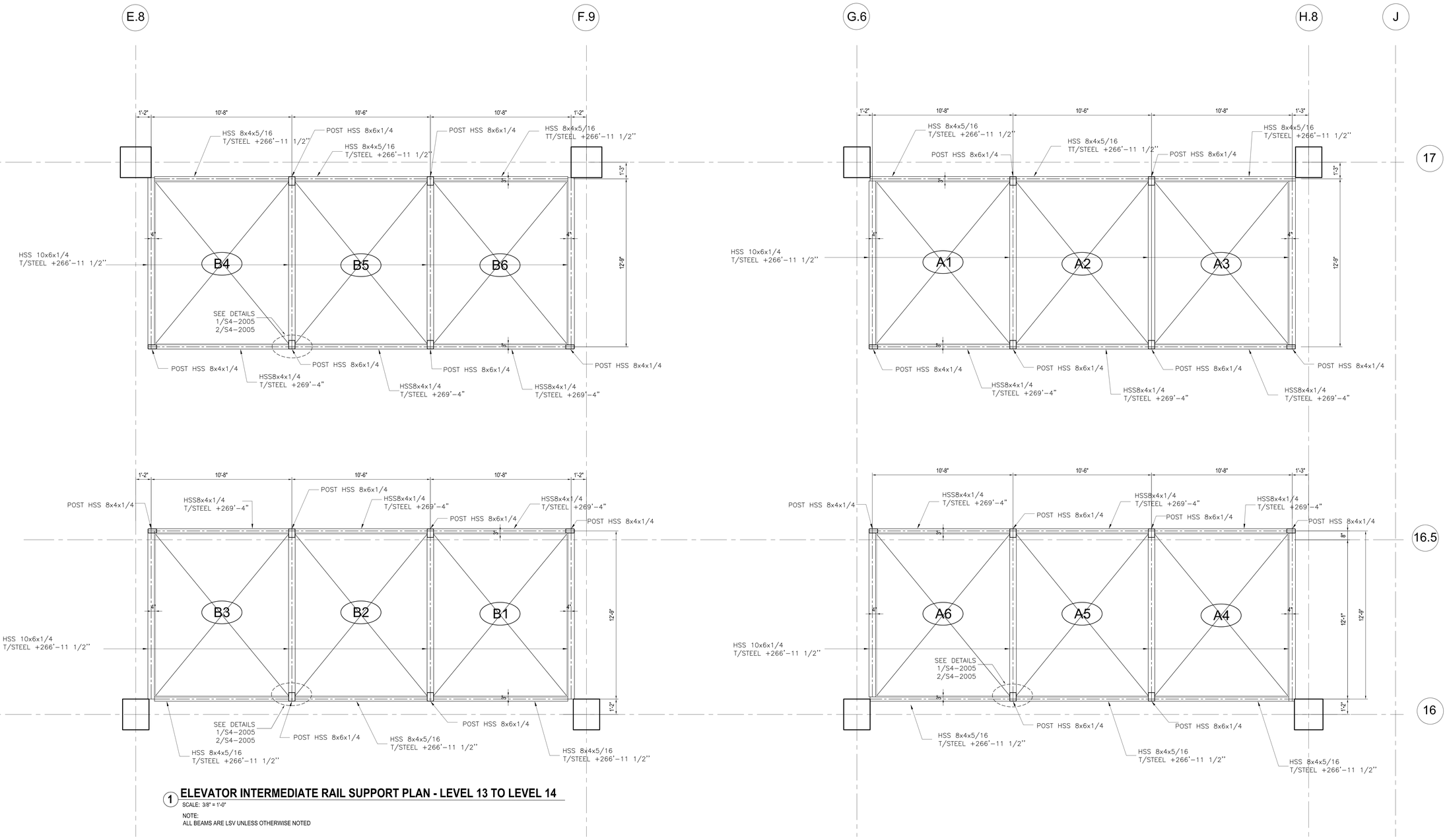

1 ELEVATOR INTERMEDIATE RAIL SUPPORT PLAN - LEVEL 13 TO LEVEL 14

SCALE: 3/8" = 1'-0"

NOTE:
ALL BEAMS ARE LSV UNLESS OTHERWISE NOTED

HUDSON YARDS - RETAIL PODIUM AND TOWER A

500 WEST 33RD STREET
New York, NY

Client
Related Companies
60 Columbus Circle
New York, NY 10023
TEL: 212.801.1000 FAX: 212.801.1048

Oxford Properties Group
320 Park Avenue, 17th Floor
New York, NY 10022
TEL: 212.986.7514 FAX: 212.986.7510

Architect
Kohn Pedersen Fox Associates
11 West 42nd Street
New York, New York 10036
TEL: 212.977.6500 FAX: 212.956.2526

Structural Engineer
Thornton Tomasetti, Inc.
51 Madison Avenue
New York, New York 10010
TEL: 917.661.7800 FAX: 718.661.7801

Mechanical, Electrical, Plumbing, Fire Protection
Jaros Baum & Bolles Consulting Engineers
80 Pine Street
New York, NY 10013
TEL: 212.530.9300 FAX: 212.269.5894

Retail Interior Design & Planning
Elkus-Manfredi
300 A Street
Boston, MA 02210
TEL: 617.426.1300

No.	Description	Date
1	D.O.B. AMENDMENT #2	10/15/2016

Key Plan

Issue Date: 10/15/2016
Project No. N11328.00
Drawn By: Author
Sheet Number

Damian Titus
Buildings
APPROVED
Under Directive 2 of 1975
AMENDED APPLICATION
Date: 05/03/2017
NYC Development Hub

Drawing Title
TOWER A ELEVATOR INTERMEDIATE SUPPORT PART PLANS XIX

Drawing Number
S3-6119
If Scan Drawing Number
S-516.00

© 2016 KOHN PEDERSEN FOX ASSOCIATES P.C. All rights reserved

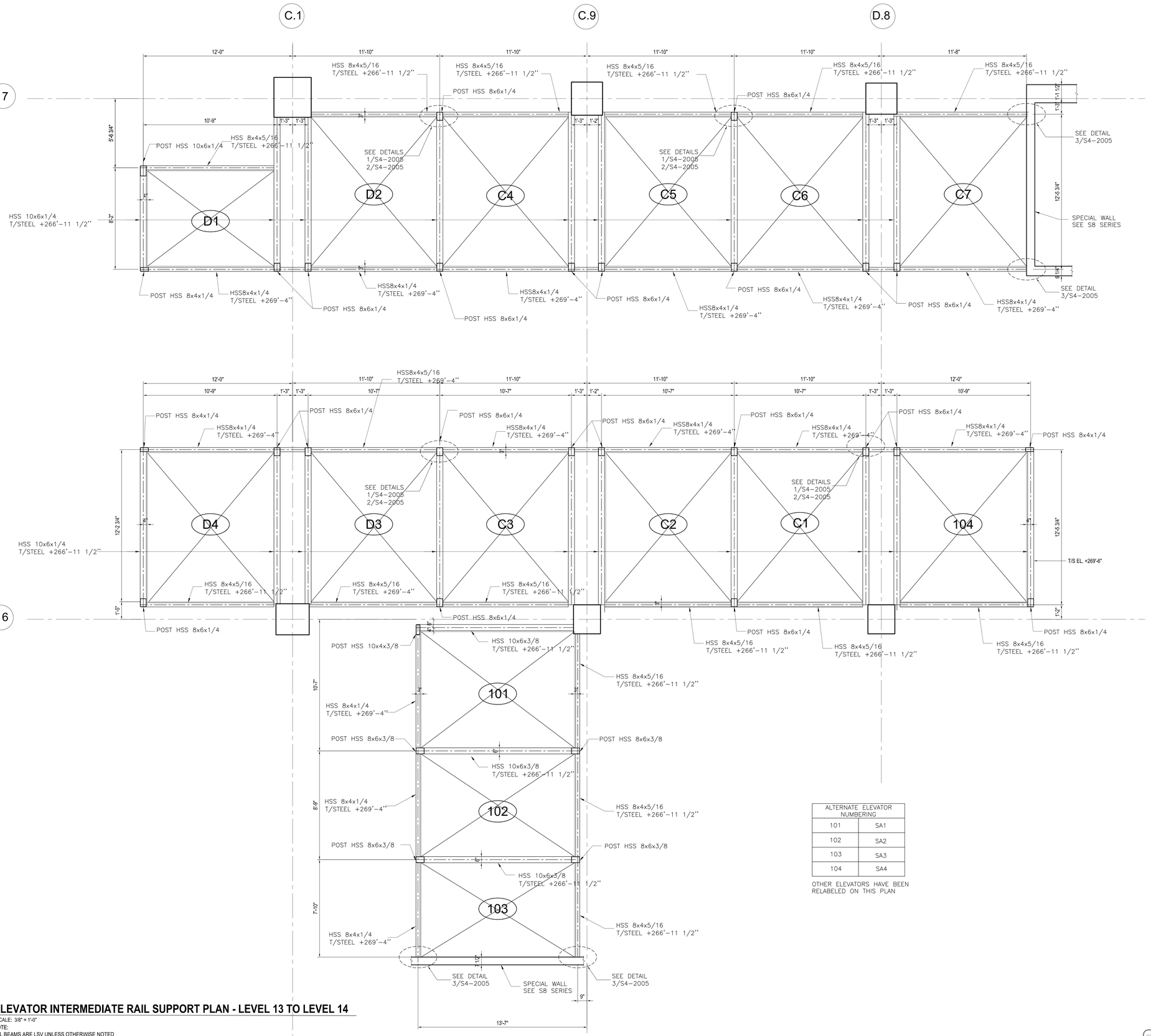

ALTERNATE ELEVATOR NUMBERING	
101	SA1
102	SA2
103	SA3
104	SA4

OTHER ELEVATORS HAVE BEEN RELABELED ON THIS PLAN

1 ELEVATOR INTERMEDIATE RAIL SUPPORT PLAN - LEVEL 13 TO LEVEL 14

SCALE: 3/8" = 1'-0"

NOTE:
ALL BEAMS ARE LSV UNLESS OTHERWISE NOTED

Damian Titus
Buildings
APPROVED
Under Directive 2 of 1975
AMENDED APPLICATION
Date: 05/03/2017
NYC Development Hub

HUDSON YARDS - RETAIL PODIUM AND TOWER A

500 WEST 33RD STREET
New York, NY

Client
Related Companies
60 Columbus Circle
New York, NY 10023
TEL: 212.801.1000 FAX: 212.801.1048

Oxford Properties Group
320 Park Avenue, 17th Floor
New York, NY 10022
TEL: 212.986.7514 FAX: 212.986.7510

Architect
Kohn Pedersen Fox Associates
11 West 42nd Street
New York, New York 10036
TEL: 212.977.6500 FAX: 212.956.2526

Structural Engineer
Thornton Tomasetti, Inc.
51 Madison Avenue
New York, New York 10010
TEL: 917.661.7800 FAX: 718.661.7801

Mechanical, Electrical, Plumbing, Fire Protection
Jaros Baum & Bolles Consulting Engineers
80 Pine Street
New York, NY 10013
TEL: 212.530.9300 FAX: 212.269.5894

Retail Interior Design & Planning
Elkus-Manfredi
300 A Street
Boston, MA 02210
TEL: 617.426.1300

No.	Description	Date
1	D.O.B. AMENDMENT #2	10/15/2016

Key Plan

Issue Date: 10/15/2016
Project No. N11328.00
Drawn By: Author
Sheet Number

Drawing Title
TOWER A ELEVATOR INTERMEDIATE SUPPORT PART PLANS XX

Drawing Number
S3-6120
B-Scan Drawing Number
S-517.00

© 2013 KOHN PEDERSEN FOX ASSOCIATES PC. All rights reserved.

DEPT OF BLDGS 421185253 Job Number
E5545266478 Scan Code

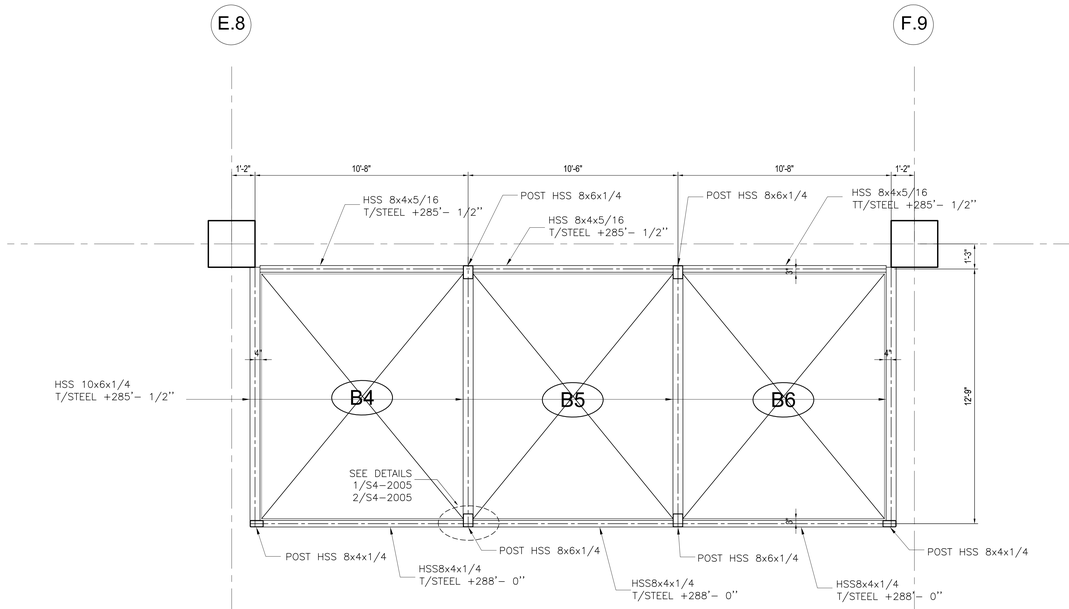

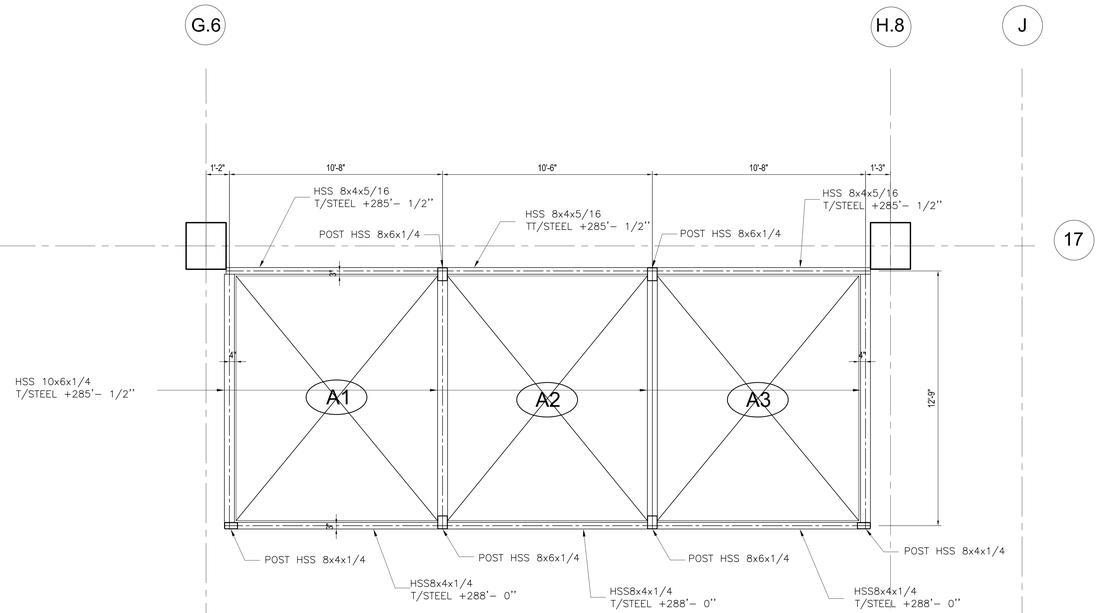

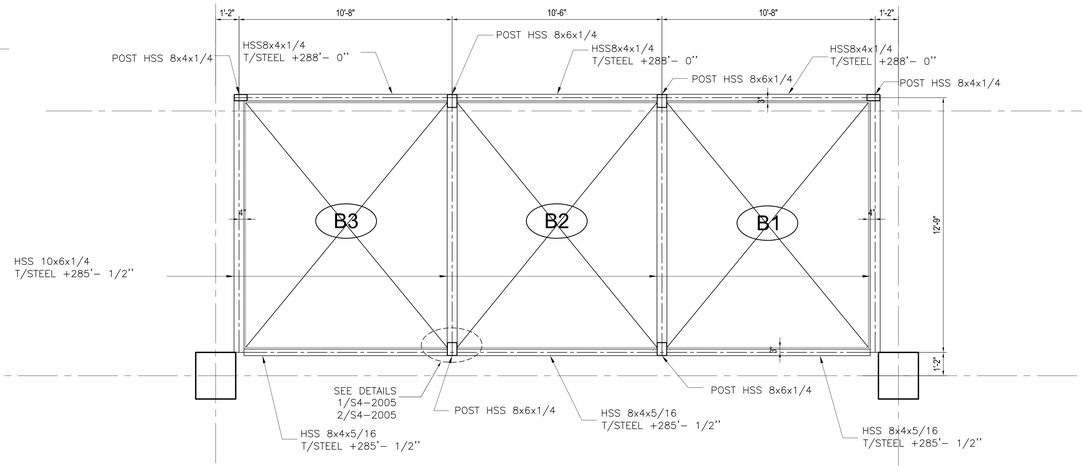

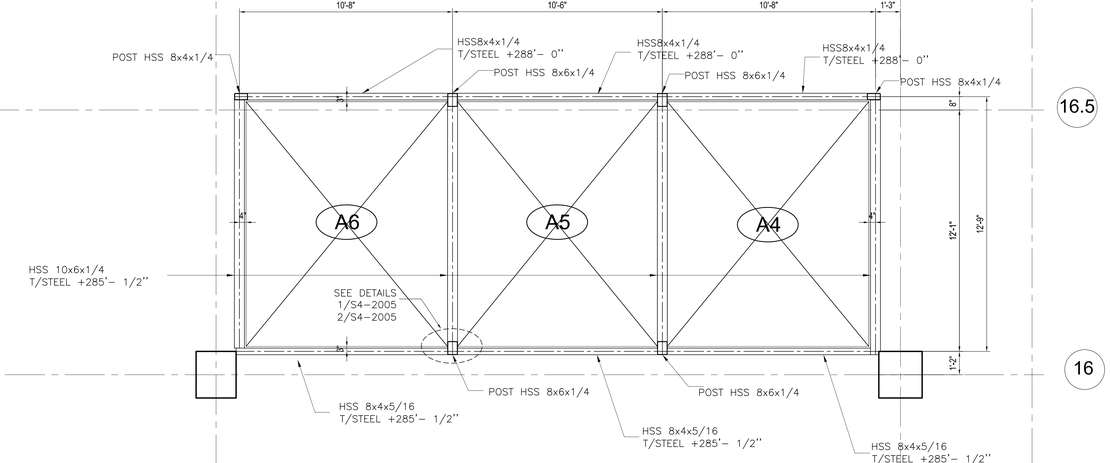

1 ELEVATOR INTERMEDIATE RAIL SUPPORT PLAN - LEVEL 14 TO LEVEL 15

SCALE: 3/8" = 1'-0"

NOTE:
ALL BEAMS ARE LSV UNLESS OTHERWISE NOTED

HUDSON YARDS - RETAIL PODIUM AND TOWER A

500 WEST 33RD STREET
New York, NY

Client
Related Companies
60 Columbus Circle
New York, NY 10023
TEL: 212.801.1000 FAX: 212.801.1048

Oxford Properties Group
320 Park Avenue, 17th Floor
New York, NY 10022
TEL: 212.986.7514 FAX: 212.986.7510

Architect
Kohn Pedersen Fox Associates
11 West 42nd Street
New York, New York 10036
TEL: 212.977.6500 FAX: 212.956.2526

Structural Engineer
Thornton Tomasetti, Inc.
51 Madison Avenue
New York, New York 10010
TEL: 917.661.7800 FAX: 718.661.7801

Mechanical, Electrical, Plumbing, Fire Protection
Jaros Baum & Bolles Consulting Engineers
80 Pine Street
New York, NY 10013
TEL: 212.530.9300 FAX: 212.269.5894

Retail Interior Design & Planning
Elkus-Manfredi
300 A Street
Boston, MA 02210
TEL: 617.426.1300

No.	Description	Date
1	D.O.B. AMENDMENT #2	10/15/2016

Key Plan

Issue Date: 10/15/2016
Project No. N11328.00
Drawn By: Author
Sheet Number

Damian Titus
Buildings
APPROVED
Under Directive 2 of 1975
AMENDED APPLICATION
Date: 05/03/2017
NYC Development Hub

Drawing Title
TOWER A ELEVATOR INTERMEDIATE SUPPORT PART PLANS XXI

Drawing Number
S3-6121
If Scan Drawing Number
S-518.00

© 2015 KOHN PEDERSEN FOX ASSOCIATES P.C. All rights reserved.

DEPT OF BLDGS 421195255 Job Number
E3870955288 Scan Code

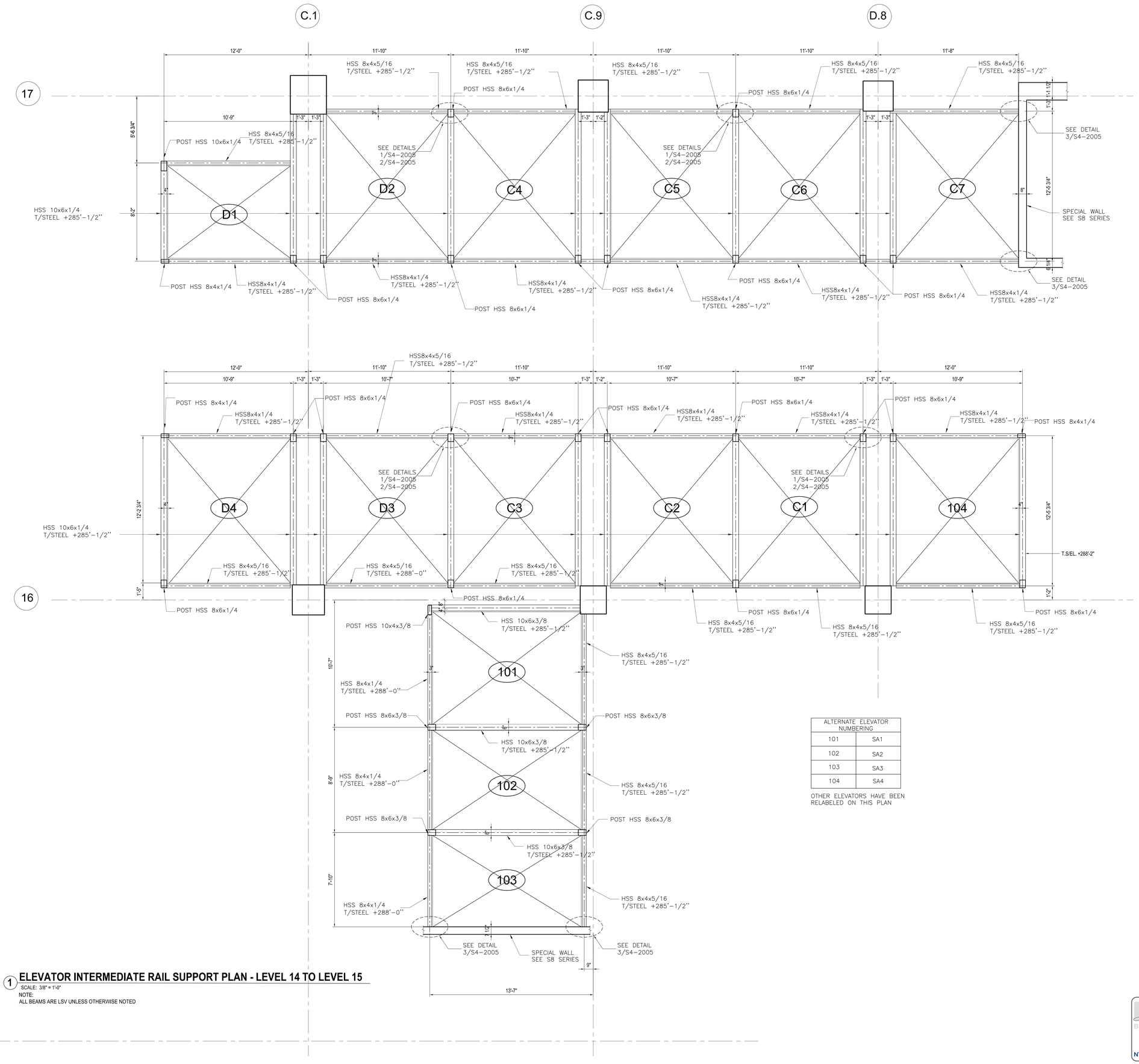

ALTERNATE ELEVATOR NUMBERING	
101	SA1
102	SA2
103	SA3
104	SA4

OTHER ELEVATORS HAVE BEEN RELABELED ON THIS PLAN

1 ELEVATOR INTERMEDIATE RAIL SUPPORT PLAN - LEVEL 14 TO LEVEL 15

SCALE: 3/8" = 1'-0"

NOTE:
ALL BEAMS ARE LSV UNLESS OTHERWISE NOTED

HUDSON YARDS - RETAIL PODIUM AND TOWER A

500 WEST 33RD STREET
New York, NY

Client
Related Companies
60 Columbus Circle
New York, NY 10023
TEL: 212.801.1000 FAX: 212.801.1048

Oxford Properties Group
320 Park Avenue, 17th Floor
New York, NY 10022
TEL: 212.986.7514 FAX: 212.986.7510

Architect
Kohn Pedersen Fox Associates
11 West 42nd Street
New York, New York 10036
TEL: 212.977.6500 FAX: 212.956.2526

Structural Engineer
Thornton Tomasetti, Inc.
51 Madison Avenue
New York, New York 10010
TEL: 917.661.7800 FAX: 718.661.7801

Mechanical, Electrical, Plumbing, Fire Protection
Jaros Baum & Bolles Consulting Engineers
80 Pine Street
New York, NY 10013
TEL: 212.530.9300 FAX: 212.269.5894

Retail Interior Design & Planning
Elkus-Manfredi
300 A Street
Boston, MA 02210
TEL: 617.426.1300

No.	Description	Date
1	D.O.B. AMENDMENT #2	10/15/2016

Key Plan

Issue Date: 10/15/2016
Project No. N11328.00
Drawn By Author
Sheet Number

Damian Titus
Buildings
APPROVED
Under Directive 1 of 1975
AMENDED APPLICATION
Date: 05/03/2017
NYC Development Hub

Drawing Title
TOWER A ELEVATOR INTERMEDIATE SUPPORT PART PLANS XXII

Drawing Number
S3-6122
BCAM Drawing Number
S-519.00 SHEET 299 OF 443

© 2013 KOHN PEDERSEN FOX ASSOCIATES PC. All rights reserved.

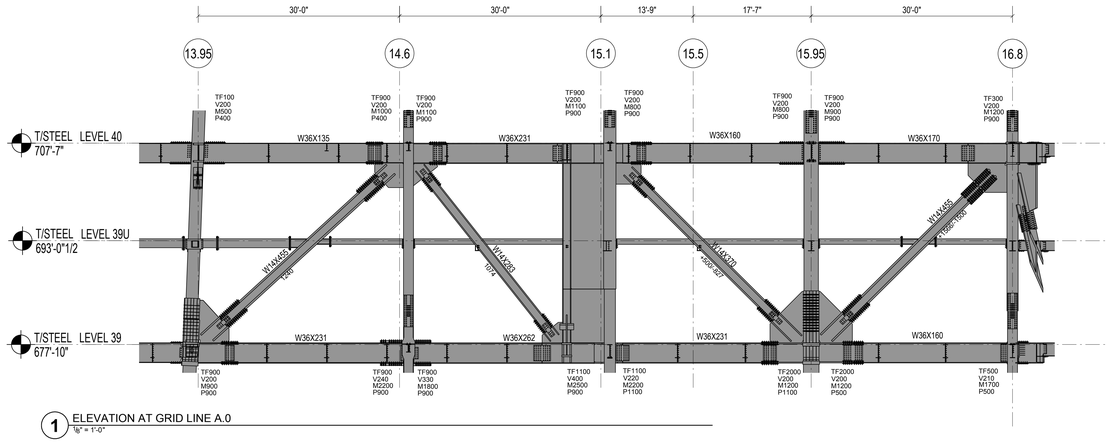

1 ELEVATION AT GRID LINE A.0
1/8" = 1'-0"

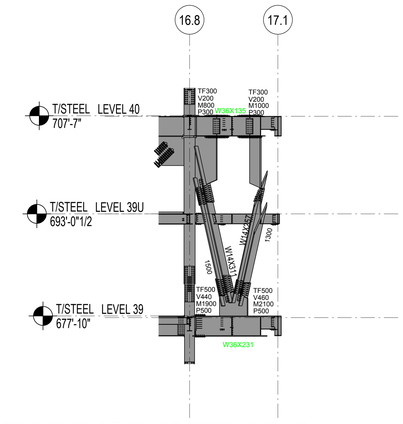

4 BRACING ELEVATION OF GRID LINE AB
1/8" = 1'-0"

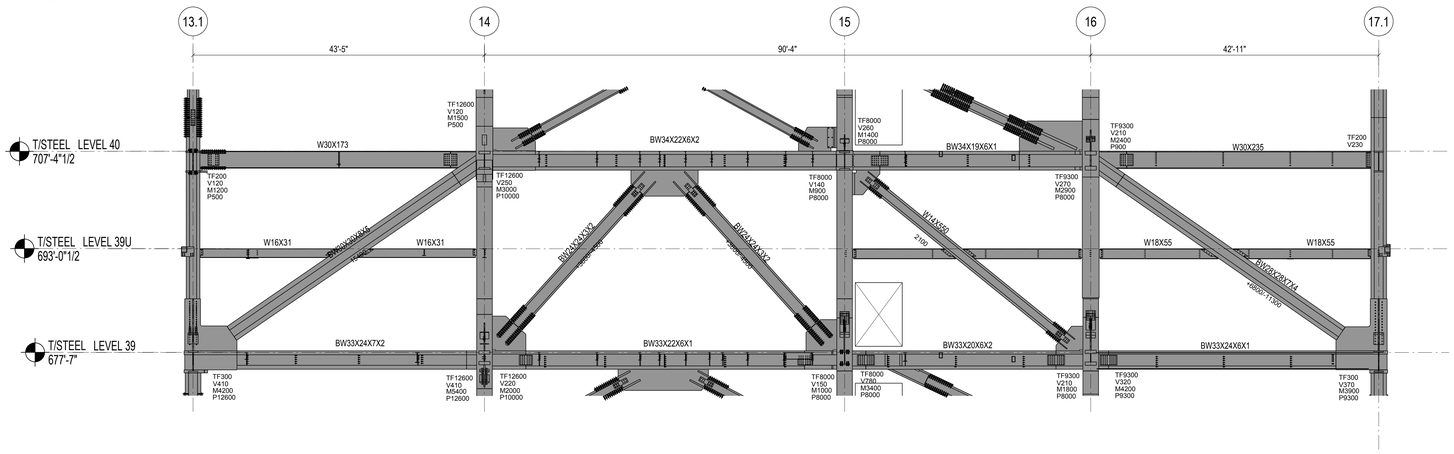

2 ELEVATION AT GRID LINE B.0
1/8" = 1'-0"

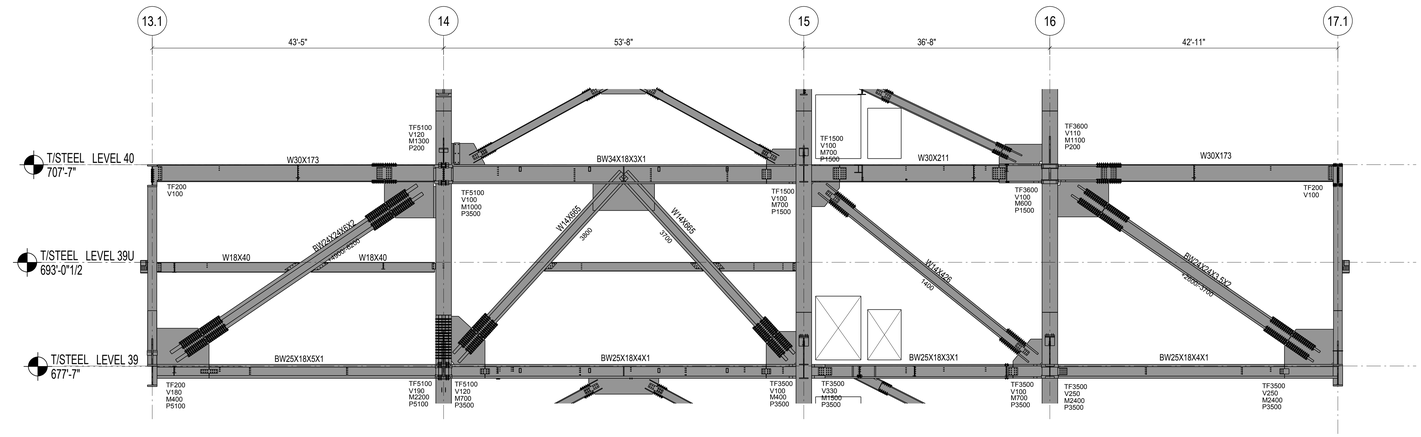

3 ELEVATION AT GRID LINE C.1
1/8" = 1'-0"

SHEET NOTES :

1. UNO, AT BRACED FRAME BEAMS INDICATED ON THIS ELEVATION, PROVIDE 2 STUDS/FT. FOR ALL REGIONS WHERE SLAB IS PRESENT ALONG THE BEAM LENGTH.

Damian Titus
Buildings
APPROVED
Under Directive 2 of 1975
AMENDED APPLICATION
Date: 05/01/2017
NYC Development Hub

HUDSON YARDS - RETAIL PODIUM AND TOWER A
500 WEST 33RD STREET
New York, NY

Client
Related Companies
60 Columbus Circle
New York, NY 10023
TEL: 212.801.1000 FAX: 212.801.1048

Oxford Properties Group
320 Park Avenue, 17th Floor
New York, NY 10022
TEL: 212.986.7514 FAX: 212.986.7510

Architect
Kohn Pedersen Fox Associates
11 West 42nd Street
New York, New York 10036
TEL: 212.977.6500 FAX: 212.956.2526

Structural Engineer
Thornton Tomasetti, Inc.
51 Madison Avenue
New York, New York 10010
TEL: 917.661.7800 FAX: 718.661.7801

Mechanical, Electrical, Plumbing, Fire Protection
Jaros Baum & Bolles Consulting Engineers
80 Pine Street
New York, NY 10013
TEL: 212.530.9300 FAX: 212.269.5894

Retail Interior Design & Planning
Elkus-Manfredi
300 A Street
Boston, MA 02210
TEL: 617.426.1300

No.	Description	Date
2	D.O.B AMENDMENT #2	10/15/2016
1	D.O.B BUILDING PERMIT FILING	12/10/2014

Key Plan

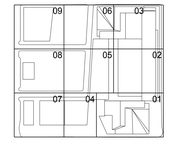

Issue Date 12/10/2014
Project No. N11328.00
Drawn By
Sheet Number

HYE-TA-S2-5090
Drawing Title

OUTRIGGER ELEVATIONS L39 AT GRID LINES A.0, B.0, C.1, & AB

Drawing Number
S2-5090
B-Scan Drawing Number
S-520.01

© 2013 KOHN PEDERSEN FOX ASSOCIATES PC. All rights reserved.

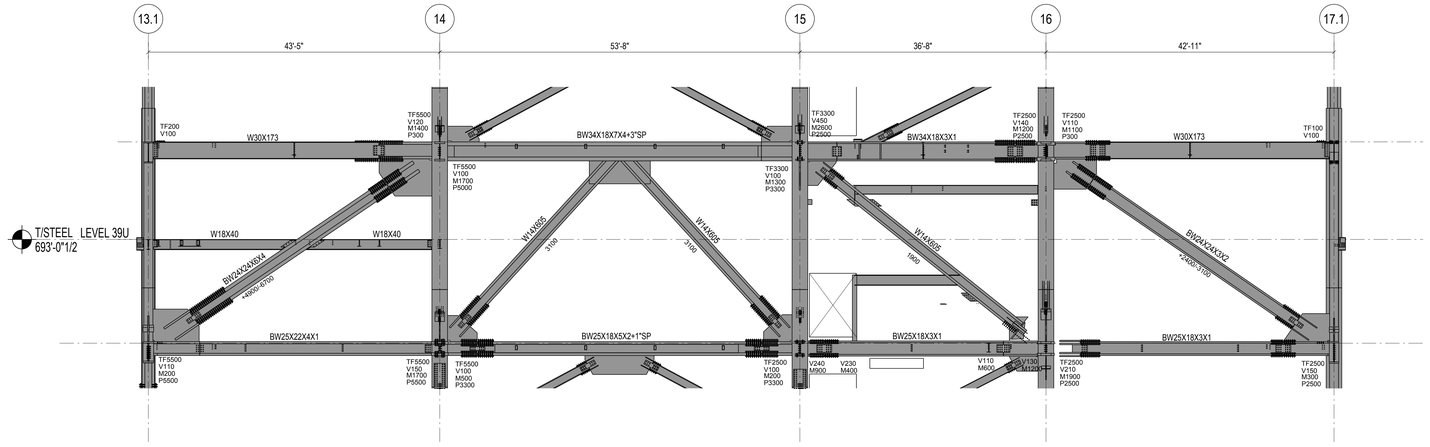

1 ELEVATION AT GRID LINE D.1
1/8" = 1'-0"

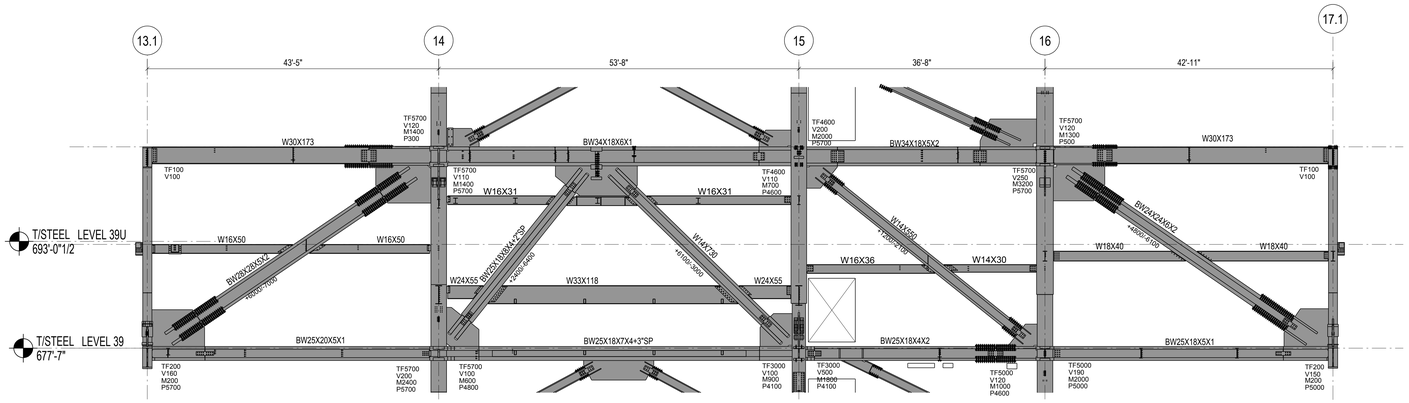

2 ELEVATION AT GRID LINE E.1
1/8" = 1'-0"

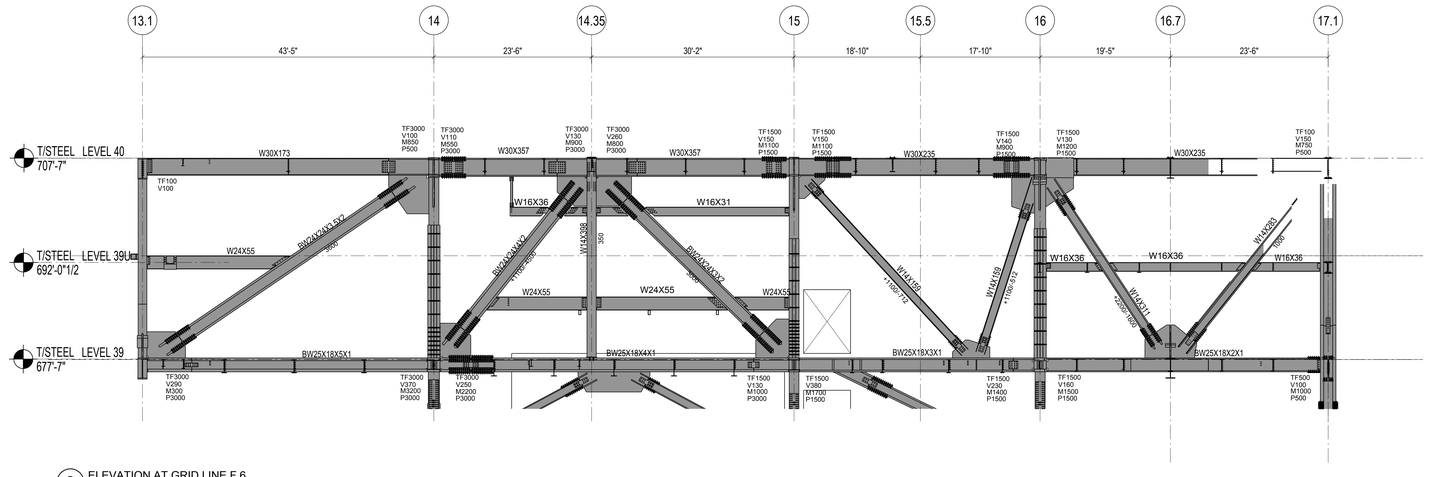

3 ELEVATION AT GRID LINE F.6
1/8" = 1'-0"

SHEET NOTES :

1. UNO, AT BRACED FRAME BEAMS INDICATED ON THIS ELEVATION, PROVIDE 2 STUDS/FT. FOR ALL REGIONS WHERE SLAB IS PRESENT ALONG THE BEAM LENGTH.

Damian Titus
Buildings
APPROVED
Under Directive 2 of 1975
AMENDED APPLICATION
Date: 05/03/2017
NYC Development Hub

HUDSON YARDS - RETAIL PODIUM AND TOWER A
500 WEST 33RD STREET
New York, NY

Client
Related Companies
60 Columbus Circle
New York, NY 10023
TEL: 212.801.1000 FAX: 212.801.1048

Oxford Properties Group
320 Park Avenue, 17th Floor
New York, NY 10022
TEL: 212.986.7514 FAX: 212.986.7510

Architect
Kohn Pedersen Fox Associates
11 West 42nd Street
New York, New York 10036
TEL: 212.977.6500 FAX: 212.956.2526

Structural Engineer
Thornton Tomasetti, Inc.
51 Madison Avenue
New York, New York 10010
TEL: 917.661.7800 FAX: 718.661.7801

Mechanical, Electrical, Plumbing, Fire Protection
Jaros Baum & Bolles Consulting Engineers
80 Pine Street
New York, NY 10013
TEL: 212.530.9300 FAX: 212.269.5894

Retail Interior Design & Planning
Elkus-Manfredi
300 A Street
Boston, MA 02210
TEL: 617.426.1300

No.	Description	Date
2	D.O.B AMENDMENT #2	10/15/2016
1	D.O.B BUILDING PERMIT FILING	12/10/2014

Key Plan

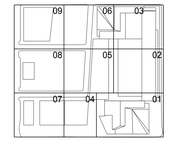

Issue Date 12/10/2014
Project No. N11328.00
Drawn By:
Sheet Number

STATE OF NEW YORK — DANIEL J. DOYLE — 085 — PROFESSIONAL ENGINEER

HYE-TA-S2-5091
Drawing Title

OUTRIGGER ELEVATIONS L39 AT GRID LINES D.1, E.1 & F.6

Drawing Number
S2-5091
X-Scan Drawing Number
S-521.01

SHEET 257 OF 443

© 2013 KOHN PEDERSEN FOX ASSOCIATES PC. All rights reserved.

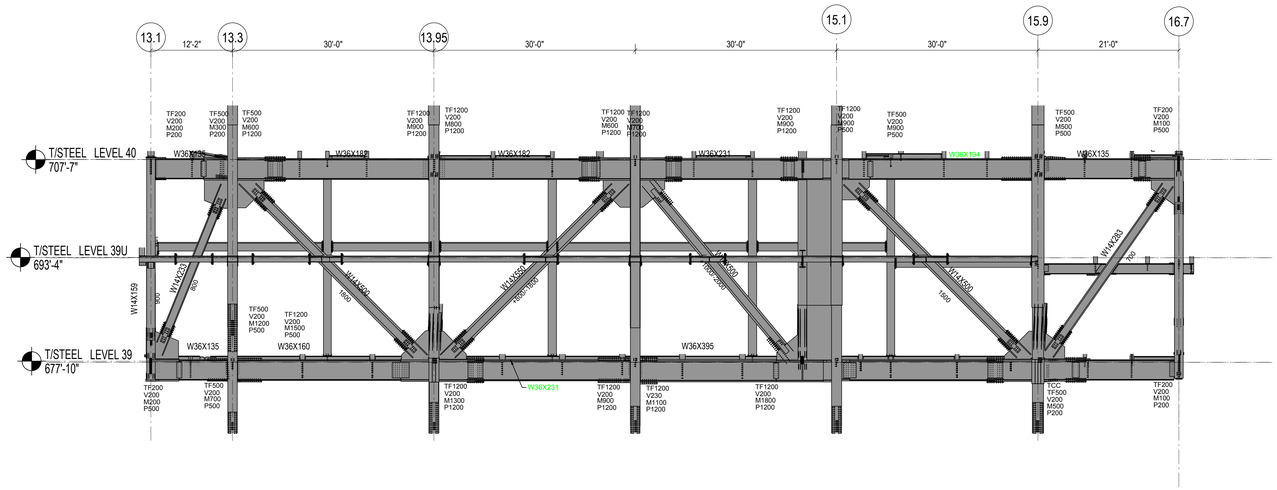

1 OUTRIGGER ELEVATION AT GRID LINE FS
1/8" = 1'-0"

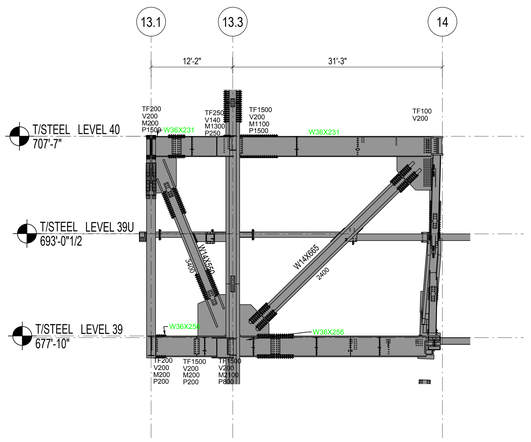

2 BRACING ELEVATION OF GRID LINE A.3
1/8" = 1'-0"

SHEET NOTES :

1. UNO, AT BRACED FRAME BEAMS INDICATED ON THIS ELEVATION, PROVIDE 2 STUDS/FT. FOR ALL REGIONS WHERE SLAB IS PRESENT ALONG THE BEAM LENGTH.

Damian Titus
APPROVED
Under Directive 2 of 1975
AMENDED APPLICATION
Date: 05/01/2017
NYC Development Hub

HUDSON YARDS - RETAIL PODIUM AND TOWER A
500 WEST 33RD STREET
New York, NY

Client
Related Companies
60 Columbus Circle
New York, NY 10023
TEL: 212.801.1000 FAX: 212.801.1048

Oxford Properties Group
320 Park Avenue, 17th Floor
New York, NY 10022
TEL: 212.986.7514 FAX: 212.986.7510

Architect
Kohn Pedersen Fox Associates
11 West 42nd Street
New York, New York 10036
TEL: 212.977.6500 FAX: 212.956.2526

Structural Engineer
Thornton Tomasetti, Inc.
51 Madison Avenue
New York, New York 10010
TEL: 917.661.7800 FAX: 718.661.7801

Mechanical, Electrical, Plumbing, Fire Protection
Jaros Baum & Bolles Consulting Engineers
80 Pine Street
New York, NY 10013
TEL: 212.530.9300 FAX: 212.269.5894

Retail Interior Design & Planning
Elkus-Manfredi
300 A Street
Boston, MA 02210
TEL: 617.426.1300

No.	Description	Date
2	D.O.B AMENDMENT #2	10/15/2016
1	D.O.B BUILDING PERMIT FILING	12/10/2014

Key Plan

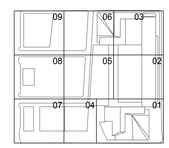

Issue Date 12/10/2014
Project No. N11328.00
Drawn By
Sheet Number

HYE-TA-S2-5092
Drawing Title

OUTRIGGER ELEVATIONS L39 AT GRID LINES FS & A.3

Drawing Number
S2-5092
N-Scan Drawing Number
S-522.01

© 2013 KOHN PEDERSEN FOX ASSOCIATES PC. All rights reserved.

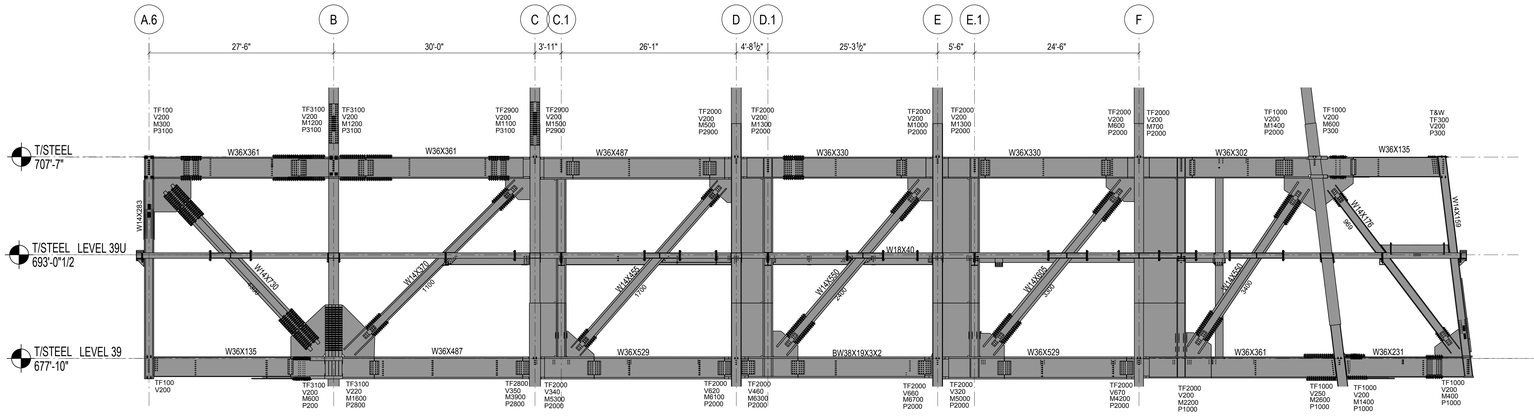

1 ELEVATION AT GRID LINE 13
1/8" = 1'-0"

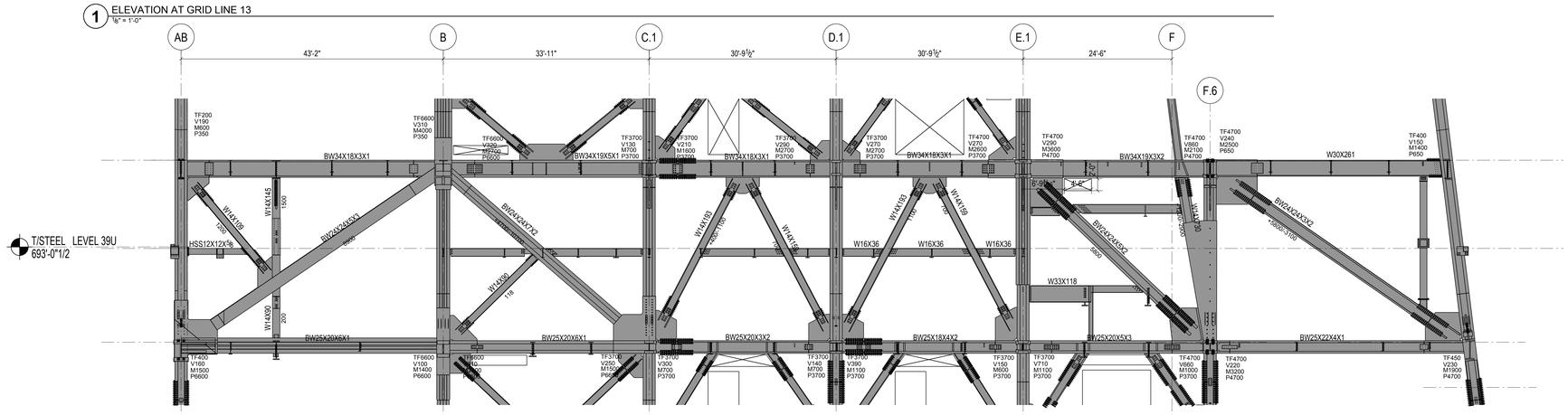

2 ELEVATION AT GRID LINE 14
1/8" = 1'-0"

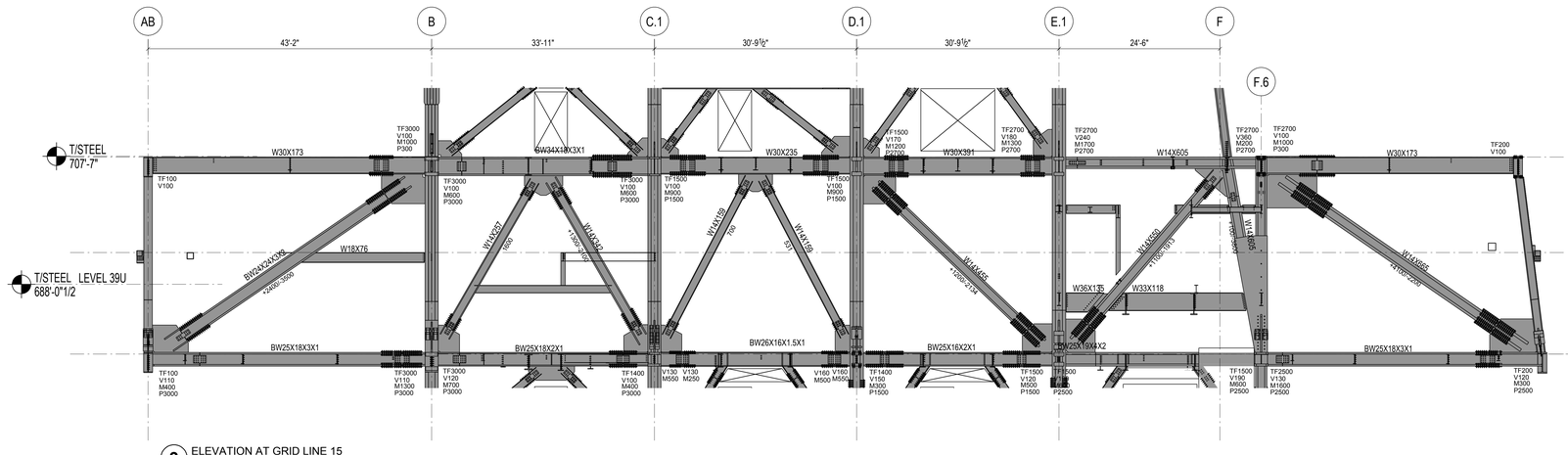

3 ELEVATION AT GRID LINE 15
1/8" = 1'-0"

SHEET NOTES :

1. UNO, AT BRACED FRAME BEAMS INDICATED ON THIS ELEVATION, PROVIDE 2 STUDS/1FT. FOR ALL REGIONS WHERE SLAB IS PRESENT ALONG THE BEAM LENGTH.

Damian Titus
Buildings
APPROVED
Under Directive 2 of 1975
AMENDED APPLICATION
Date: 05/03/2017
NYC Development Hub

HUDSON YARDS - RETAIL PODIUM AND TOWER A
500 WEST 33RD STREET
New York, NY

Client
Related Companies
60 Columbus Circle
New York, NY 10023
TEL: 212.801.1000 FAX: 212.801.1048

Oxford Properties Group
320 Park Avenue, 17th Floor
New York, NY 10022
TEL: 212.986.7514 FAX: 212.986.7510

Architect
Kohn Pedersen Fox Associates
11 West 42nd Street
New York, New York 10036
TEL: 212.977.6500 FAX: 212.956.2526

Structural Engineer
Thornton Tomasetti, Inc.
51 Madison Avenue
New York, New York 10010
TEL: 917.661.7800 FAX: 718.661.7801

Mechanical, Electrical, Plumbing, Fire Protection
Jaros Baum & Bolles Consulting Engineers
80 Pine Street
New York, NY 10013
TEL: 212.530.9300 FAX: 212.269.5894

Retail Interior Design & Planning
Elkus-Manfredi
300 A Street
Boston, MA 02210
TEL: 617.426.1300

No.	Description	Date
2	D.O.B AMENDMENT #2	10/15/2016
1	D.O.B BUILDING PERMIT FILING	12/10/2014

Key Plan

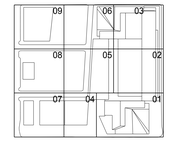

Issue Date 12/10/2014
Project No. N11328.00
Drawn By:
Sheet Number

STATE OF NEW YORK
DANIEL J. DOLAN
088 053
LICENSED PROFESSIONAL ENGINEER

HYE-TA-S2-5093
Drawing Title

OUTRIGGER ELEVATIONS L39 AT GRID LINES 13, 14, & 15

Drawing Number
S2-5093
As-Sun Drawing Number
S-523.01

© 2013 KOHN PEDERSEN FOX ASSOCIATES PC. All rights reserved.

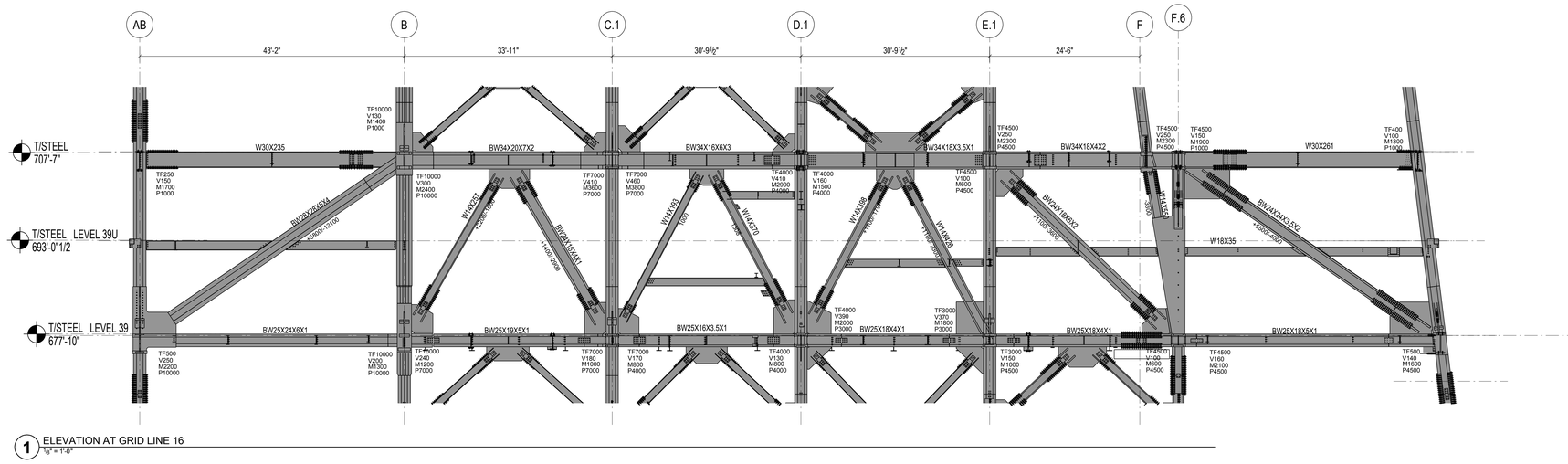

1 ELEVATION AT GRID LINE 16
1/8" = 1'-0"

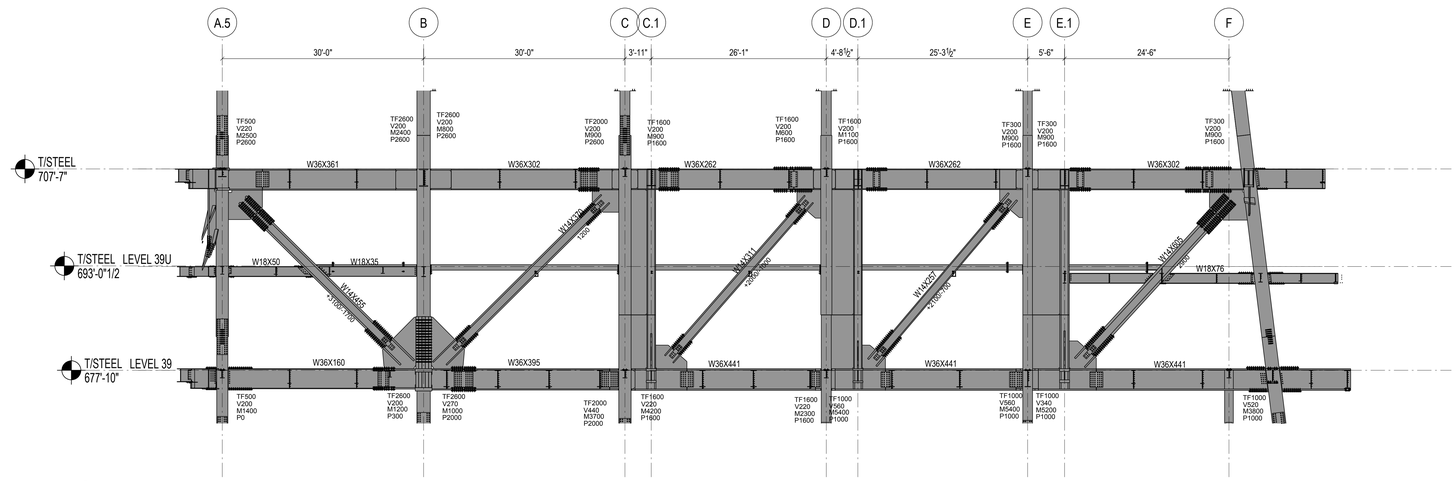

2 ELEVATION AT GRID LINE 17
1/8" = 1'-0"

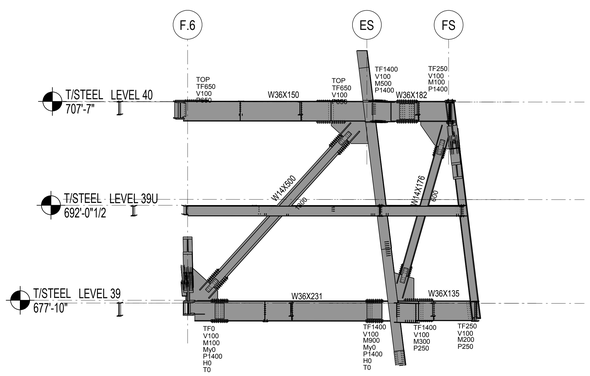

3 ELEVATION ON GRID LINE 16.5
1/8" = 1'-0"

SHEET NOTES :

1. UNO, AT BRACED FRAME BEAMS INDICATED ON THIS ELEVATION, PROVIDE 2 STUDS/FT. FOR ALL REGIONS WHERE SLAB IS PRESENT ALONG THE BEAM LENGTH.

Damian Titus
Buildings
APPROVED
Under Directive 2 of 1975
AS NOTED APPLICATIONS
Date: 05/03/2017
NYC Development Hub

HUDSON YARDS - RETAIL PODIUM AND TOWER A
500 WEST 33RD STREET
New York, NY

Client
Related Companies
60 Columbus Circle
New York, NY 10023
TEL: 212.801.1000 FAX: 212.801.1048

Oxford Properties Group
320 Park Avenue, 17th Floor
New York, NY 10022
TEL: 212.986.7514 FAX: 212.986.7510

Architect
Kohn Pedersen Fox Associates
11 West 42nd Street
New York, New York 10036
TEL: 212.977.6500 FAX: 212.956.2526

Structural Engineer
Thornton Tomasetti, Inc.
51 Madison Avenue
New York, New York 10010
TEL: 917.661.7800 FAX: 718.661.7801

Mechanical, Electrical, Plumbing, Fire Protection
Jaros Baum & Bolles Consulting Engineers
80 Pine Street
New York, NY 10013
TEL: 212.530.9300 FAX: 212.269.5894

Retail Interior Design & Planning
Elkus-Manfredi
300 A Street
Boston, MA 02210
TEL: 617.426.1300

No.	Description	Date
2	D.O.B AMENDMENT #2	10/15/2016
1	D.O.B BUILDING PERMIT FILING	12/10/2014

Key Plan

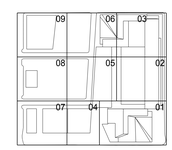

Issue Date 12/10/2014
Project No. N11328.00
Drawn By
Sheet Number

HYE-TA-S2-5094
Drawing Title

OUTRIGGER ELEVATIONS L39 AT GRID LINES 16, 17, & 16.5

Drawing Number
S2-5094
Kohn Drawing Number
S-524.01

© 2013 KOHN PEDERSEN FOX ASSOCIATES PC. All rights reserved.

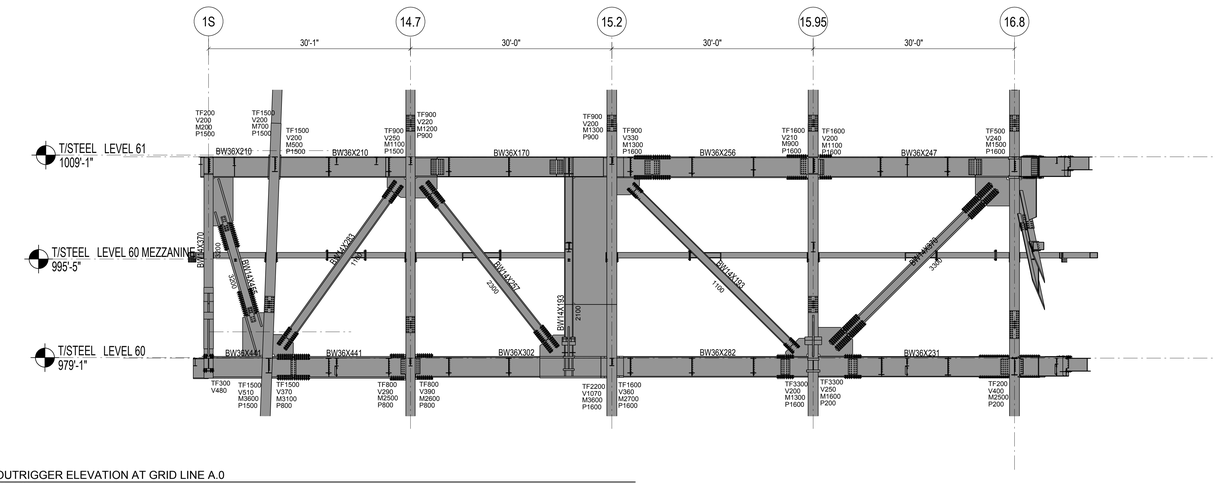

1 OUTRIGGER ELEVATION AT GRID LINE A.0
1/8" = 1'-0"

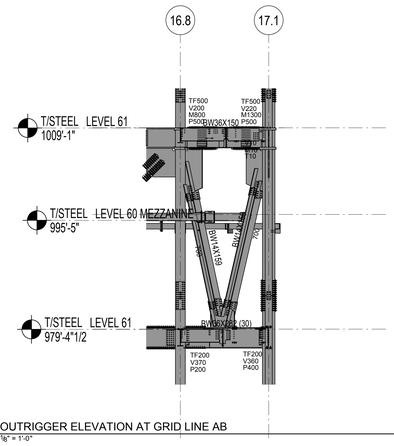

4 OUTRIGGER ELEVATION AT GRID LINE AB
1/8" = 1'-0"

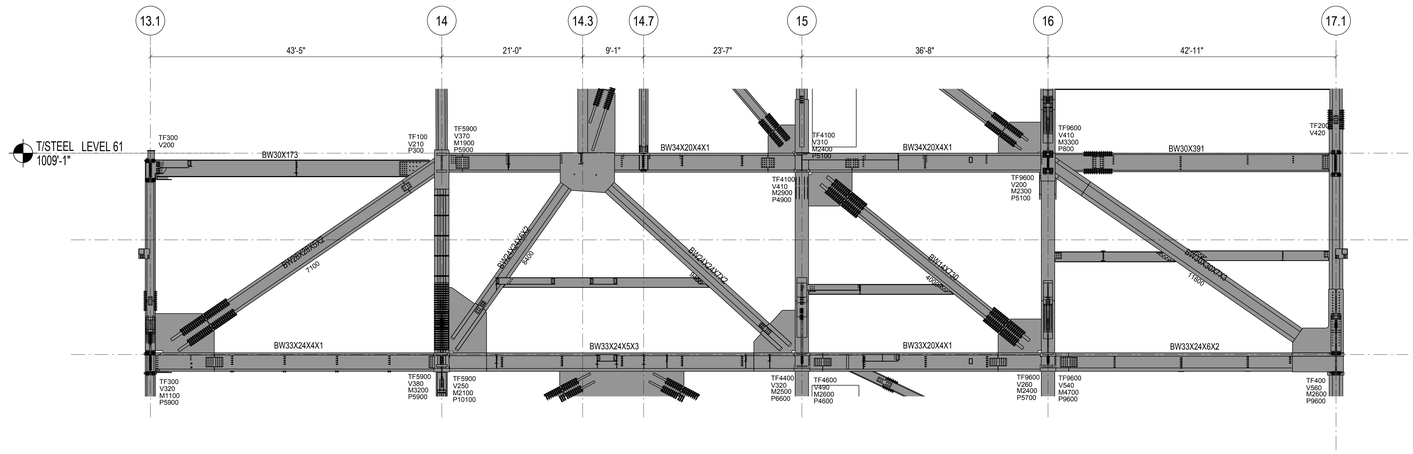

2 OUTRIGGER ELEVATION AT GRID LINE B.0
1/8" = 1'-0"

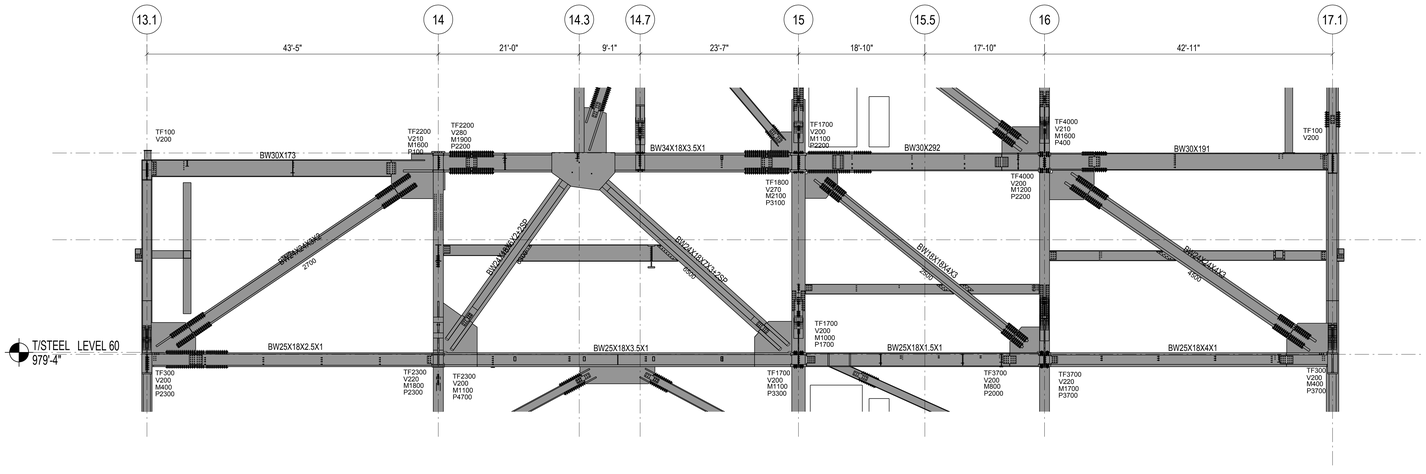

3 OUTRIGGER ELEVATION AT GRID LINE C.1
1/8" = 1'-0"

SHEET NOTES :

1. UNO, AT BRACED FRAME BEAMS INDICATED ON THIS ELEVATION, PROVIDE 2 STUDS/FT. FOR ALL REGIONS WHERE SLAB IS PRESENT ALONG THE BEAM LENGTH.

Damian Titus
Buildings
APPROVED
Under Directive 2 of 1975
MODIFICATION
Date: 05/03/2017
NYC Development Hub

HUDSON YARDS - RETAIL PODIUM AND TOWER A
500 WEST 33RD STREET
New York, NY

Client
Related Companies
60 Columbus Circle
New York, NY 10023
TEL: 212.801.1000 FAX: 212.801.1048

Oxford Properties Group
320 Park Avenue, 17th Floor
New York, NY 10022
TEL: 212.986.7514 FAX: 212.986.7510

Architect
Kohn Pedersen Fox Associates
11 West 42nd Street
New York, New York 10036
TEL: 212.977.6500 FAX: 212.956.2526

Structural Engineer
Thornton Tomasetti, Inc.
51 Madison Avenue
New York, New York 10010
TEL: 917.661.7800 FAX: 718.661.7801

Mechanical, Electrical, Plumbing, Fire Protection
Jaros Baum & Bolles Consulting Engineers
80 Pine Street
New York, NY 10013
TEL: 212.530.9300 FAX: 212.269.5894

Retail Interior Design & Planning
Elkus-Manfredi
300 A Street
Boston, MA 02210
TEL: 617.426.1300

No.	Description	Date
2	D.O.B AMENDMENT #2	10/15/2016
1	D.O.B BUILDING PERMIT FILING	12/10/2014

Key Plan

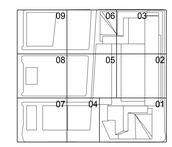

Issue Date 12/10/2014
Project No. N11328.00
Drawn By
Sheet Number

STATE OF NEW YORK
DANIEL J. DUNN
090 239
LICENSED PROFESSIONAL ENGINEER

HYE-TA-S2-5095
Drawing Title

OUTRIGGER ELEVATIONS L60 AT GRID LINES A.0, B.0, C.1, & AB

Drawing Number
S2-5095
S-Size Drawing Number
S-525.01

© 2013 KOHN PEDERSEN FOX ASSOCIATES PC. All rights reserved.

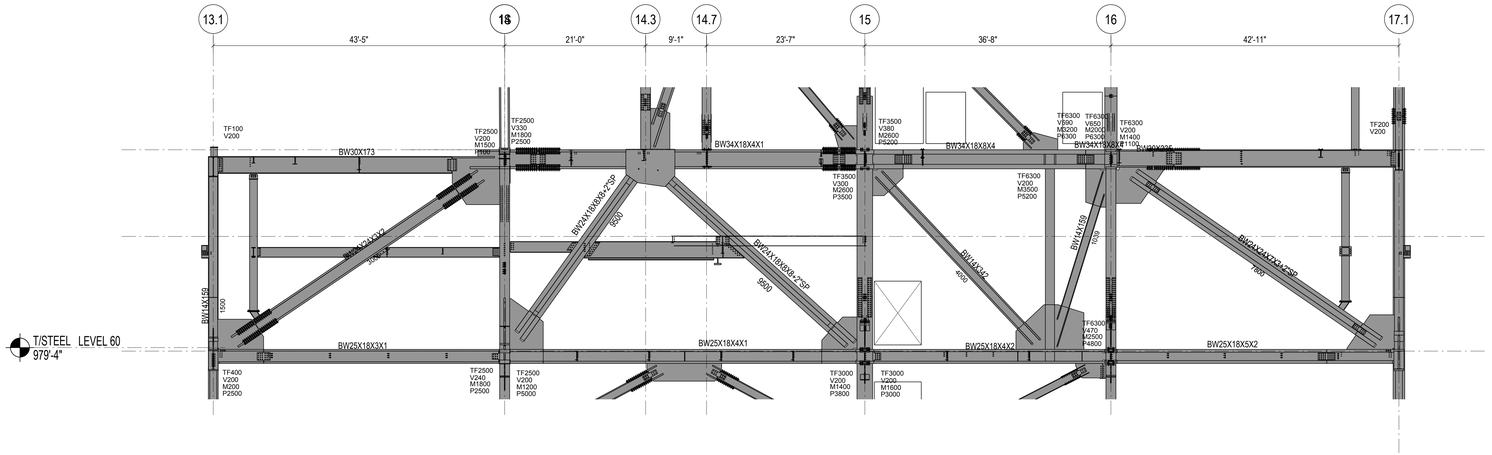

1 OUTRIGGER ELEVATION AT GRID LINE D.1
1/8" = 1'-0"

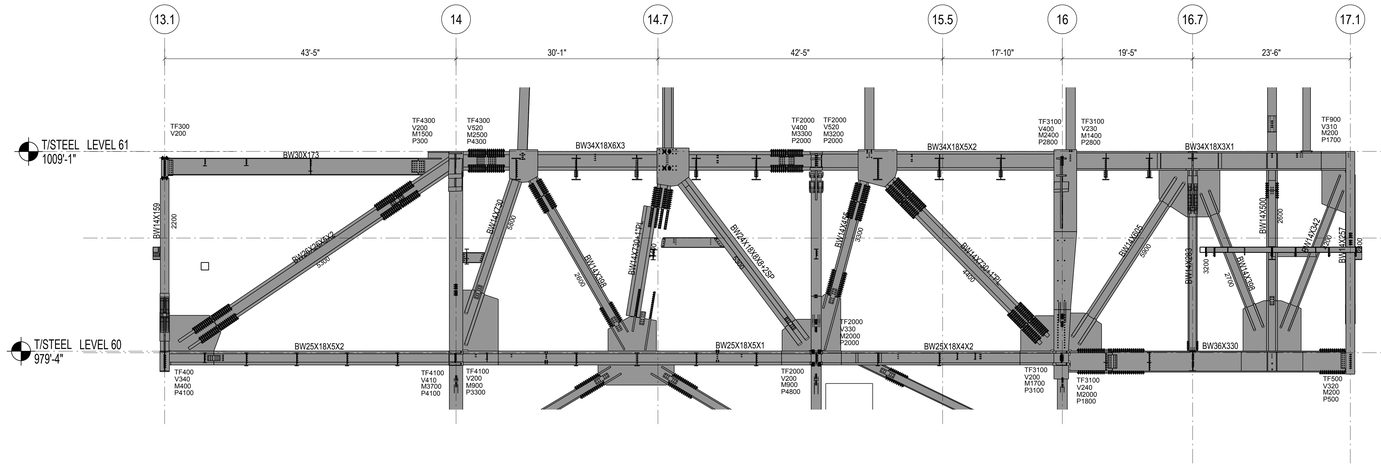

2 OUTRIGGER ELEVATION AT GRID LINE E.1
1/8" = 1'-0"

SHEET NOTES :

1. UNO, AT BRACED FRAME BEAMS INDICATED ON THIS ELEVATION, PROVIDE 2 STUDS/FT. FOR ALL REGIONS WHERE SLAB IS PRESENT ALONG THE BEAM LENGTH

HUDSON YARDS - RETAIL PODIUM AND TOWER A
500 WEST 33RD STREET
New York, NY

Client
Related Companies
60 Columbus Circle
New York, NY 10023
TEL: 212.801.1000 FAX: 212.801.1048

Oxford Properties Group
320 Park Avenue, 17th Floor
New York, NY 10022
TEL: 212.986.7514 FAX: 212.986.7510

Architect
Kohn Pedersen Fox Associates
11 West 42nd Street
New York, New York 10036
TEL: 212.977.6500 FAX: 212.956.2526

Structural Engineer
Thornton Tomasetti, Inc.
51 Madison Avenue
New York, New York 10010
TEL: 917.661.7800 FAX: 718.661.7801

Mechanical, Electrical, Plumbing, Fire Protection
Jaros Baum & Bolles Consulting Engineers
80 Pine Street
New York, NY 10013
TEL: 212.530.9300 FAX: 212.269.5894

Retail Interior Design & Planning
Elkus-Manfredi
300 A Street
Boston, MA 02210
TEL: 617.426.1300

No.	Description	Date
2	D.O.B AMENDMENT #2	10/15/2016
1	D.O.B BUILDING PERMIT FILING	12/10/2014

Key Plan

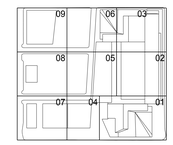

Issue Date 12/10/2014
Project No. N11328.00
Drawn By
Sheet Number

HYE-TA-S2-5096
Drawing Title

OUTRIGGER ELEVATIONS L60 AT GRID LINES D.1 & E.1

Drawing Number
S2-5096
Revision Drawing Number
S-526.01

Damian Titus
Buildings
APPROVED
Under Directive 2 of 1975
MEMO OF APPLICATION
Date: 05/03/2017
NYC Development Hub

© 2013 KOHN PEDERSEN FOX ASSOCIATES PC. All rights reserved.

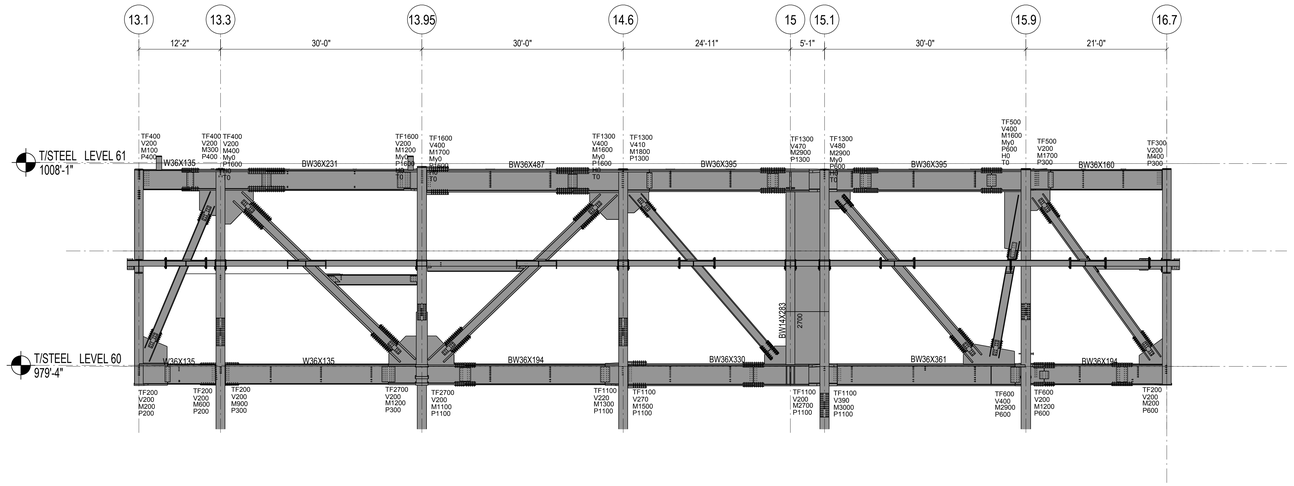

1 OUTRIGGER ELEVATION AT GRID LINE FS
1/8" = 1'-0"

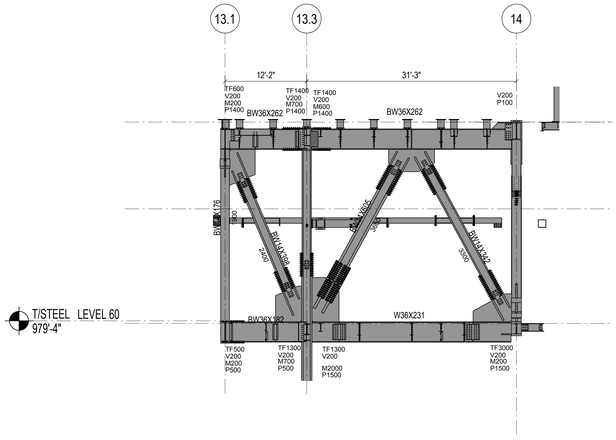

2 OUTRIGGER ELEVATION AT GRID LINE A.6
3/8" = 1'-0"

SHEET NOTES :

1. UNO, AT BRACED FRAME BEAMS INDICATED ON THIS ELEVATION, PROVIDE 2 STUDS/FT. FOR ALL REGIONS WHERE SLAB IS PRESENT ALONG THE BEAM LENGTH.

Damian Titus
Buildings
APPROVED
Under Directive 2 of 1975
AS NOTED PER PLANS
Date: 05/03/2017
NYC Development Hub

HUDSON YARDS - RETAIL PODIUM AND TOWER A
500 WEST 33RD STREET
New York, NY

Client
Related Companies
60 Columbus Circle
New York, NY 10023
TEL: 212.801.1000 FAX: 212.801.1048

Oxford Properties Group
320 Park Avenue, 17th Floor
New York, NY 10022
TEL: 212.986.7514 FAX: 212.986.7510

Architect
Kohn Pedersen Fox Associates
11 West 42nd Street
New York, New York 10036
TEL: 212.977.6500 FAX: 212.956.2526

Structural Engineer
Thornton Tomasetti, Inc.
51 Madison Avenue
New York, New York 10010
TEL: 917.661.7800 FAX: 718.661.7801

Mechanical, Electrical, Plumbing, Fire Protection
Jaros Baum & Bolles Consulting Engineers
80 Pine Street
New York, NY 10013
TEL: 212.530.9300 FAX: 212.269.5894

Retail Interior Design & Planning
Elkus-Manfredi
300 A Street
Boston, MA 02210
TEL: 617.426.1300

No.	Description	Date
2	D.O.B AMENDMENT #2	10/15/2016
1	D.O.B BUILDING PERMIT FILING	12/10/2014

Key Plan

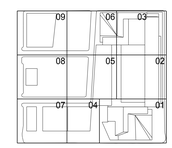

Issue Date 12/10/2014
Project No. N11328.00
Drawn By
Sheet Number

STATE OF NEW YORK — MICHAEL J. DURAN — LICENSED PROFESSIONAL ENGINEER

HYE-TA-S2-5097
Drawing Title

OUTRIGGER ELEVATION L60 AT GRID LINE FS & A.3

Drawing Number
S2-5097
KPF Sheet Drawing Number
S-527.01

© 2013 KOHN PEDERSEN FOX ASSOCIATES PC. All rights reserved.

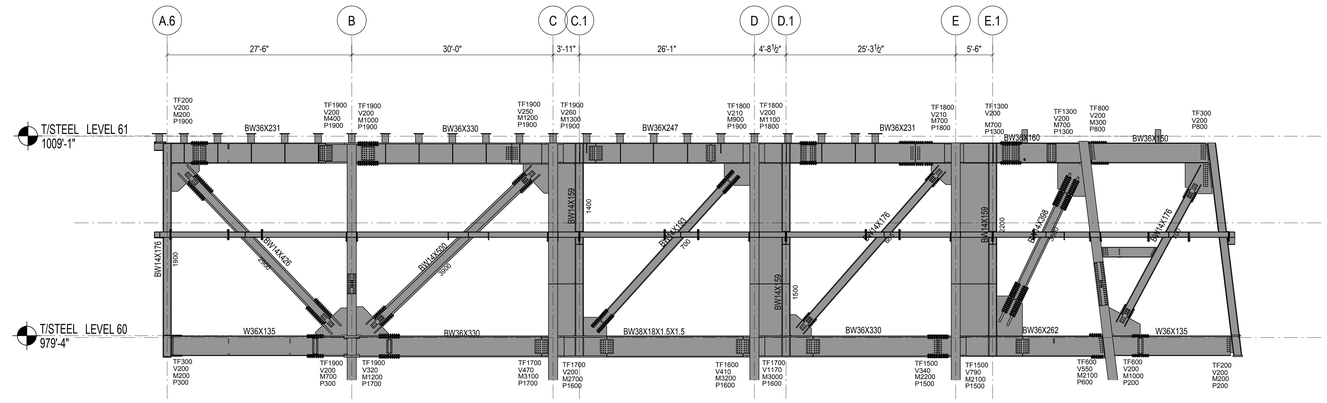

1 ELEVATION AT GRID LINE 13
⅛" = 1'-0"

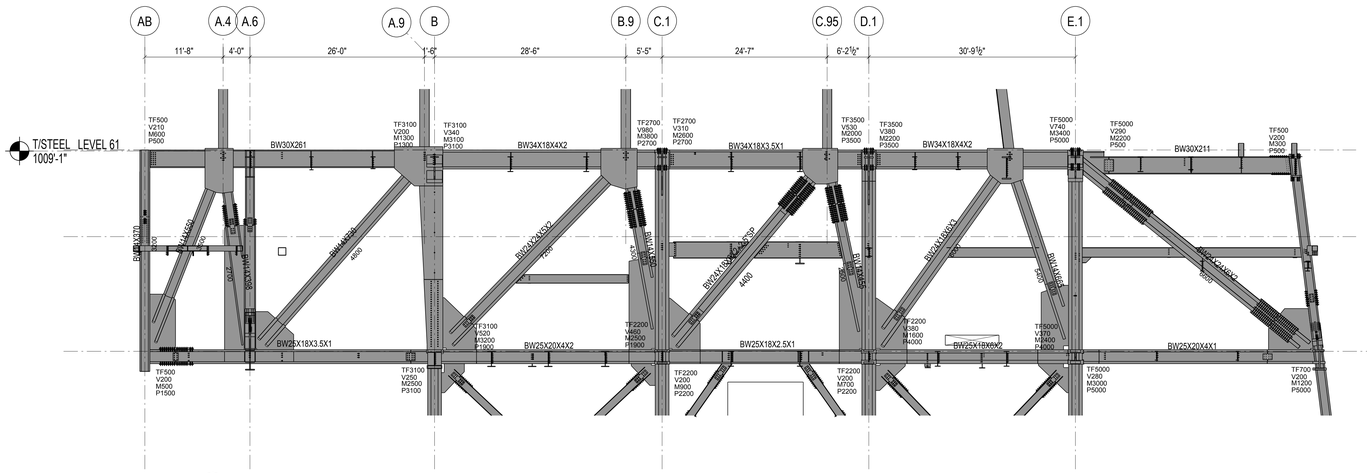

2 ELEVATION AT GRID LINE 14
⅛" = 1'-0"

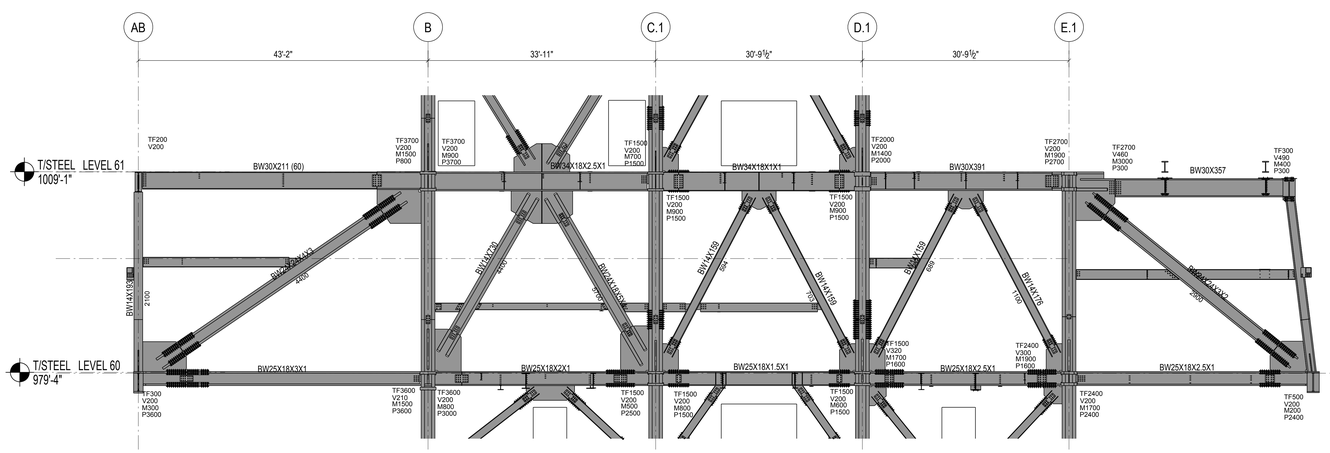

3 ELEVATION AT GRID LINE 15
⅛" = 1'-0"

SHEET NOTES :

1. UNO, AT BRACED FRAME BEAMS INDICATED ON THIS ELEVATION, PROVIDE 2 STUDS/FT. FOR ALL REGIONS WHERE SLAB IS PRESENT ALONG THE BEAM LENGTH.

Damian Titus
Buildings
APPROVED
Under Directive 2 of 1975
MECHANICAL APPLICATION
Date: 05/03/2017
NYC Development Hub

HUDSON YARDS - RETAIL PODIUM AND TOWER A
500 WEST 33RD STREET
New York, NY

Client
Related Companies
60 Columbus Circle
New York, NY 10023
TEL: 212.801.1000 FAX: 212.801.1048

Oxford Properties Group
320 Park Avenue, 17th Floor
New York, NY 10022
TEL: 212.986.7514 FAX: 212.986.7510

Architect
Kohn Pedersen Fox Associates
11 West 42nd Street
New York, New York 10036
TEL: 212.977.6500 FAX: 212.956.2526

Structural Engineer
Thornton Tomasetti, Inc.
51 Madison Avenue
New York, New York 10010
TEL: 917.661.7800 FAX: 718.661.7801

Mechanical, Electrical, Plumbing, Fire Protection
Jaros Baum & Bolles Consulting Engineers
80 Pine Street
New York, NY 10013
TEL: 212.530.9300 FAX: 212.269.5894

Retail Interior Design & Planning
Elkus-Manfredi
300 A Street
Boston, MA 02210
TEL: 617.426.1300

No.	Description	Date
2	D.O.B AMENDMENT #2	10/15/2016
1	D.O.B BUILDING PERMIT FILING	12/10/2014

Key Plan

09 06 03
08 05 02
07 04 01

Issue Date 12/10/2014
Project No. N11328.00
Drawn By
Sheet Number

STATE OF NEW YORK — DANIEL J. DUNN — 090 854 — LICENSED PROFESSIONAL ENGINEER

HYE-TA-S2-5098
Drawing Title

OUTRIGGER ELEVATIONS L60 AT GRID LINES 13, 14, & 15

Drawing Number
S2-5098
Hi Rise Drawing Number
S-528.01

© 2013 KOHN PEDERSEN FOX ASSOCIATES PC. All rights reserved.

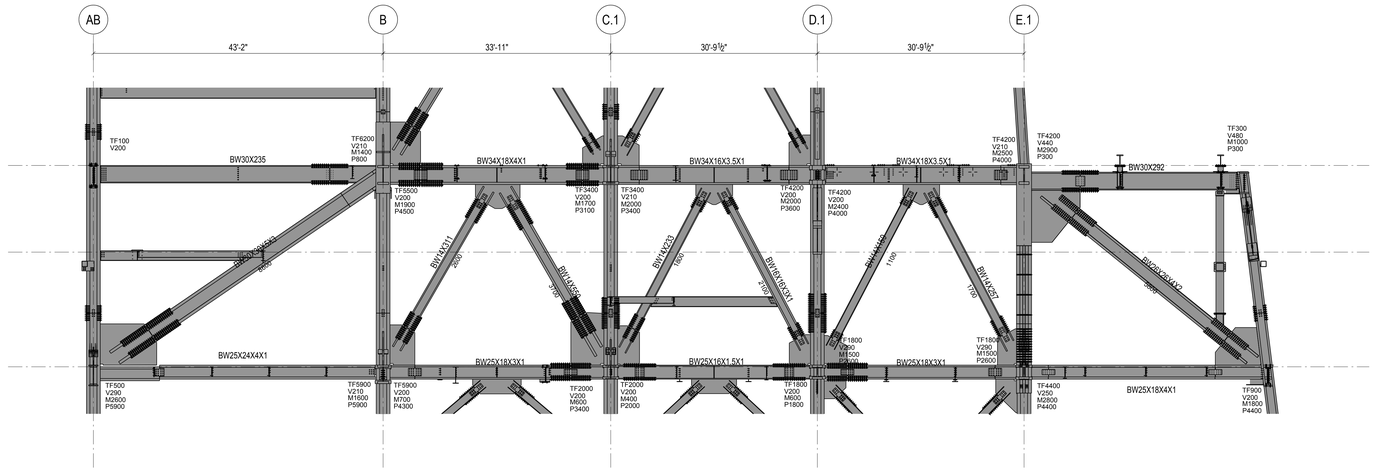

1 ELEVATION AT GRID LINE 16
1/8" = 1'-0"

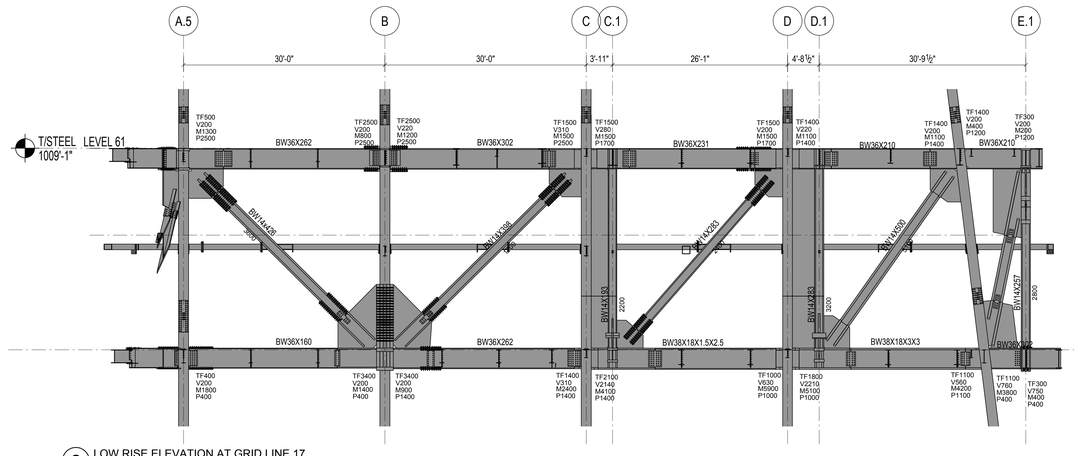

2 LOW RISE ELEVATION AT GRID LINE 17
1/8" = 1'-0"

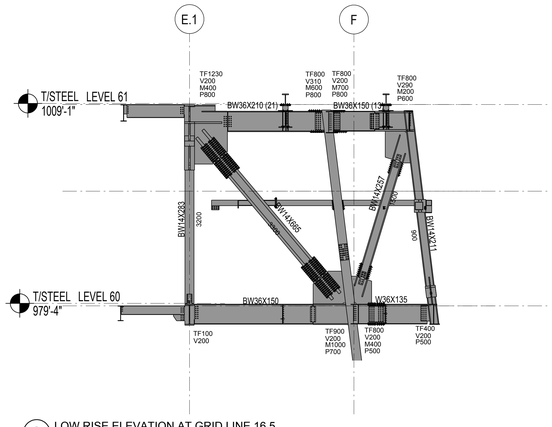

3 LOW RISE ELEVATION AT GRID LINE 16.5
1/8" = 1'-0"

SHEET NOTES :

1. UNO, AT BRACED FRAME BEAMS INDICATED ON THIS ELEVATION, PROVIDE 2 STUDS/FT. FOR ALL REGIONS WHERE SLAB IS PRESENT ALONG THE BEAM LENGTH.

Damian Titus
Buildings
APPROVED
Under Directive 2 of 1975
AMENDED APPLICATION
Date: 05/03/2017
NYC Development Hub

HUDSON YARDS - RETAIL PODIUM AND TOWER A
500 WEST 33RD STREET
New York, NY

Client
Related Companies
60 Columbus Circle
New York, NY 10023
TEL: 212.801.1000 FAX: 212.801.1048

Oxford Properties Group
320 Park Avenue, 17th Floor
New York, NY 10022
TEL: 212.986.7514 FAX: 212.986.7510

Architect
Kohn Pedersen Fox Associates
11 West 42nd Street
New York, New York 10036
TEL: 212.977.6500 FAX: 212.956.2526

Structural Engineer
Thornton Tomasetti, Inc.
51 Madison Avenue
New York, New York 10010
TEL: 917.661.7800 FAX: 718.661.7801

Mechanical, Electrical, Plumbing, Fire Protection
Jaros Baum & Bolles Consulting Engineers
80 Pine Street
New York, NY 10013
TEL: 212.530.9300 FAX: 212.269.5894

Retail Interior Design & Planning
Elkus-Manfredi
300 A Street
Boston, MA 02210
TEL: 617.426.1300

No.	Description	Date
2	D.O.B AMENDMENT #2	10/15/2016
1	D.O.B BUILDING PERMIT FILING	12/10/2014

Key Plan

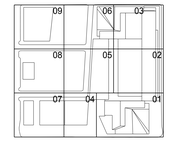

Issue Date 12/10/2014
Project No. N11328.00
Drawn By:
Sheet Number

HYE-TA-S2-5099
Drawing Title

OUTRIGGER ELEVATIONS L60 AT GRID LINES 16, 17, & 16.5

Drawing Number
S2-5099
B-Scan Drawing Number
S-529.01

SHEET 265 OF 443

© 2013 KOHN PEDERSEN FOX ASSOCIATES PC. All rights reserved.

DEPT OF BLDGS 421185253 Job Number
B3905260295 Scan Code

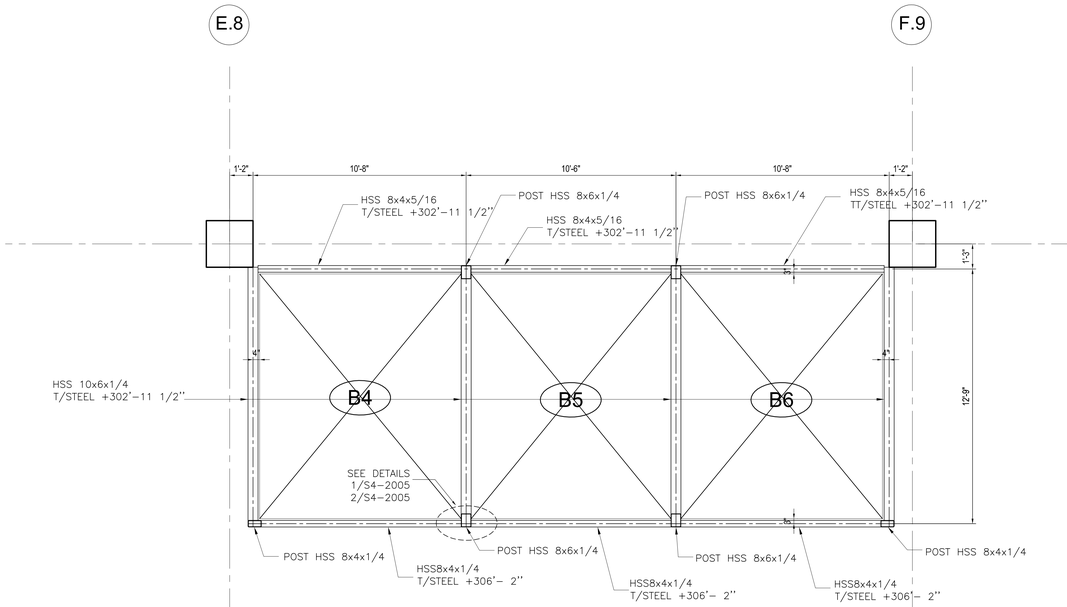

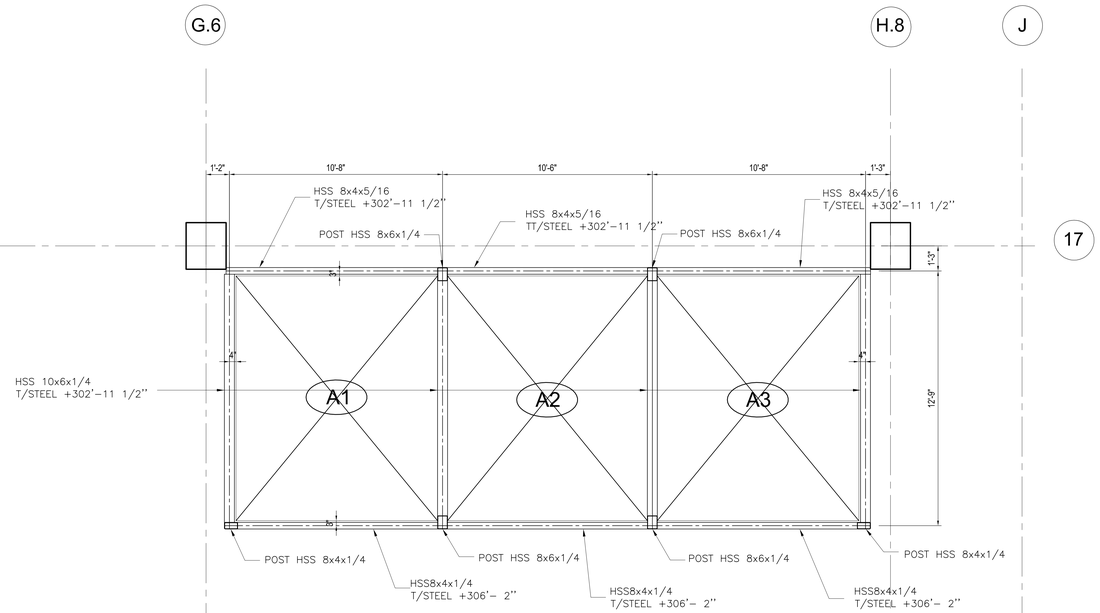

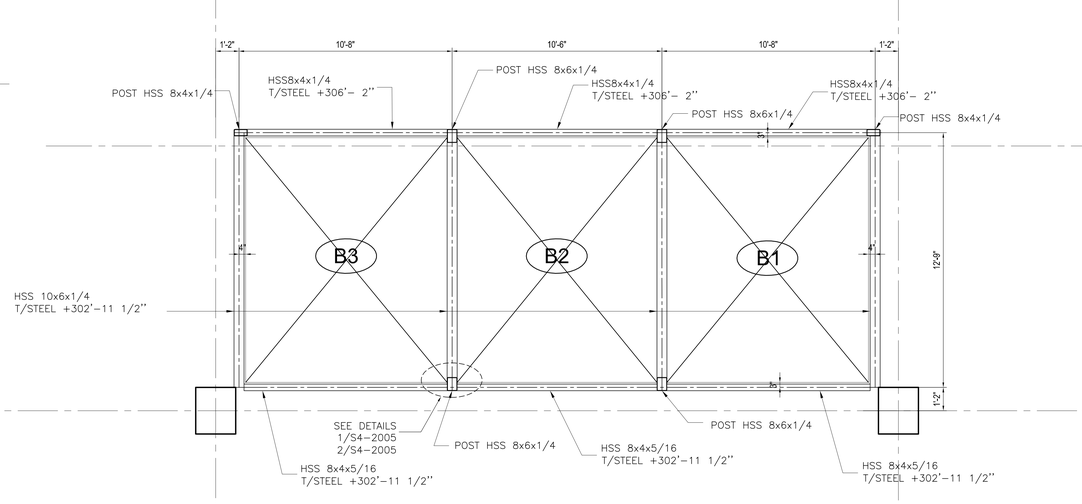

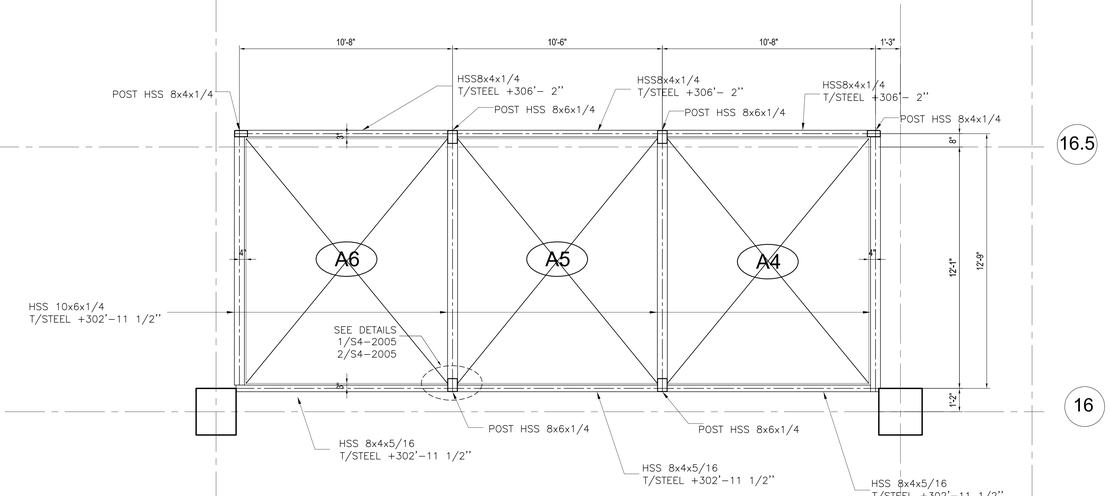

1 ELEVATOR INTERMEDIATE RAIL SUPPORT PLAN - LEVEL 15 TO LEVEL 16

SCALE: 3/8" = 1'-0"

NOTE:
ALL BEAMS ARE LSV UNLESS OTHERWISE NOTED

HUDSON YARDS - RETAIL PODIUM AND TOWER A

500 WEST 33RD STREET
New York, NY

Client
Related Companies
60 Columbus Circle
New York, NY 10023
TEL: 212.801.1000 FAX: 212.801.1048

Oxford Properties Group
320 Park Avenue, 17th Floor
New York, NY 10022
TEL: 212.986.7514 FAX: 212.986.7510

Architect
Kohn Pedersen Fox Associates
11 West 42nd Street
New York, New York 10036
TEL: 212.977.6500 FAX: 212.956.2526

Structural Engineer
Thornton Tomasetti, Inc.
51 Madison Avenue
New York, New York 10010
TEL: 917.661.7800 FAX: 718.661.7801

Mechanical, Electrical, Plumbing, Fire Protection
Jaros Baum & Bolles Consulting Engineers
80 Pine Street
New York, NY 10013
TEL: 212.530.9300 FAX: 212.269.5894

Retail Interior Design & Planning
Elkus-Manfredi
300 A Street
Boston, MA 02210
TEL: 617.426.1300

No.	Description	Date
1	D.O.B. AMENDMENT #2	10/15/2016

Key Plan

Issue Date: 10/15/2016
Project No. N11328.00
Drawn By: Author
Sheet Number

Damian Titus
Buildings
APPROVED
Under Directive 2 of 1975
AMENDED APPLICATION
Date: 05/03/2017
NYC Development Hub

Drawing Title
TOWER A ELEVATOR INTERMEDIATE SUPPORT PART PLANS XXIII

Drawing Number
S3-6123
If Sent Drawing Number
S-530.00

DEPT OF BLDGS 421195255 Job Number
E5956500284 Scan Code

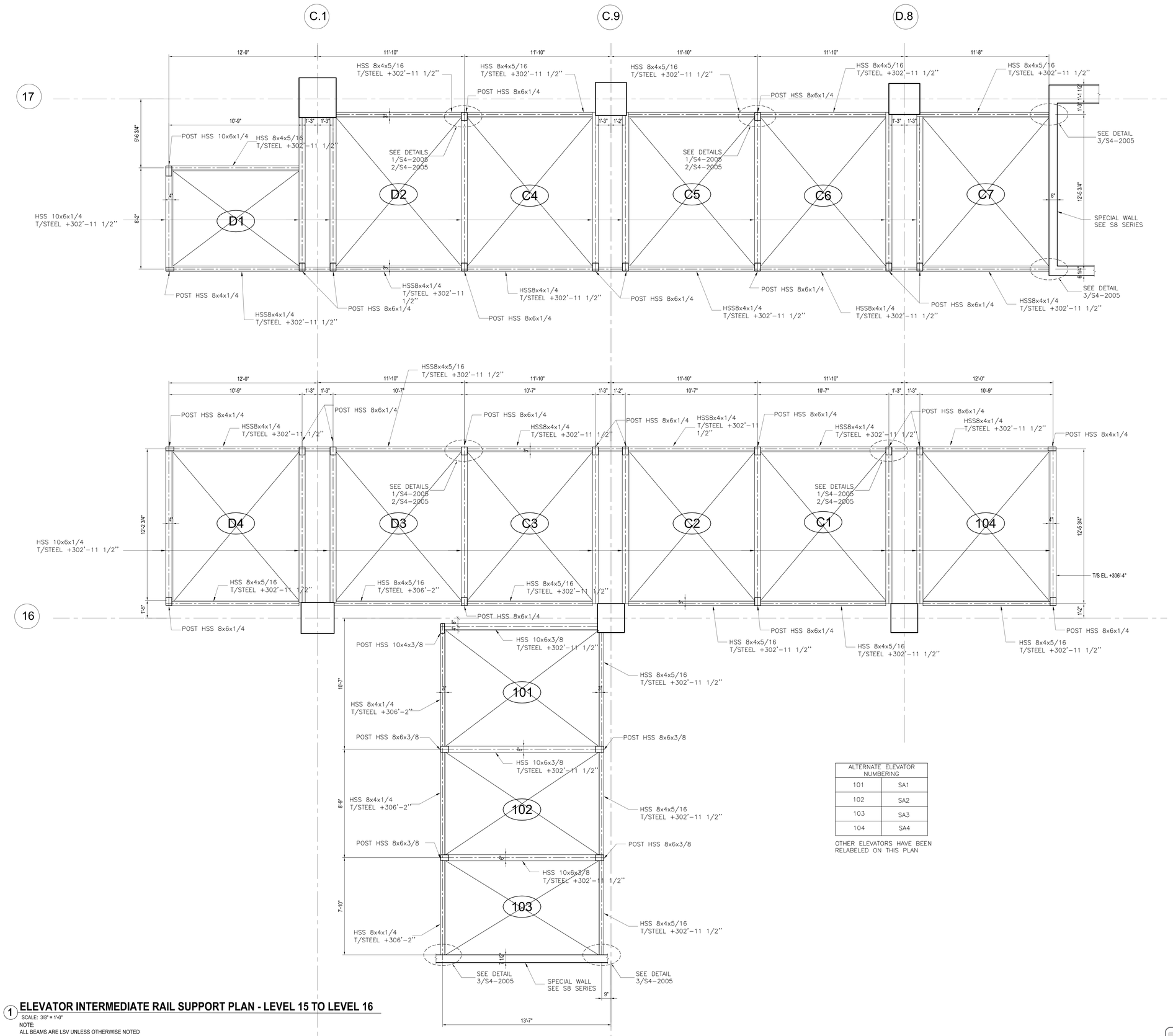

ALTERNATE ELEVATOR NUMBERING	
101	SA1
102	SA2
103	SA3
104	SA4

OTHER ELEVATORS HAVE BEEN RELABELED ON THIS PLAN

1 ELEVATOR INTERMEDIATE RAIL SUPPORT PLAN - LEVEL 15 TO LEVEL 16

SCALE: 3/8" = 1'-0"

NOTE:
ALL BEAMS ARE LSV UNLESS OTHERWISE NOTED

HUDSON YARDS - RETAIL PODIUM AND TOWER A

500 WEST 33RD STREET
New York, NY

Client
Related Companies
60 Columbus Circle
New York, NY 10023
TEL: 212.801.1000 FAX: 212.801.1048

Oxford Properties Group
320 Park Avenue, 17th Floor
New York, NY 10022
TEL: 212.986.7514 FAX: 212.986.7510

Architect
Kohn Pedersen Fox Associates
11 West 42nd Street
New York, New York 10036
TEL: 212.977.6500 FAX: 212.956.2526

Structural Engineer
Thornton Tomasetti, Inc.
51 Madison Avenue
New York, New York 10010
TEL: 917.661.7800 FAX: 718.661.7801

Mechanical, Electrical, Plumbing, Fire Protection
Jaros Baum & Bolles Consulting Engineers
80 Pine Street
New York, NY 10013
TEL: 212.530.9300 FAX: 212.269.5894

Retail Interior Design & Planning
Elkus-Manfredi
300 A Street
Boston, MA 02210
TEL: 617.426.1300

No.	Description	Date
1	D.O.B. AMENDMENT #2	10/15/2016

Key Plan

Issue Date: 10/15/2016
Project No. N11328.00
Drawn By Author
Sheet Number

Damian Titus
Buildings
APPROVED
Under Directive 1 of 1975
AMENDED APPLICATION
Date: 05/03/2017
NYC Development Hub

Drawing Title
TOWER A ELEVATOR INTERMEDIATE SUPPORT PART PLANS XXIV

Drawing Number
S3-6124
BCAM Drawing Number
S-531.00 SHEET 301 OF 443

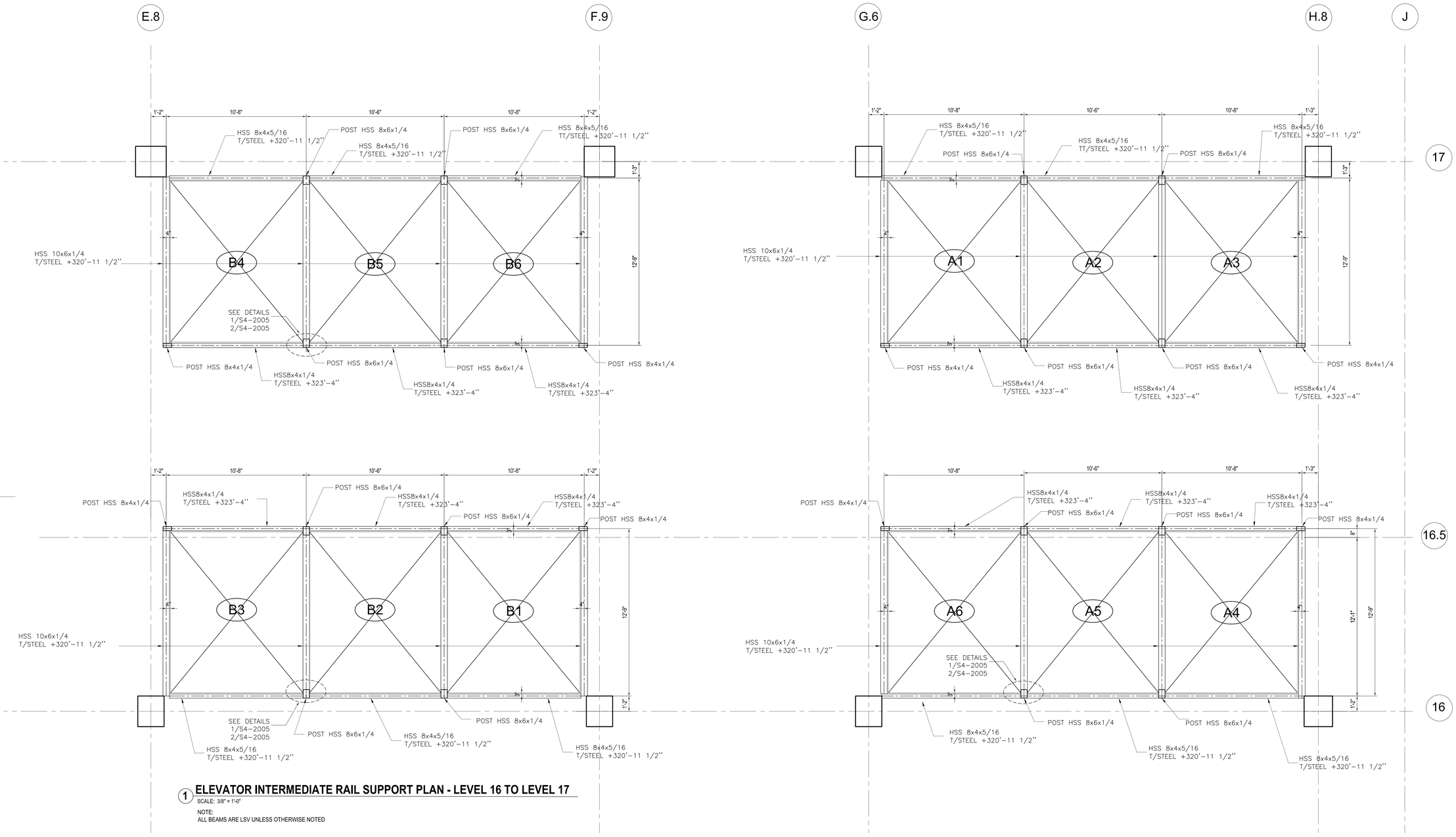

1 **ELEVATOR INTERMEDIATE RAIL SUPPORT PLAN - LEVEL 16 TO LEVEL 17**

SCALE: 3/8" = 1'-0"

NOTE:
ALL BEAMS ARE LSV UNLESS OTHERWISE NOTED

HUDSON YARDS - RETAIL PODIUM AND TOWER A

500 WEST 33RD STREET
New York, NY

Client
Related Companies
60 Columbus Circle
New York, NY 10023
TEL: 212.801.1000 FAX: 212.801.1048

Oxford Properties Group
320 Park Avenue, 17th Floor
New York, NY 10022
TEL: 212.986.7514 FAX: 212.986.7510

Architect
Kohn Pedersen Fox Associates
11 West 42nd Street
New York, New York 10036
TEL: 212.977.6500 FAX: 212.956.2526

Structural Engineer
Thornton Tomasetti, Inc.
51 Madison Avenue
New York, New York 10010
TEL: 917.661.7800 FAX: 718.661.7801

Mechanical, Electrical, Plumbing, Fire Protection
Jaros Baum & Bolles Consulting Engineers
80 Pine Street
New York, NY 10013
TEL: 212.530.9300 FAX: 212.269.5894

Retail Interior Design & Planning
Elkus-Manfredi
300 A Street
Boston, MA 02210
TEL: 617.426.1300

No.	Description	Date
1	D.O.B. AMENDMENT #2	10/15/2016

Key Plan

Issue Date: 10/15/2016
Project No. N11328.00
Drawn By: Author
Sheet Number

Damian Titus
Buildings
APPROVED
Under Directive 2 of 1975
AMENDED APPLICATION
Date: 05/03/2017
NYC Development Hub

Drawing Title
TOWER A ELEVATOR INTERMEDIATE SUPPORT PART PLANS XXV

Drawing Number
S3-6125
B-Scan Drawing Number
S-532.00

© 2016 KOHN PEDERSEN FOX ASSOCIATES PC All Rights Reserved

DEPT OF BLDGS 421395255 Job Number
E5325.640185 Scan Code

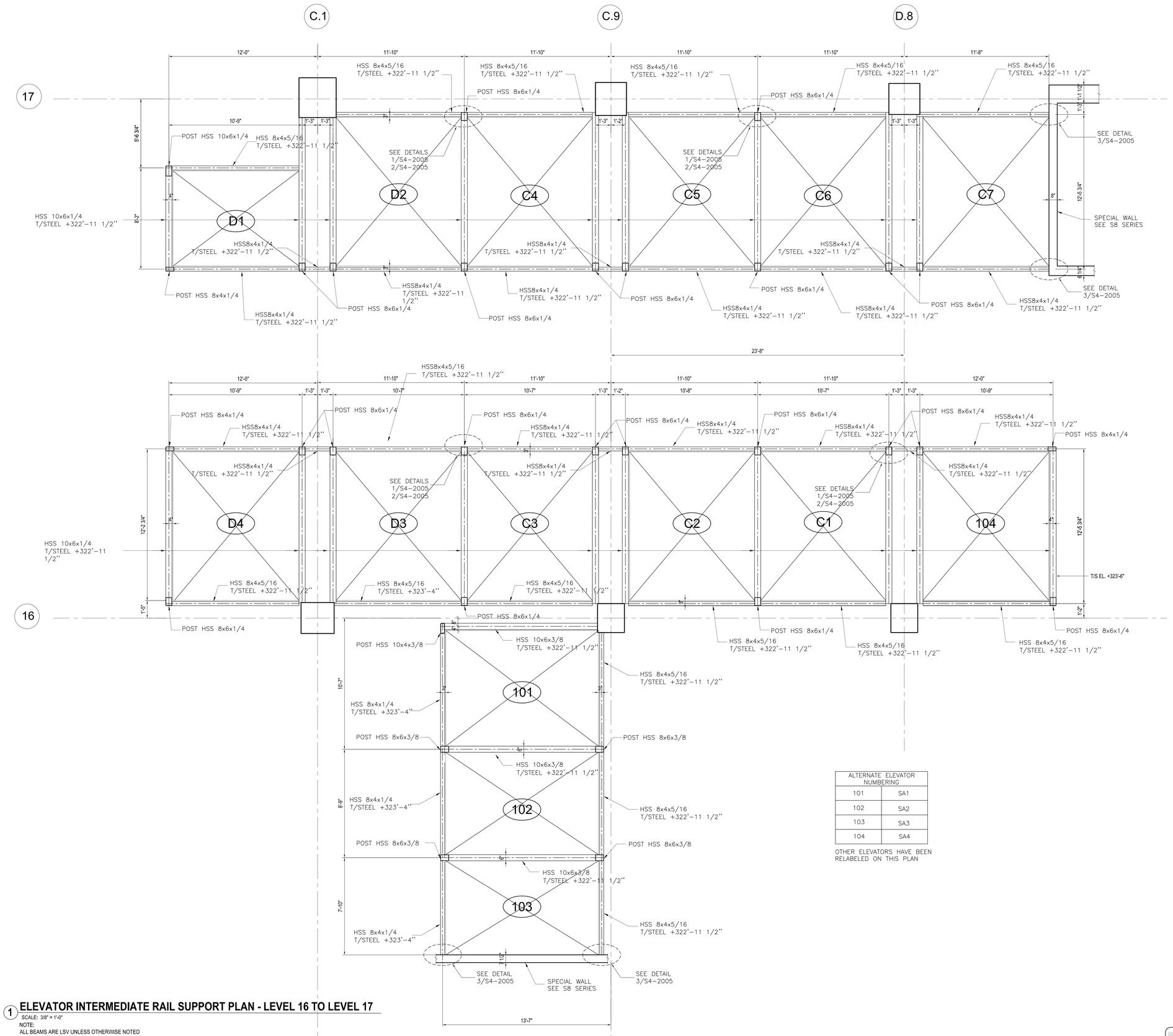

ALTERNATE ELEVATOR NUMBERING	
101	SA1
102	SA2
103	SA3
104	SA4

OTHER ELEVATORS HAVE BEEN RELABELED ON THIS PLAN

1 ELEVATOR INTERMEDIATE RAIL SUPPORT PLAN - LEVEL 16 TO LEVEL 17

SCALE: 3/8" = 1'-0"

NOTE:
ALL BEAMS ARE LSV UNLESS OTHERWISE NOTED

HUDSON YARDS - RETAIL PODIUM AND TOWER A

500 WEST 33RD STREET
New York, NY

Client
Related Companies
60 Columbus Circle
New York, NY 10023
TEL: 212.801.1000 FAX: 212.801.1048

Oxford Properties Group
320 Park Avenue, 17th Floor
New York, NY 10022
TEL: 212.986.7514 FAX: 212.986.7510

Architect
Kohn Pedersen Fox Associates
11 West 42nd Street
New York, New York 10036
TEL: 212.977.6500 FAX: 212.956.2526

Structural Engineer
Thornton Tomasetti, Inc.
51 Madison Avenue
New York, New York 10010
TEL: 917.661.7800 FAX: 718.661.7801

Mechanical, Electrical, Plumbing, Fire Protection
Jaros Baum & Bolles Consulting Engineers
80 Pine Street
New York, NY 10013
TEL: 212.530.9300 FAX: 212.269.5894

Retail Interior Design & Planning
Elkus-Manfredi
300 A Street
Boston, MA 02210
TEL: 617.426.1300

No.	Description	Date
1	D.O.B. AMENDMENT #2	10/15/2016

Key Plan

Issue Date: 10/15/2016
Project No. N11328.00
Drawn By Author
Sheet Number

Damian Titus
Buildings
APPROVED
Under Directive 1 of 1975
AMENDED APPLICATION
Date: 05/03/2017
NYC Development Hub

Drawing Title
TOWER A ELEVATOR INTERMEDIATE SUPPORT PART PLANS XXVI

Drawing Number
S3-6126
BCAM Drawing Number
S-533.00 SHEET 303 OF 443

© COPYRIGHT 2016 KOHN PEDERSEN FOX ASSOCIATES

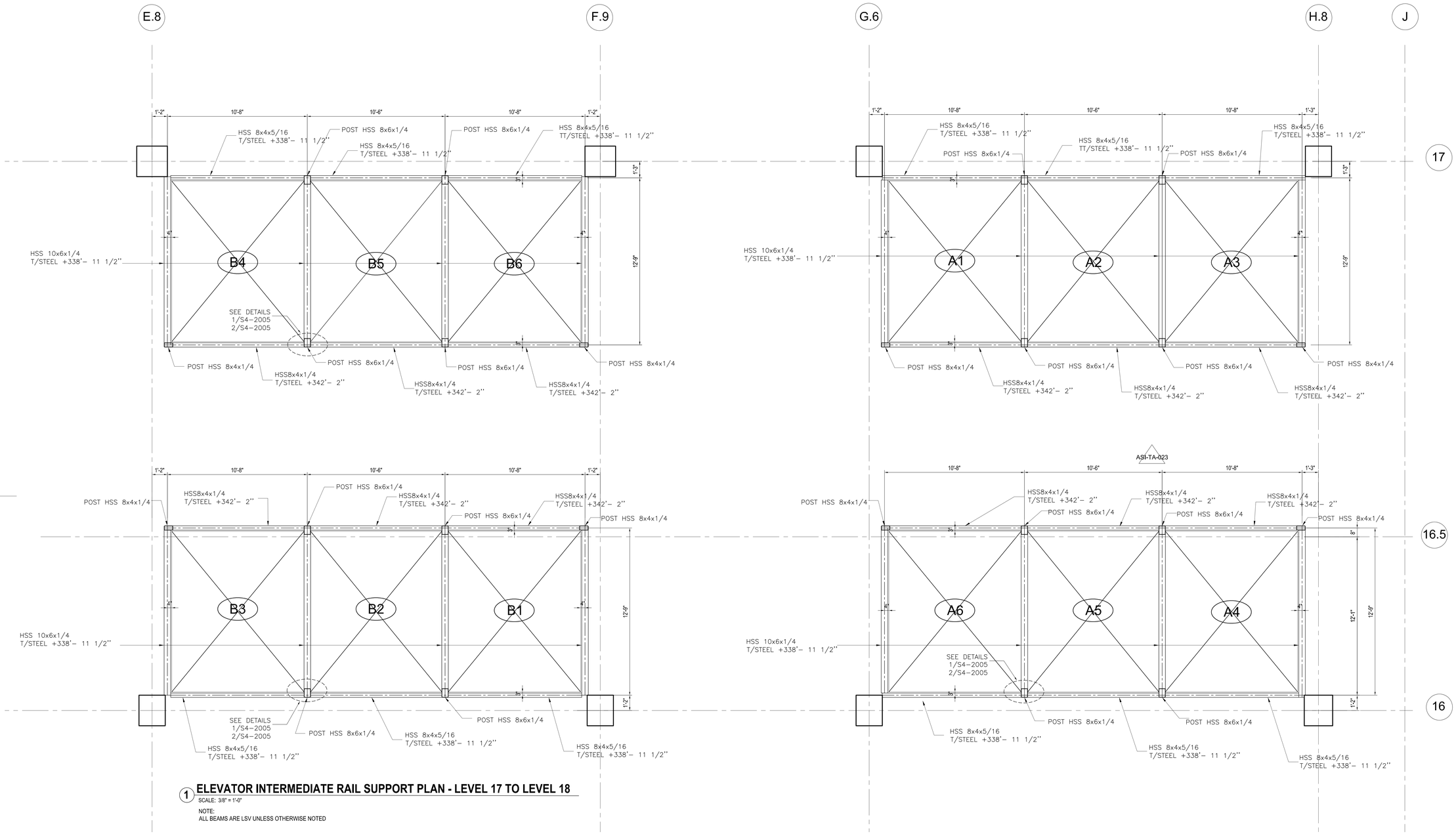

1 **ELEVATOR INTERMEDIATE RAIL SUPPORT PLAN - LEVEL 17 TO LEVEL 18**

SCALE: 3/8" = 1'-0"

NOTE:
ALL BEAMS ARE LSV UNLESS OTHERWISE NOTED

HUDSON YARDS - RETAIL PODIUM AND TOWER A

500 WEST 33RD STREET
New York, NY

Client
Related Companies
60 Columbus Circle
New York, NY 10023
TEL: 212.801.1000 FAX: 212.801.1048

Oxford Properties Group
320 Park Avenue, 17th Floor
New York, NY 10022
TEL: 212.986.7514 FAX: 212.986.7510

Architect
Kohn Pedersen Fox Associates
11 West 42nd Street
New York, New York 10036
TEL: 212.977.6500 FAX: 212.956.2526

Structural Engineer
Thornton Tomasetti, Inc.
51 Madison Avenue
New York, New York 10010
TEL: 917.661.7800 FAX: 718.661.7801

Mechanical, Electrical, Plumbing, Fire Protection
Jaros Baum & Bolles Consulting Engineers
80 Pine Street
New York, NY 10013
TEL: 212.530.9300 FAX: 212.269.5894

Retail Interior Design & Planning
Elkus-Manfredi
300 A Street
Boston, MA 02210
TEL: 617.426.1300

No.	Description	Date
1	D.O.B. AMENDMENT #2	10/15/2016

Key Plan

Issue Date: 10/15/2016
Project No. N11328.00
Drawn By: Author
Sheet Number

Damian Titus
Buildings
APPROVED
Under Directive 2 of 1975
AMENDED APPLICATION
Date: 05/03/2017
NYC Development Hub

Drawing Title
TOWER A ELEVATOR INTERMEDIATE SUPPORT PART PLANS XXVII

Drawing Number
S3-6127
B-Scan Drawing Number
S-534.00

© 2015 KOHN PEDERSEN FOX ASSOCIATES PC. All rights reserved

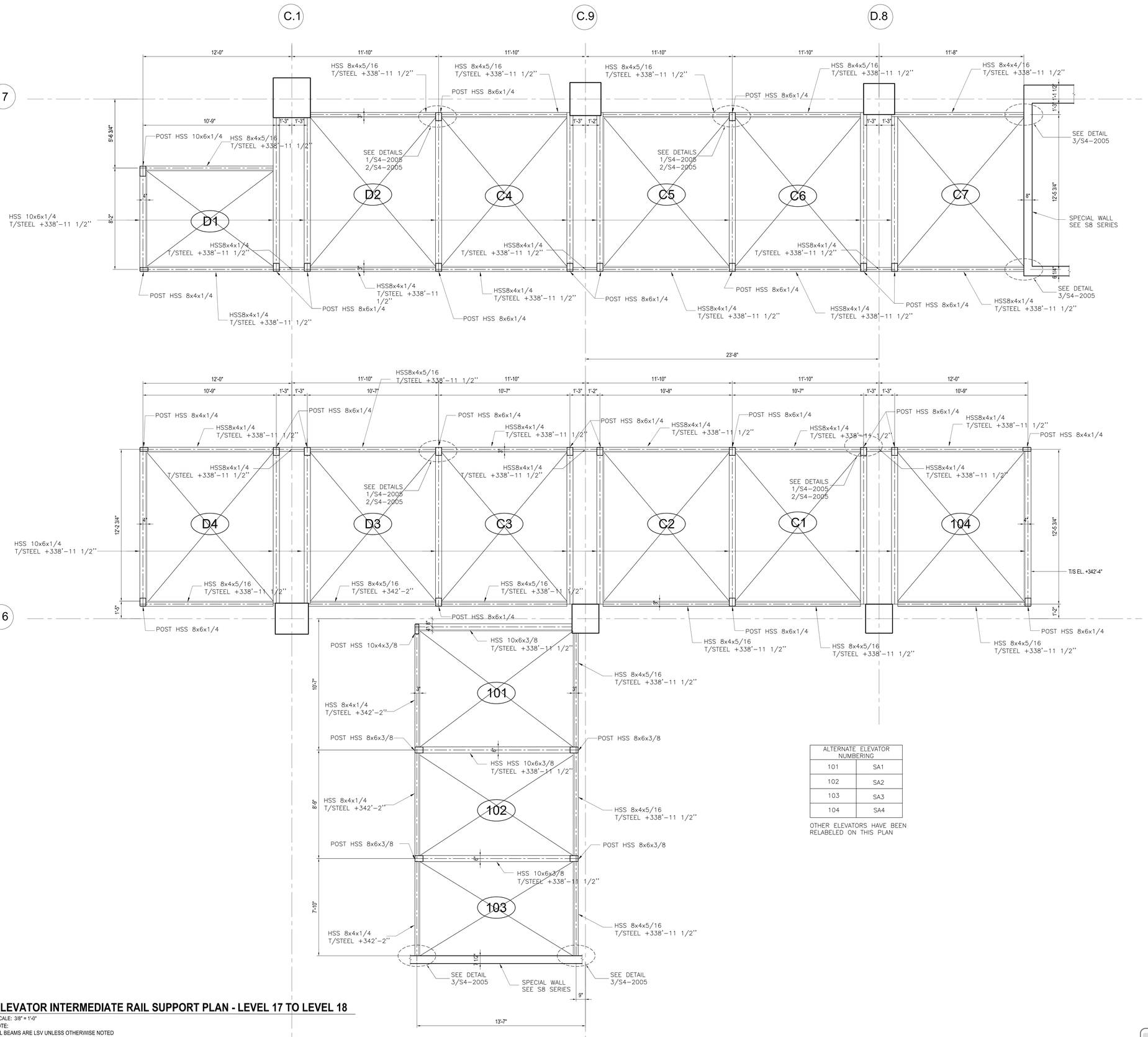

ALTERNATE ELEVATOR NUMBERING	
101	SA1
102	SA2
103	SA3
104	SA4

OTHER ELEVATORS HAVE BEEN RELABELED ON THIS PLAN

1 ELEVATOR INTERMEDIATE RAIL SUPPORT PLAN - LEVEL 17 TO LEVEL 18

SCALE: 3/8" = 1'-0"

NOTE:
ALL BEAMS ARE LSV UNLESS OTHERWISE NOTED

Damian Titus
Buildings
APPROVED
Under Directive 2 of 1975
AMENDED APPLICATION
Date: 05/03/2017
NYC Development Hub

HUDSON YARDS - RETAIL PODIUM AND TOWER A

500 WEST 33RD STREET
New York, NY

Client
Related Companies
60 Columbus Circle
New York, NY 10023
TEL: 212.801.1000 FAX: 212.801.1048

Oxford Properties Group
320 Park Avenue, 17th Floor
New York, NY 10022
TEL: 212.986.7514 FAX: 212.986.7510

Architect
Kohn Pedersen Fox Associates
11 West 42nd Street
New York, New York 10036
TEL: 212.977.6500 FAX: 212.956.2526

Structural Engineer
Thornton Tomasetti, Inc.
51 Madison Avenue
New York, New York 10010
TEL: 917.661.7800 FAX: 718.661.7801

Mechanical, Electrical, Plumbing, Fire Protection
Jaros Baum & Bolles Consulting Engineers
80 Pine Street
New York, NY 10013
TEL: 212.530.9300 FAX: 212.269.5894

Retail Interior Design & Planning
Elkus-Manfredi
300 A Street
Boston, MA 02210
TEL: 617.426.1300

No.	Description	Date
1	D.O.B. AMENDMENT #2	10/15/2016

Key Plan

Issue Date: 10/15/2016
Project No. N11328.00
Drawn By Author
Sheet Number

Drawing Title
TOWER A ELEVATOR INTERMEDIATE SUPPORT PART PLANS XXVIII

Drawing Number
S3-6128
B-Scan Drawing Number
S-535.00

DEPT OF BLDGS 421195255 Job Number
Scan Code

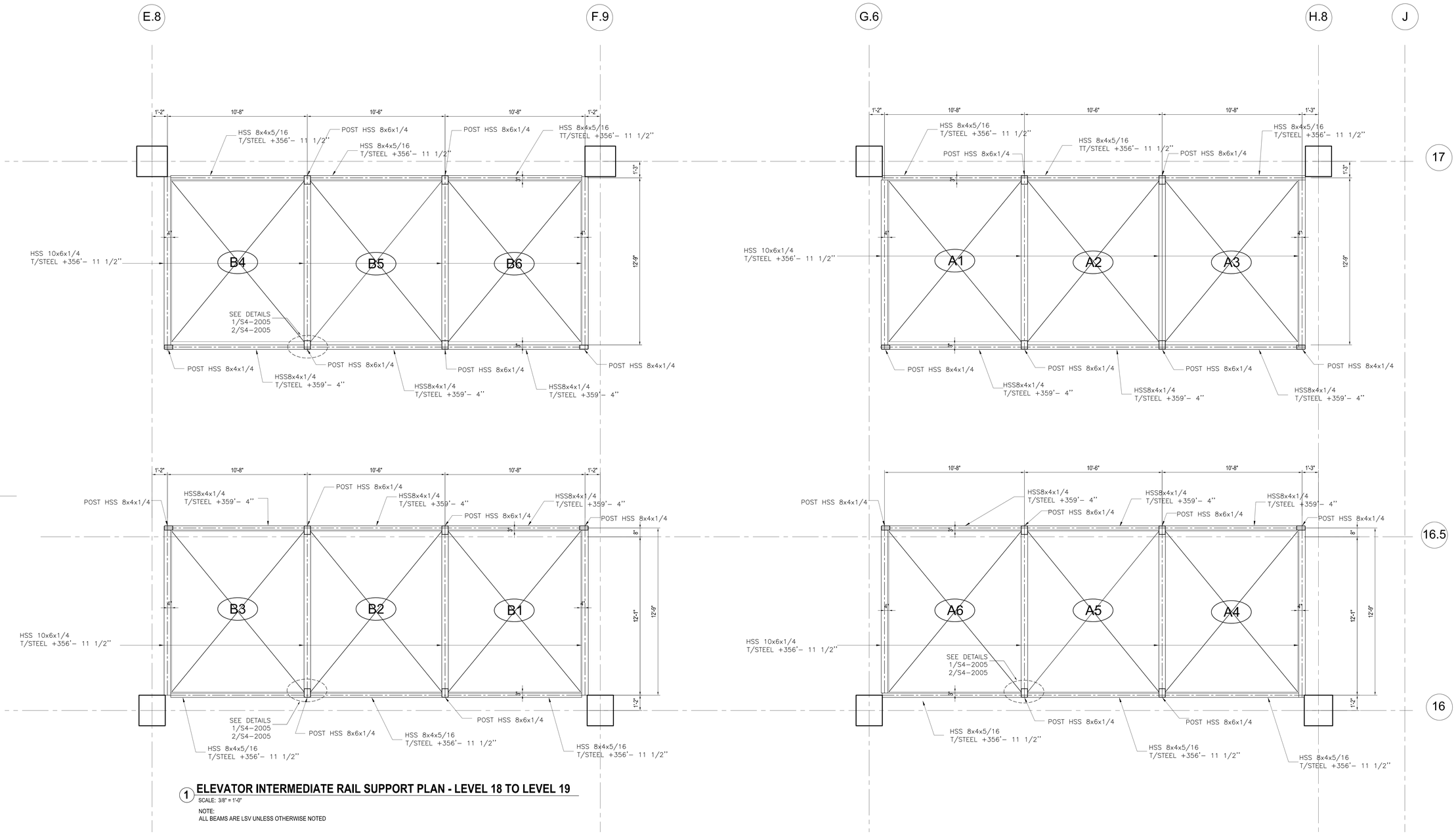

1 ELEVATOR INTERMEDIATE RAIL SUPPORT PLAN - LEVEL 18 TO LEVEL 19

SCALE: 3/8" = 1'-0"

NOTE:
ALL BEAMS ARE LSV UNLESS OTHERWISE NOTED

HUDSON YARDS - RETAIL PODIUM AND TOWER A

500 WEST 33RD STREET
New York, NY

Client
Related Companies
60 Columbus Circle
New York, NY 10023
TEL: 212.801.1000 FAX: 212.801.1048

Oxford Properties Group
320 Park Avenue, 17th Floor
New York, NY 10022
TEL: 212.986.7514 FAX: 212.986.7510

Architect
Kohn Pedersen Fox Associates
11 West 42nd Street
New York, New York 10036
TEL: 212.977.6500 FAX: 212.956.2526

Structural Engineer
Thornton Tomasetti, Inc.
51 Madison Avenue
New York, New York 10010
TEL: 917.661.7800 FAX: 718.661.7801

Mechanical, Electrical, Plumbing, Fire Protection
Jaros Baum & Bolles Consulting Engineers
80 Pine Street
New York, NY 10013
TEL: 212.530.9300 FAX: 212.269.5894

Retail Interior Design & Planning
Elkus-Manfredi
300 A Street
Boston, MA 02210
TEL: 617.426.1300

No.	Description	Date
1	D.O.B. AMENDMENT #2	10/15/2016

Key Plan

Issue Date: 10/15/2016
Project No. N11328.00
Drawn By: Author
Sheet Number

Damian Titus
Buildings
APPROVED
Under Directive 2 of 1975
AMENDED APPLICATION
Date: 05/03/2017
NYC Development Hub

Drawing Title
TOWER A ELEVATOR INTERMEDIATE SUPPORT PART PLANS XXIX

Drawing Number
S3-6129
If Sheet Drawing Number
S-536.00 SHEET 306 OF 443

© 2013 KOHN PEDERSEN FOX ASSOCIATES PC. All rights reserved.

DEPT OF BLDGS 421185255 Job Number
B5 9780307035 Scan Code

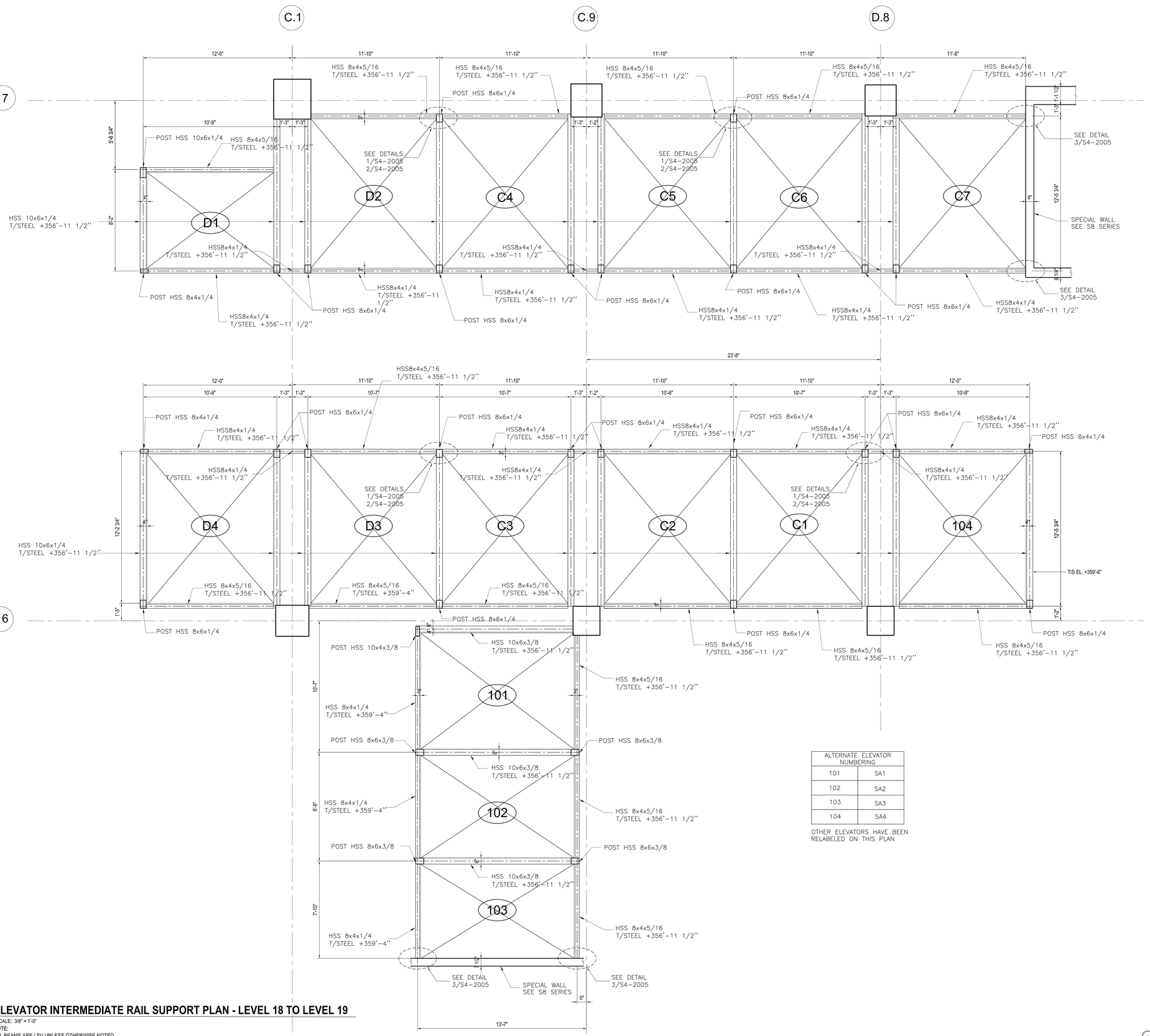

ALTERNATE ELEVATOR NUMBERING	
101	SA1
102	SA2
103	SA3
104	SA4

OTHER ELEVATORS HAVE BEEN RELABELED ON THIS PLAN

1 ELEVATOR INTERMEDIATE RAIL SUPPORT PLAN - LEVEL 18 TO LEVEL 19

SCALE: 3/8" = 1'-0"

NOTE:
ALL BEAMS ARE LSV UNLESS OTHERWISE NOTED

HUDSON YARDS - RETAIL PODIUM AND TOWER A

500 WEST 33RD STREET
New York, NY

Client
Related Companies
60 Columbus Circle
New York, NY 10023
TEL: 212.801.1000 FAX: 212.801.1048

Oxford Properties Group
320 Park Avenue, 17th Floor
New York, NY 10022
TEL: 212.986.7514 FAX: 212.986.7510

Architect
Kohn Pedersen Fox Associates
11 West 42nd Street
New York, New York 10036
TEL: 212.977.6500 FAX: 212.956.2526

Structural Engineer
Thornton Tomasetti, Inc.
51 Madison Avenue
New York, New York 10010
TEL: 917.661.7800 FAX: 718.661.7801

Mechanical, Electrical, Plumbing, Fire Protection
Jaros Baum & Bolles Consulting Engineers
80 Pine Street
New York, NY 10013
TEL: 212.530.9300 FAX: 212.269.5894

Retail Interior Design & Planning
Elkus-Manfredi
300 A Street
Boston, MA 02210
TEL: 617.426.1300

No.	Description	Date
1	D.O.B. AMENDMENT #2	10/15/2016

Key Plan

Issue Date: 10/15/2016
Project No. N11328.00
Drawn By Author
Sheet Number

Damian Titus
APPROVED
Under Directive 2 of 1975
AMENDED APPLICATION
Date: 05/03/2017
NYC Development Hub

Drawing Title
TOWER A ELEVATOR INTERMEDIATE SUPPORT PART PLANS XXX

Drawing Number
S3-6130
Revit Drawing Number
S-537.00 SHEET 307 OF 443

© 2015 KOHN PEDERSEN FOX ASSOCIATES PC. All rights reserved.

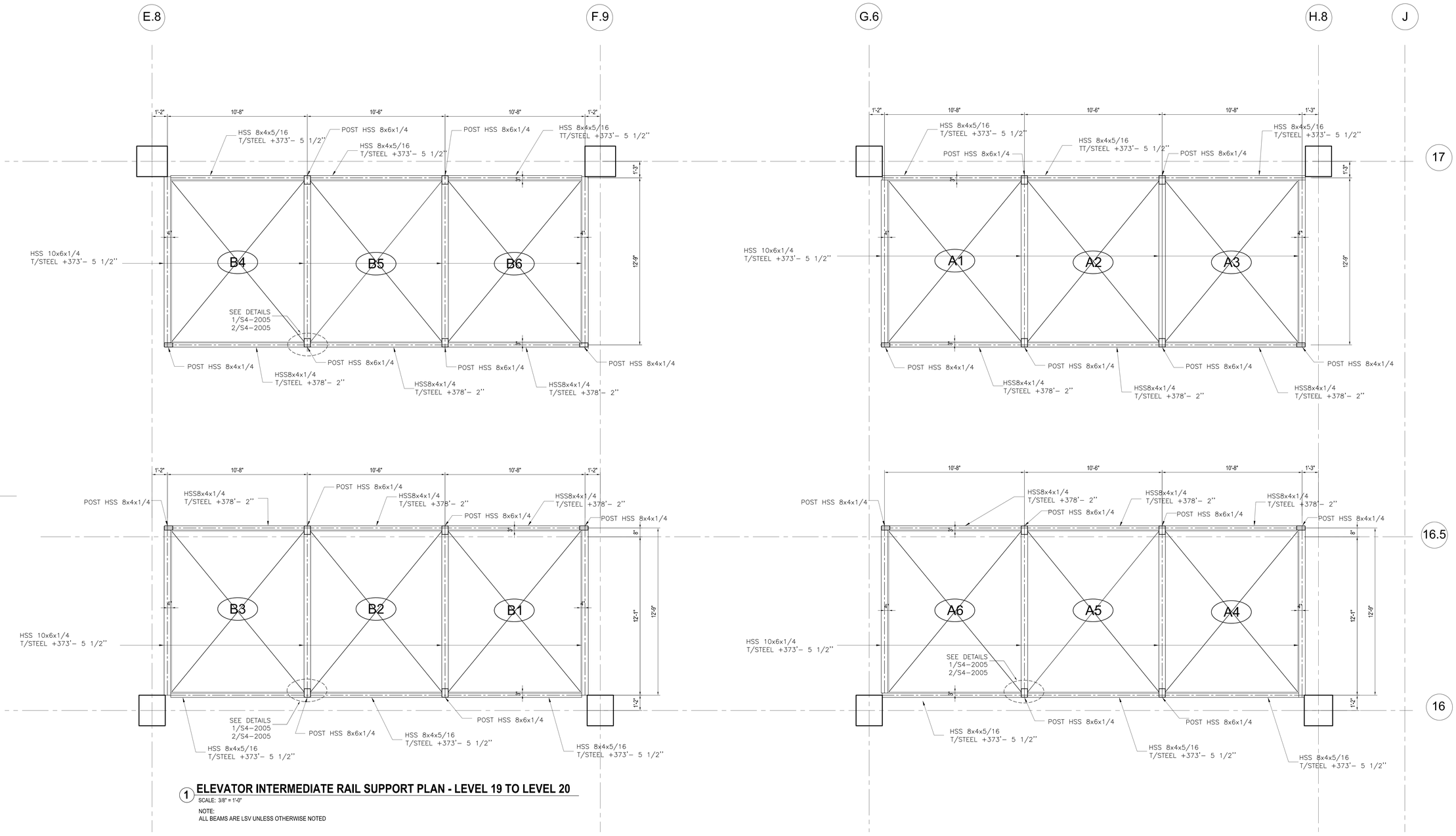

1 **ELEVATOR INTERMEDIATE RAIL SUPPORT PLAN - LEVEL 19 TO LEVEL 20**

SCALE: 3/8" = 1'-0"

NOTE:
ALL BEAMS ARE LSV UNLESS OTHERWISE NOTED

HUDSON YARDS - RETAIL PODIUM AND TOWER A

500 WEST 33RD STREET
New York, NY

Client
Related Companies
60 Columbus Circle
New York, NY 10023
TEL: 212.801.1000 FAX: 212.801.1048

Oxford Properties Group
320 Park Avenue, 17th Floor
New York, NY 10022
TEL: 212.986.7514 FAX: 212.986.7510

Architect
Kohn Pedersen Fox Associates
11 West 42nd Street
New York, New York 10036
TEL: 212.977.6500 FAX: 212.956.2526

Structural Engineer
Thornton Tomasetti, Inc.
51 Madison Avenue
New York, New York 10010
TEL: 917.661.7800 FAX: 718.661.7801

Mechanical, Electrical, Plumbing, Fire Protection
Jaros Baum & Bolles Consulting Engineers
80 Pine Street
New York, NY 10013
TEL: 212.530.9300 FAX: 212.269.5894

Retail Interior Design & Planning
Elkus-Manfredi
300 A Street
Boston, MA 02210
TEL: 617.426.1300

No.	Description	Date
1	D.O.B. AMENDMENT #2	10/15/2016

Key Plan

Issue Date: 10/15/2016
Project No. N11328.00
Drawn By: Author
Sheet Number

Damian Titus
Buildings
APPROVED
Under Directive 2 of 1975
AMENDED APPLICATION
Date: 05/03/2017
NYC Development Hub

Drawing Title
TOWER A ELEVATOR INTERMEDIATE SUPPORT PART PLANS XXXI

Drawing Number
S3-6131
B-Scan Drawing Number
S-538.00

© 2013 KOHN PEDERSEN FOX ASSOCIATES PC. All rights reserved.

DEPT OF BLDGS 421185255 Job Number
E5230552625 Scan Code

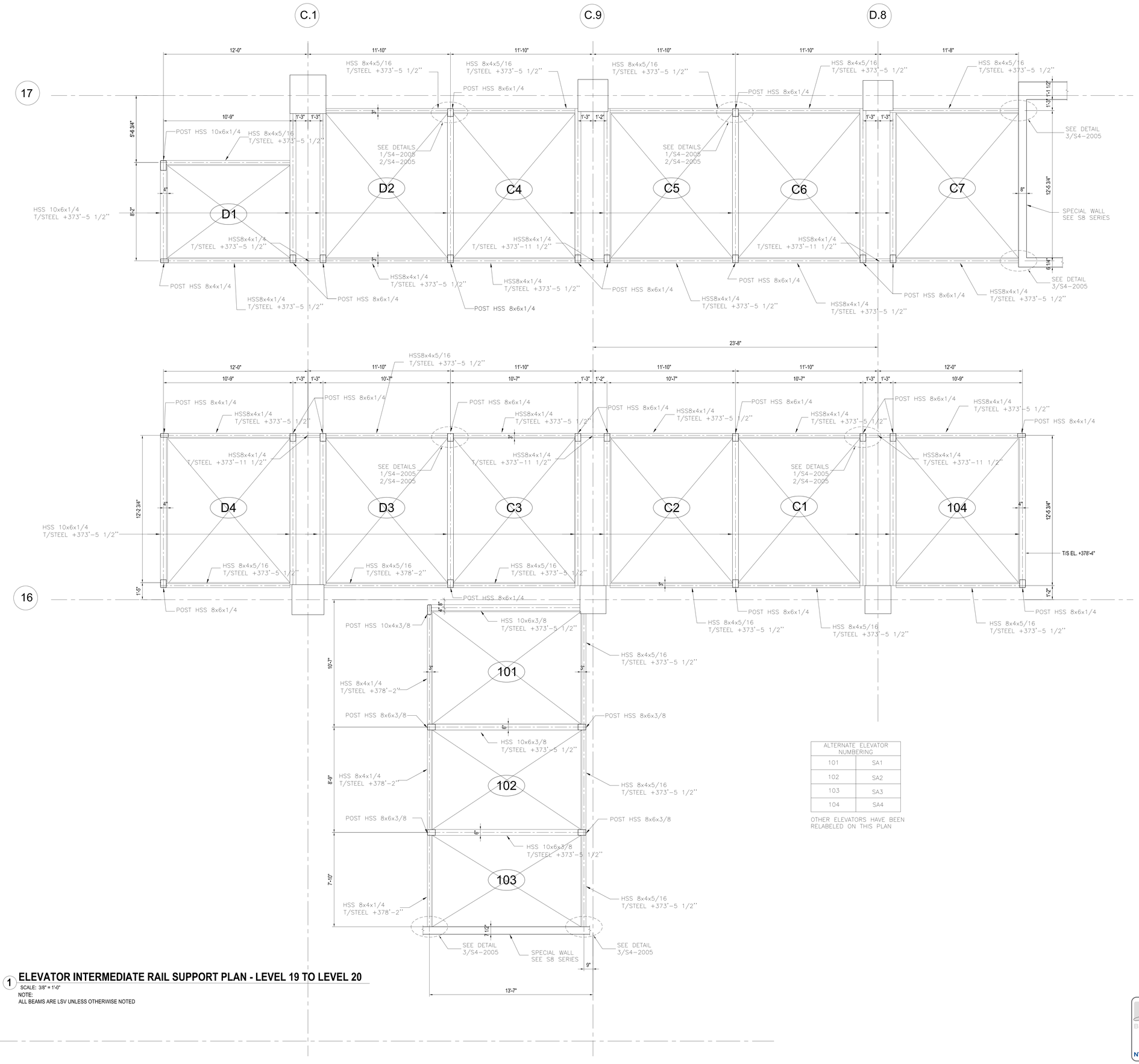

ALTERNATE ELEVATOR NUMBERING	
101	SA1
102	SA2
103	SA3
104	SA4

OTHER ELEVATORS HAVE BEEN RELABELED ON THIS PLAN

1 ELEVATOR INTERMEDIATE RAIL SUPPORT PLAN - LEVEL 19 TO LEVEL 20

SCALE: 3/8" = 1'-0"

NOTE:
ALL BEAMS ARE LSV UNLESS OTHERWISE NOTED

HUDSON YARDS - RETAIL PODIUM AND TOWER A

500 WEST 33RD STREET
New York, NY

Client
Related Companies
60 Columbus Circle
New York, NY 10023
TEL: 212.801.1000 FAX: 212.801.1048

Oxford Properties Group
320 Park Avenue, 17th Floor
New York, NY 10022
TEL: 212.986.7514 FAX: 212.986.7510

Architect
Kohn Pedersen Fox Associates
11 West 42nd Street
New York, New York 10036
TEL: 212.977.6500 FAX: 212.956.2526

Structural Engineer
Thornton Tomasetti, Inc.
51 Madison Avenue
New York, New York 10010
TEL: 917.661.7800 FAX: 718.661.7801

Mechanical, Electrical, Plumbing, Fire Protection
Jaros Baum & Bolles Consulting Engineers
80 Pine Street
New York, NY 10013
TEL: 212.530.9300 FAX: 212.269.5894

Retail Interior Design & Planning
Elkus-Manfredi
300 A Street
Boston, MA 02210
TEL: 617.426.1300

No.	Description	Date
1	D.O.B. AMENDMENT #2	10/15/2016

Key Plan

Issue Date: 10/15/2016
Project No. N11328.00
Drawn By: Author
Sheet Number

Damian Titus
Buildings
APPROVED
Under Directive 2 of 1975
AMENDED/CORRECTION
Date: 09/9/2017
NYC Development Hub

Drawing Title
TOWER A ELEVATOR INTERMEDIATE SUPPORT PART PLANS XXXII

Drawing Number
S3-6132
B-Scan Drawing Number

S-539.00 SHEET 309 OF 443

THE INFORMATION CONTAINED IN THIS DRAWING IS THE PROPERTY OF THE ARCHITECT

DEPT OF BLDGS 421195255 Job Number
B3808R72825 Scan Code

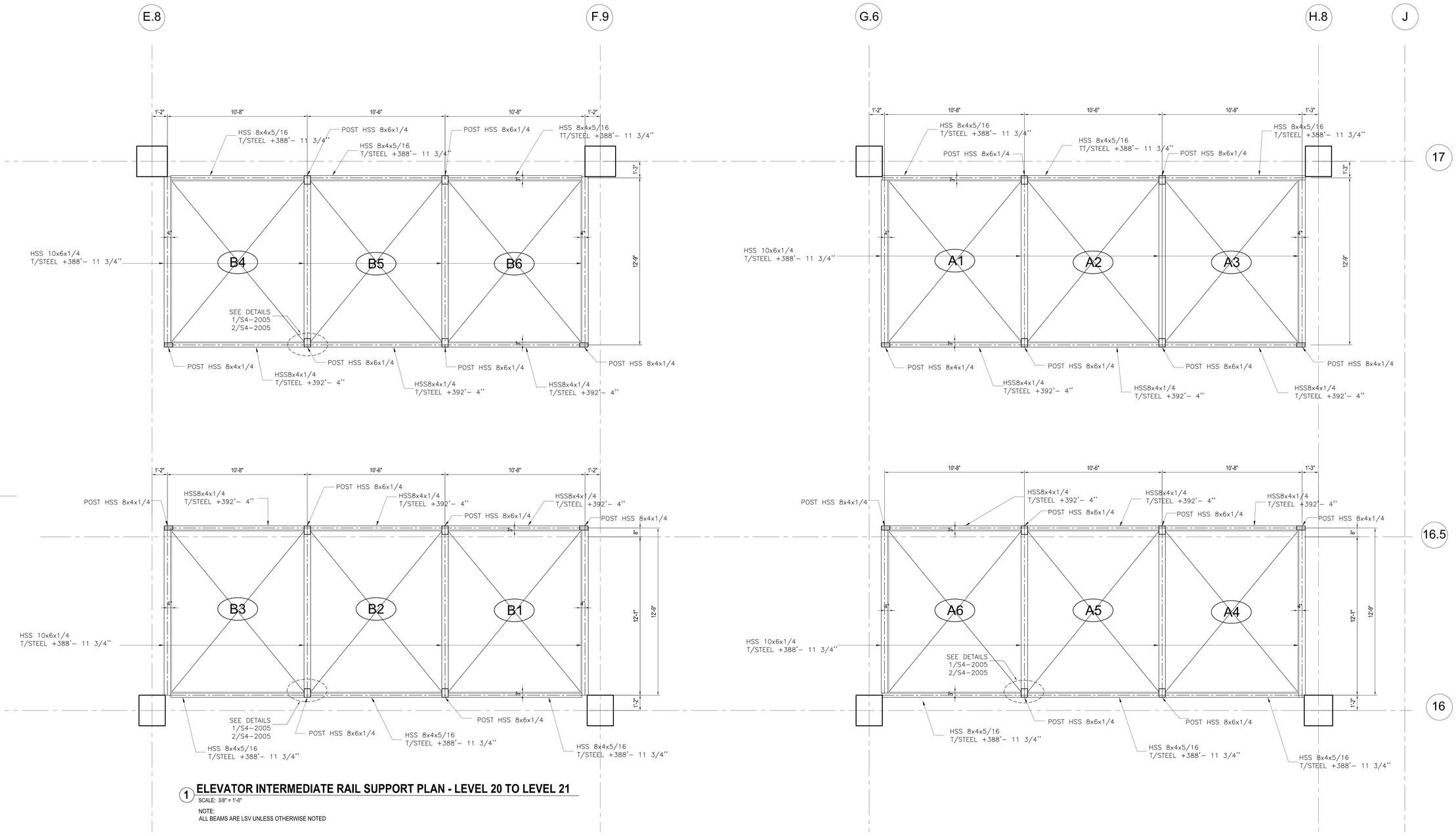

1 ELEVATOR INTERMEDIATE RAIL SUPPORT PLAN - LEVEL 20 TO LEVEL 21

SCALE: 3/8" = 1'-0"

NOTE:
ALL BEAMS ARE LSV UNLESS OTHERWISE NOTED

HUDSON YARDS - RETAIL PODIUM AND TOWER A

500 WEST 33RD STREET
New York, NY

Client
Related Companies
60 Columbus Circle
New York, NY 10023
TEL: 212.801.1000 FAX: 212.801.1048

Oxford Properties Group
320 Park Avenue, 17th Floor
New York, NY 10022
TEL: 212.986.7514 FAX: 212.986.7510

Architect
Kohn Pedersen Fox Associates
11 West 42nd Street
New York, New York 10036
TEL: 212.977.6500 FAX: 212.956.2526

Structural Engineer
Thornton Tomasetti, Inc.
51 Madison Avenue
New York, New York 10010
TEL: 917.661.7800 FAX: 718.661.7801

Mechanical, Electrical, Plumbing, Fire Protection
Jaros Baum & Bolles Consulting Engineers
80 Pine Street
New York, NY 10013
TEL: 212.530.9300 FAX: 212.269.5894

Retail Interior Design & Planning
Elkus-Manfredi
300 A Street
Boston, MA 02210
TEL: 617.426.1300

No.	Description	Date
1	D.O.B. AMENDMENT #2	10/15/2016

Key Plan

Issue Date: 10/15/2016
Project No. N11328.00
Drawn By: Author
Sheet Number

Damian Titus
Buildings
APPROVED
Under Directive 2 of 1975
AMENDED APPLICATION
Date: 05/01/2017
NYC Development Hub

Drawing Title
TOWER A ELEVATOR INTERMEDIATE SUPPORT PART PLANS XXXIII

Drawing Number
S3-6133
If Sheet Drawing Number
S-540.00 SHEET 310 OF 443

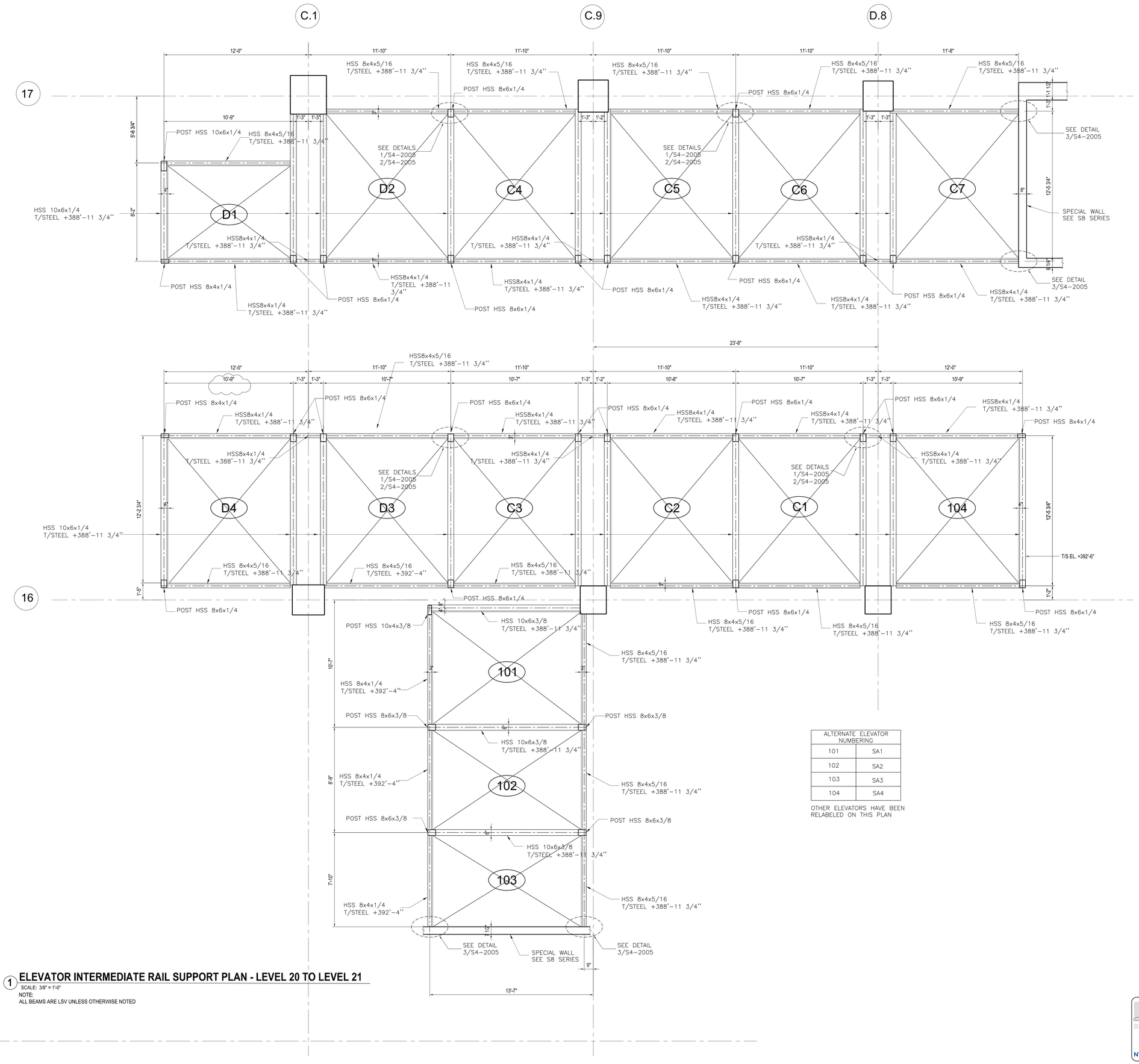

ALTERNATE ELEVATOR NUMBERING	
101	SA1
102	SA2
103	SA3
104	SA4

OTHER ELEVATORS HAVE BEEN RELABELED ON THIS PLAN

1 **ELEVATOR INTERMEDIATE RAIL SUPPORT PLAN - LEVEL 20 TO LEVEL 21**

SCALE: 3/8" = 1'-0"

NOTE:
ALL BEAMS ARE LSV UNLESS OTHERWISE NOTED

HUDSON YARDS - RETAIL PODIUM AND TOWER A

500 WEST 33RD STREET
New York, NY

Client
Related Companies
60 Columbus Circle
New York, NY 10023
TEL: 212.801.1000 FAX: 212.801.1048

Oxford Properties Group
320 Park Avenue, 17th Floor
New York, NY 10022
TEL: 212.986.7514 FAX: 212.986.7510

Architect
Kohn Pedersen Fox Associates
11 West 42nd Street
New York, New York 10036
TEL: 212.977.6500 FAX: 212.956.2526

Structural Engineer
Thornton Tomasetti, Inc.
51 Madison Avenue
New York, New York 10010
TEL: 917.661.7800 FAX: 718.661.7801

Mechanical, Electrical, Plumbing, Fire Protection
Jaros Baum & Bolles Consulting Engineers
80 Pine Street
New York, NY 10013
TEL: 212.530.9300 FAX: 212.269.5894

Retail Interior Design & Planning
Elkus-Manfredi
300 A Street
Boston, MA 02210
TEL: 617.426.1300

No.	Description	Date
1	D.O.B. AMENDMENT #2	10/15/2016

Key Plan

Issue Date: 10/15/2016
Project No. N11328.00
Drawn By: Author
Sheet Number

Damian Titus
Buildings
APPROVED
Under Directive 2 of 1975
AMENDED APPLICATION
Date: 05/03/2017
NYC Development Hub

Drawing Title
TOWER A ELEVATOR INTERMEDIATE SUPPORT PART PLANS XXXIV

Drawing Number
S3-6134
B-Scan Drawing Number
S-541.00

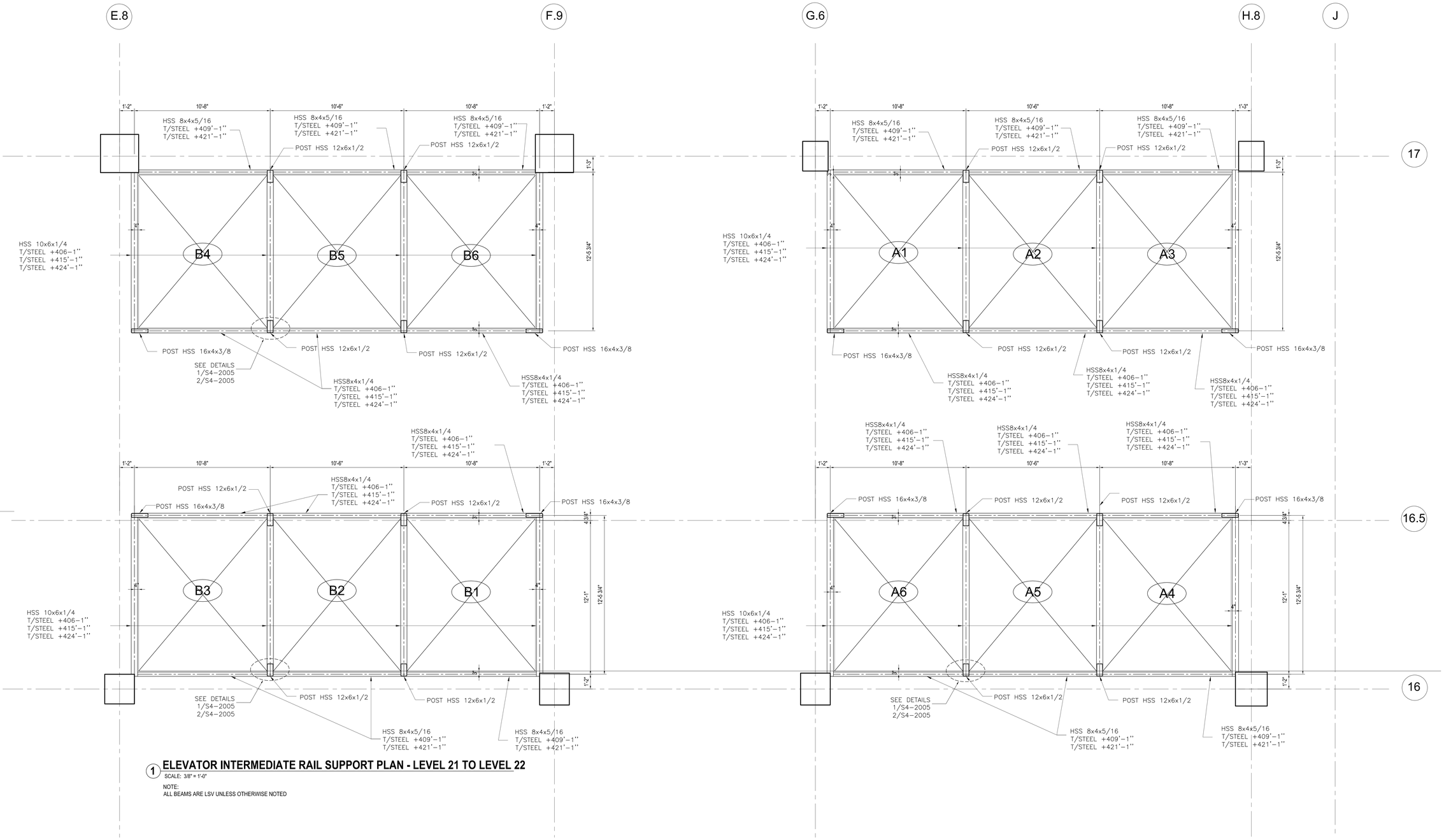

1 **ELEVATOR INTERMEDIATE RAIL SUPPORT PLAN - LEVEL 21 TO LEVEL 22**

SCALE: 3/8" = 1'-0"

NOTE:
ALL BEAMS ARE LSV UNLESS OTHERWISE NOTED

HUDSON YARDS - RETAIL PODIUM AND TOWER A

500 WEST 33RD STREET
New York, NY

Client
Related Companies
60 Columbus Circle
New York, NY 10023
TEL: 212.801.1000 FAX: 212.801.1048

Oxford Properties Group
320 Park Avenue, 17th Floor
New York, NY 10022
TEL: 212.986.7514 FAX: 212.986.7510

Architect
Kohn Pedersen Fox Associates
11 West 42nd Street
New York, New York 10036
TEL: 212.977.6500 FAX: 212.956.2526

Structural Engineer
Thornton Tomasetti, Inc.
51 Madison Avenue
New York, New York 10010
TEL: 917.661.7800 FAX: 718.661.7801

Mechanical, Electrical, Plumbing, Fire Protection
Jaros Baum & Bolles Consulting Engineers
80 Pine Street
New York, NY 10013
TEL: 212.530.9300 FAX: 212.269.5894

Retail Interior Design & Planning
Elkus-Manfredi
300 A Street
Boston, MA 02210
TEL: 617.426.1300

No.	Description	Date
1	D.O.B. AMENDMENT #2	10/15/2016

Key Plan

Issue Date: 10/15/2016
Project No. N11328.00
Drawn By: Author
Sheet Number

Damian Titus
Buildings
APPROVED
Under Directive 2 of 1975
AMENDED APPLICATION
Date: 05/03/2017
NYC Development Hub

Drawing Title
TOWER A ELEVATOR INTERMEDIATE SUPPORT PART PLANS XXXV

Drawing Number
S3-6135
B-Scan Drawing Number
S-542.00

© 2015 KOHN PEDERSEN FOX ASSOCIATES PC All rights reserved

DEPT OF BLDGS 421395255 Job Number
E3404963140 Scan Code

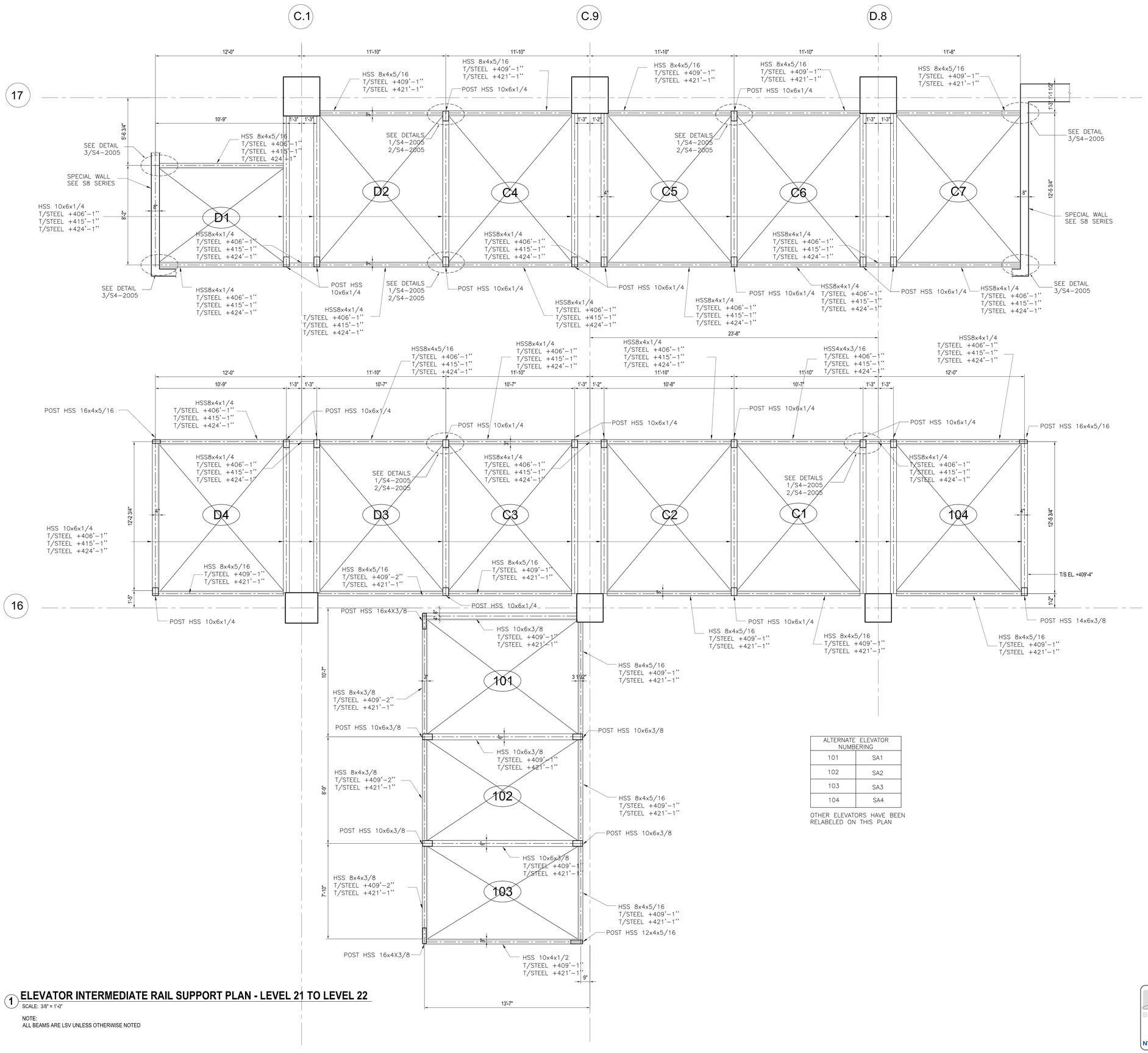

ALTERNATE ELEVATOR NUMBERING	
101	SA1
102	SA2
103	SA3
104	SA4

OTHER ELEVATORS HAVE BEEN RELABELED ON THIS PLAN

1 ELEVATOR INTERMEDIATE RAIL SUPPORT PLAN - LEVEL 21 TO LEVEL 22

SCALE: 3/8" = 1'-0"

NOTE:
ALL BEAMS ARE LSV UNLESS OTHERWISE NOTED

HUDSON YARDS - RETAIL PODIUM AND TOWER A

500 WEST 33RD STREET
New York, NY

Client
Related Companies
60 Columbus Circle
New York, NY 10023
TEL: 212.801.1000 FAX: 212.801.1048

Oxford Properties Group
320 Park Avenue, 17th Floor
New York, NY 10022
TEL: 212.986.7514 FAX: 212.986.7510

Architect
Kohn Pedersen Fox Associates
11 West 42nd Street
New York, New York 10036
TEL: 212.977.6500 FAX: 212.956.2526

Structural Engineer
Thornton Tomasetti, Inc.
51 Madison Avenue
New York, New York 10010
TEL: 917.661.7800 FAX: 718.661.7801

Mechanical, Electrical, Plumbing, Fire Protection
Jaros Baum & Bolles Consulting Engineers
80 Pine Street
New York, NY 10013
TEL: 212.530.9300 FAX: 212.269.5894

Retail Interior Design & Planning
Elkus-Manfredi
300 A Street
Boston, MA 02210
TEL: 617.426.1300

No.	Description	Date
1	D.O.B. AMENDMENT #2	10/15/2016

Key Plan

Issue Date: 10/15/2016
Project No. N11328.00
Drawn By Author
Sheet Number

Damian Titus
Buildings
APPROVED
Under Directive 2 of 1975
MUNICIPAL REGULATION
Date: 05/03/2017
NYC Development Hub

Drawing Title
TOWER A ELEVATOR INTERMEDIATE SUPPORT PART PLANS XXXVI

Drawing Number
S3-6136
B-Scan Drawing Number

S-543.00 SHEET 313 OF 443

ALL RIGHTS RESERVED UNDER INTERNATIONAL COPYRIGHT LAWS

DEPT OF BLDGS 421185255 Job Number
E3435D623B Scan Code

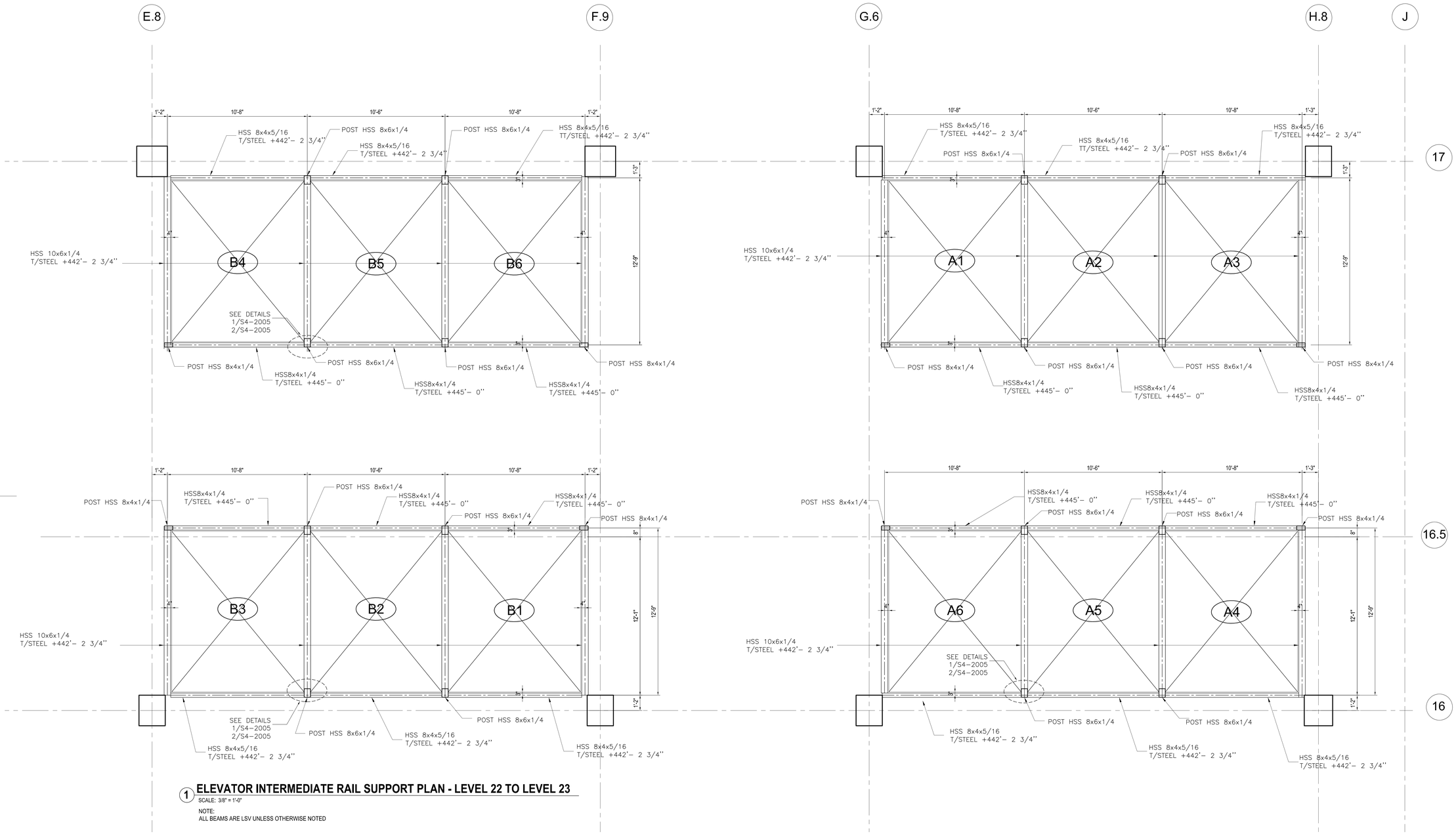

1 **ELEVATOR INTERMEDIATE RAIL SUPPORT PLAN - LEVEL 22 TO LEVEL 23**

SCALE: 3/8" = 1'-0"

NOTE:
ALL BEAMS ARE LSV UNLESS OTHERWISE NOTED

HUDSON YARDS - RETAIL PODIUM AND TOWER A

500 WEST 33RD STREET
New York, NY

Client
Related Companies
60 Columbus Circle
New York, NY 10023
TEL: 212.801.1000 FAX: 212.801.1048

Oxford Properties Group
320 Park Avenue, 17th Floor
New York, NY 10022
TEL: 212.986.7514 FAX: 212.986.7510

Architect
Kohn Pedersen Fox Associates
11 West 42nd Street
New York, New York 10036
TEL: 212.977.6500 FAX: 212.956.2526

Structural Engineer
Thornton Tomasetti, Inc.
51 Madison Avenue
New York, New York 10010
TEL: 917.661.7800 FAX: 718.661.7801

Mechanical, Electrical, Plumbing, Fire Protection
Jaros Baum & Bolles Consulting Engineers
80 Pine Street
New York, NY 10013
TEL: 212.530.9300 FAX: 212.269.5894

Retail Interior Design & Planning
Elkus-Manfredi
300 A Street
Boston, MA 02210
TEL: 617.426.1300

No.	Description	Date
1	D.O.B. AMENDMENT #2	10/15/2016

Key Plan

Issue Date: 10/15/2016
Project No. N11328.00
Drawn By: Author
Sheet Number

Damian Titus
Buildings
APPROVED
Under Directive 2 of 1975
AMENDED APPLICATION
Date: 05/03/2017
NYC Development Hub

Drawing Title
TOWER A ELEVATOR INTERMEDIATE SUPPORT PART PLANS XXXVII

Drawing Number
S3-6137
If Scan Drawing Number
S-544.00

DEPT OF BLDGS 421195255 Job Number
ES3785991E Scan Code

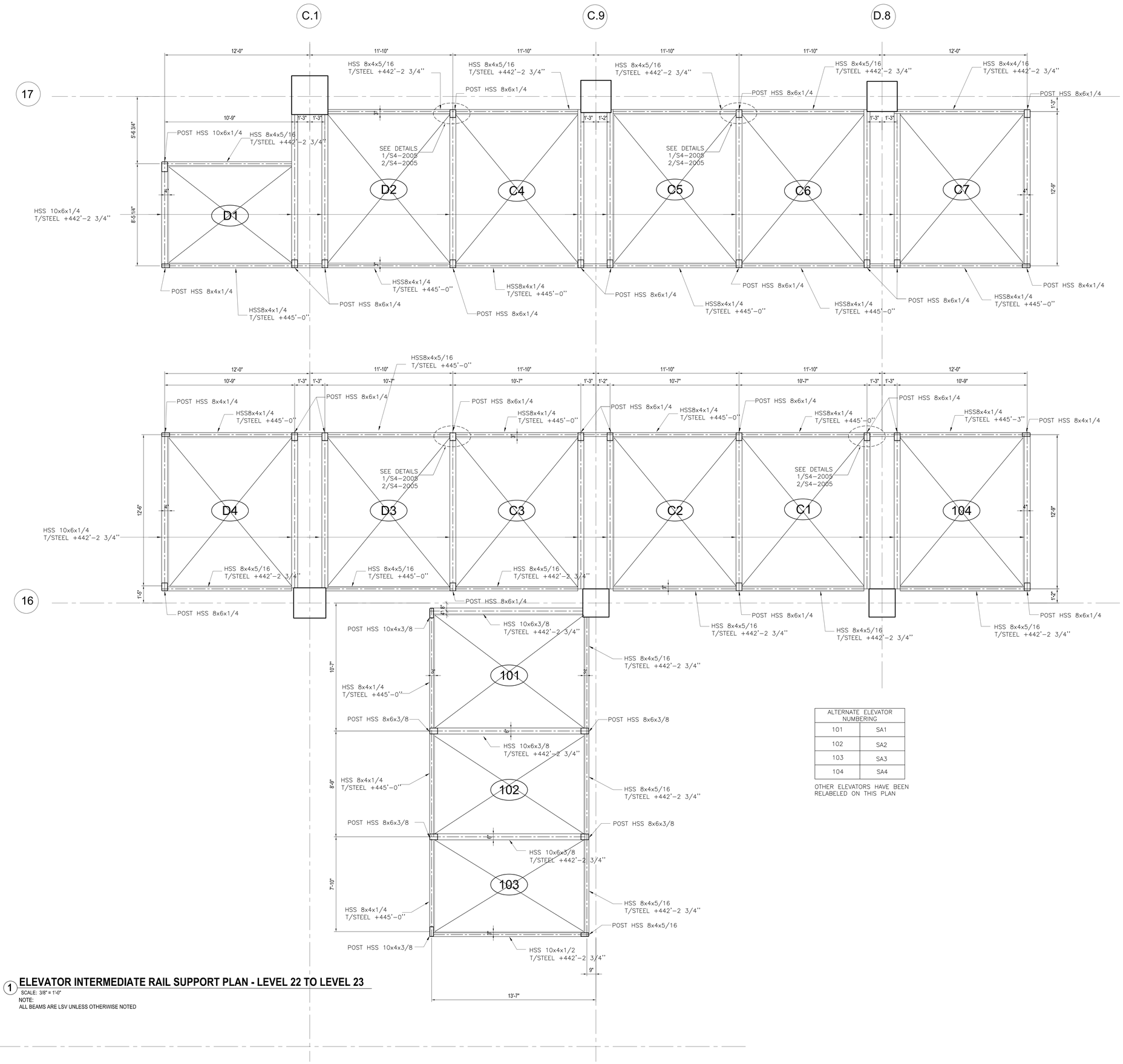

ALTERNATE ELEVATOR NUMBERING	
101	SA1
102	SA2
103	SA3
104	SA4

OTHER ELEVATORS HAVE BEEN RELABELED ON THIS PLAN

1 ELEVATOR INTERMEDIATE RAIL SUPPORT PLAN - LEVEL 22 TO LEVEL 23

SCALE: 3/8" = 1'-0"

NOTE:
ALL BEAMS ARE LSV UNLESS OTHERWISE NOTED

HUDSON YARDS - RETAIL PODIUM AND TOWER A

500 WEST 33RD STREET
New York, NY

Client
Related Companies
60 Columbus Circle
New York, NY 10023
TEL: 212.801.1000 FAX: 212.801.1048

Oxford Properties Group
320 Park Avenue, 17th Floor
New York, NY 10022
TEL: 212.986.7514 FAX: 212.986.7510

Architect
Kohn Pedersen Fox Associates
11 West 42nd Street
New York, New York 10036
TEL: 212.977.6500 FAX: 212.956.2526

Structural Engineer
Thornton Tomasetti, Inc.
51 Madison Avenue
New York, New York 10010
TEL: 917.661.7800 FAX: 718.661.7801

Mechanical, Electrical, Plumbing, Fire Protection
Jaros Baum & Bolles Consulting Engineers
80 Pine Street
New York, NY 10013
TEL: 212.530.9300 FAX: 212.269.5894

Retail Interior Design & Planning
Elkus-Manfredi
300 A Street
Boston, MA 02210
TEL: 617.426.1300

No.	Description	Date
1	D.O.B. AMENDMENT #2	10/15/2016

Key Plan

Issue Date: 10/15/2016
Project No. N11328.00
Drawn By Author
Sheet Number

Damian Titus
Buildings
APPROVED
Under Directive 1 of 1975
AMENDED APPLICATION
Date: 05/03/2017
NYC Development Hub

Drawing Title
TOWER A ELEVATOR INTERMEDIATE SUPPORT PART PLANS XXXVIII

Drawing Number
S3-6138
BCAM Drawing Number
S-545.00 SHEET 315 OF 443

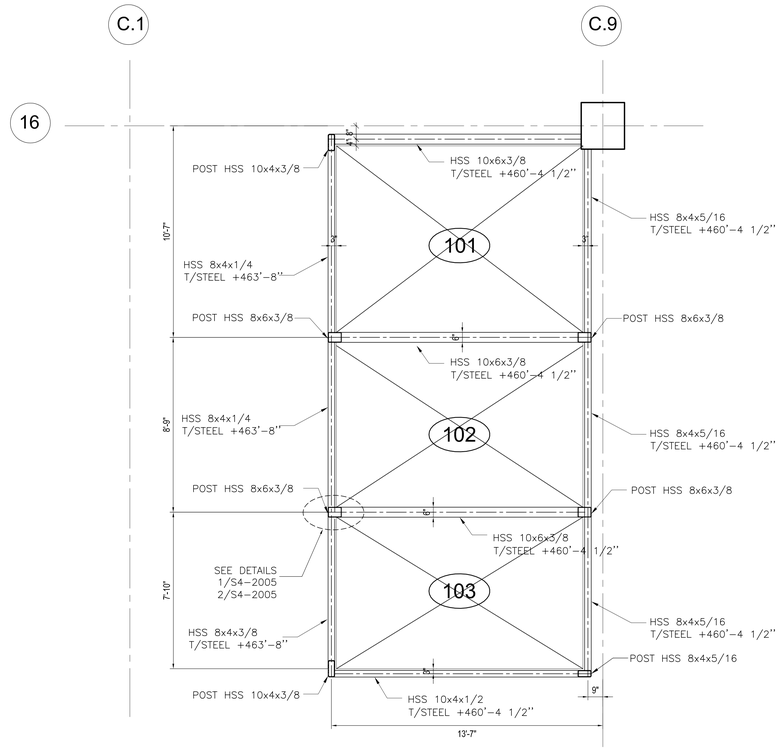

1 ELEVATOR INTERMEDIATE RAIL SUPPORT PLAN - LEVEL 23 TO LEVEL 24

SCALE: 3/8" = 1'-0"
NOTE:
ALL BEAMS ARE LSV UNLESS OTHERWISE NOTED

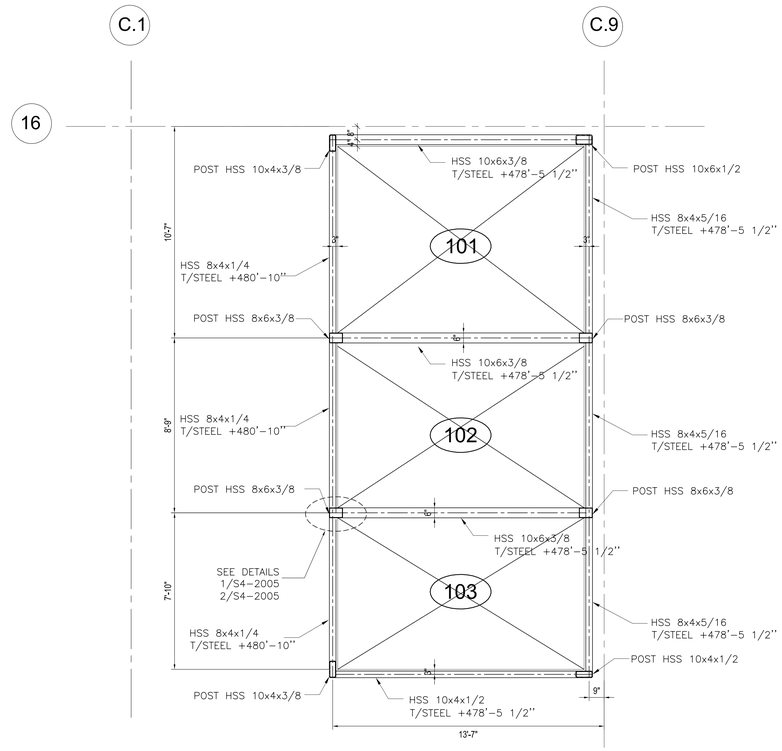

2 ELEVATOR INTERMEDIATE RAIL SUPPORT PLAN - LEVEL 24 TO LEVEL 25

SCALE: 3/8" = 1'-0"
NOTE:
ALL BEAMS ARE LSV UNLESS OTHERWISE NOTED

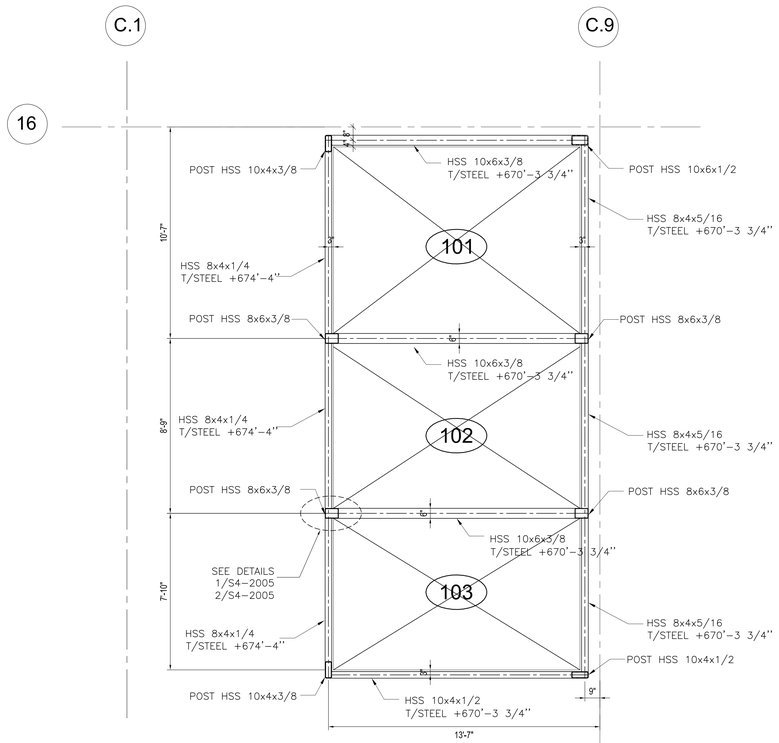

3 ELEVATOR INTERMEDIATE RAIL SUPPORT PLAN - LEVEL 38 TO LEVEL 39

SCALE: 3/8" = 1'-0"
NOTE:
ALL BEAMS ARE LSV UNLESS OTHERWISE NOTED

ALTERNATE ELEVATOR NUMBERING	
101	SA1
102	SA2
103	SA3
104	SA4

OTHER ELEVATORS HAVE BEEN RELABELED ON THIS PLAN

HUDSON YARDS - RETAIL PODIUM AND TOWER A
500 WEST 33RD STREET
New York, NY

Client
Related Companies
60 Columbus Circle
New York, NY 10023
TEL: 212.801.1000 FAX: 212.801.1048

Oxford Properties Group
320 Park Avenue, 17th Floor
New York, NY 10022
TEL: 212.986.7514 FAX: 212.986.7510

Architect
Kohn Pedersen Fox Associates
11 West 42nd Street
New York, New York 10036
TEL: 212.977.6500 FAX: 212.956.2526

Structural Engineer
Thornton Tomasetti, Inc.
51 Madison Avenue
New York, New York 10010
TEL: 917.661.7800 FAX: 718.661.7801

Mechanical, Electrical, Plumbing, Fire Protection
Jaros Baum & Bolles Consulting Engineers
80 Pine Street
New York, NY 10013
TEL: 212.530.9300 FAX: 212.269.5894

Retail Interior Design & Planning
Elkus-Manfredi
300 A Street
Boston, MA 02210
TEL: 617.426.1300

No.	Description	Date
1	D.O.B. AMENDMENT #2	10/15/2016

Key Plan

Issue Date: 10/15/2016
Project No. N11328.00
Drawn By Author
Sheet Number

Damian Titus
Buildings
APPROVED
Under Directive 2 of 1975
AMENDED APPLICATION
Date: 05/01/2017
NYC Development Hub

TOWER A ELEVATOR INTERMEDIATE SUPPORT PART PLANS XXXIX

Drawing Number
S3-6139
B-Scan Drawing Number

S-546.00 SHEET 316 OF 443

DEPT OF BLDGS 421395255 Job Number
B00606810SI Scan Code

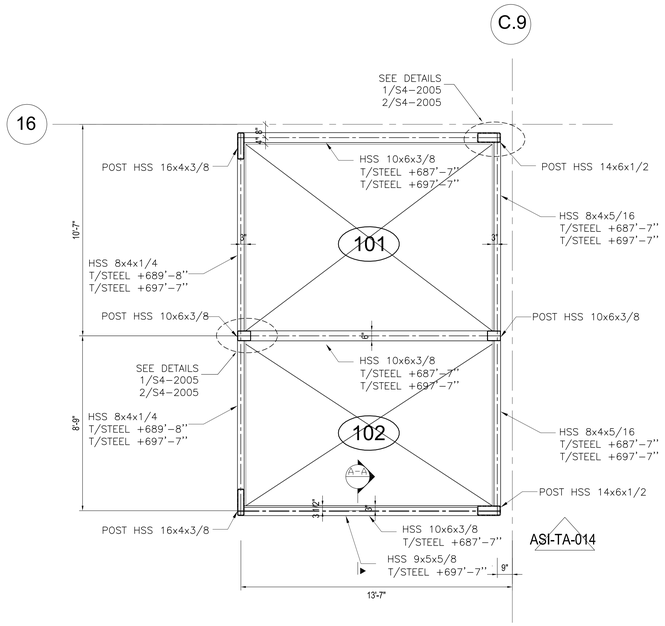

1 ELEVATOR INTERMEDIATE RAIL SUPPORT PLAN - LEVEL 39 TO LEVEL 40

SCALE: 3/8" = 1'-0"

NOTE:
ALL BEAMS ARE LSV UNLESS OTHERWISE NOTED

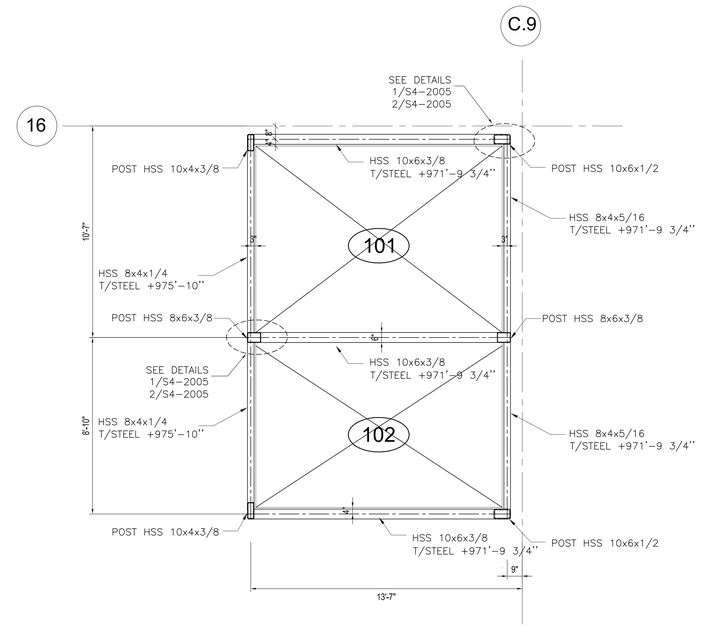

2 ELEVATOR INTERMEDIATE RAIL SUPPORT PLAN - LEVEL 59 TO LEVEL 60

SCALE: 3/8" = 1'-0"

NOTE:
ALL BEAMS ARE LSV UNLESS OTHERWISE NOTED

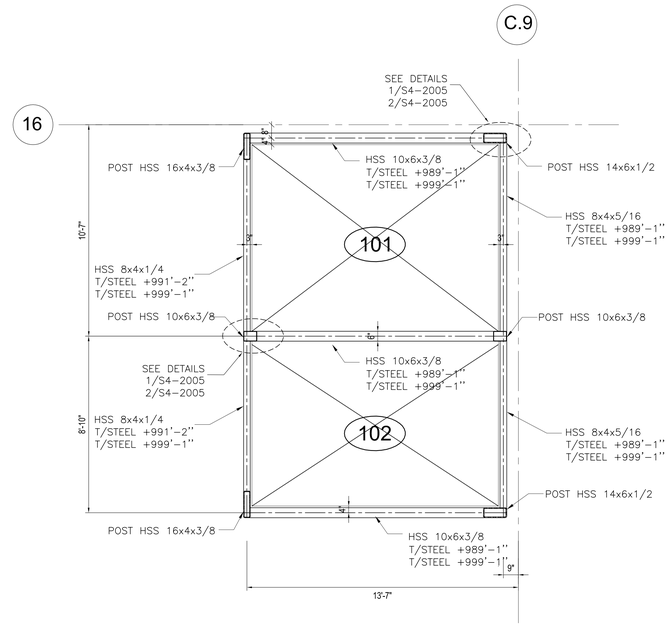

3 ELEVATOR INTERMEDIATE RAIL SUPPORT PLAN - LEVEL 60 TO LEVEL 61

SCALE: 3/8" = 1'-0"

NOTE:
ALL BEAMS ARE LSV UNLESS OTHERWISE NOTED

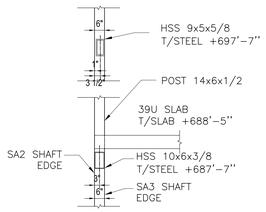

7 SECTION A-A

SCALE: 3/8" = 1'-0"

ALTERNATE ELEVATOR NUMBERING	
101	SA1
102	SA2
103	SA3
104	SA4

OTHER ELEVATORS HAVE BEEN RELABELED ON THIS PLAN

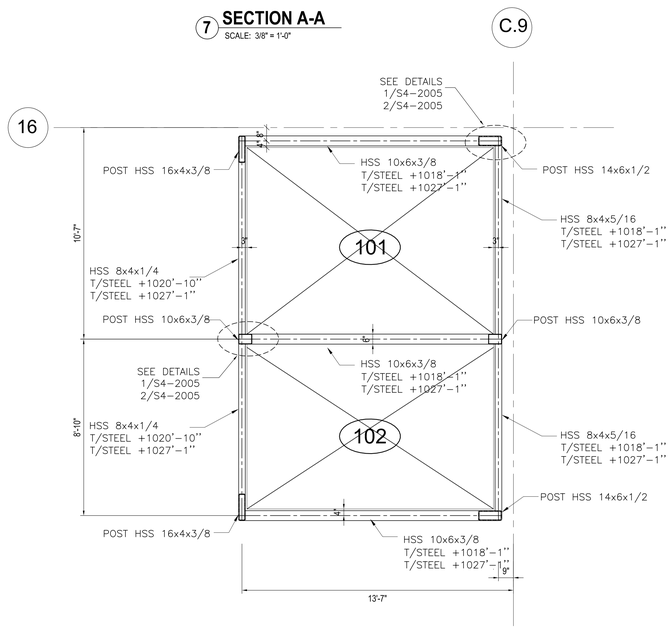

4 ELEVATOR INTERMEDIATE RAIL SUPPORT PLAN - LEVEL 61 TO LEVEL 62

SCALE: 3/8" = 1'-0"

NOTE:
ALL BEAMS ARE LSV UNLESS OTHERWISE NOTED

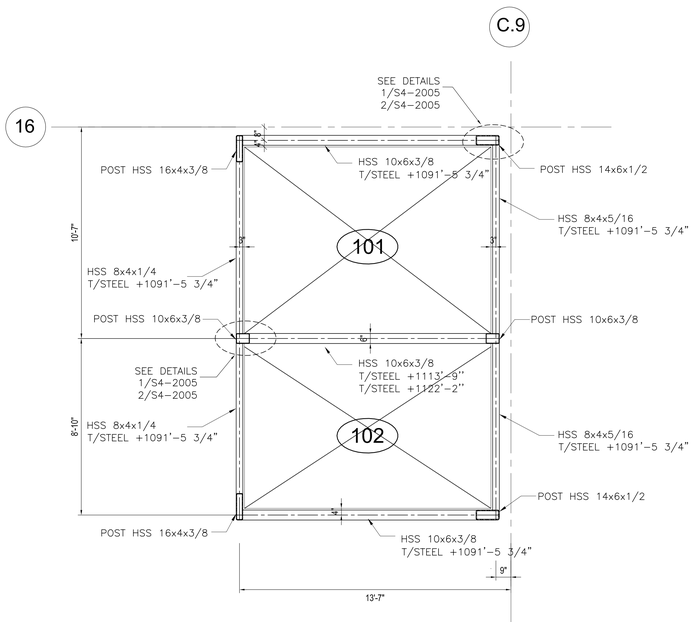

5 ELEVATOR INTERMEDIATE RAIL SUPPORT PLAN - LEVEL 65 TO LEVEL 66

SCALE: 3/8" = 1'-0"

NOTE:
ALL BEAMS ARE LSV UNLESS OTHERWISE NOTED

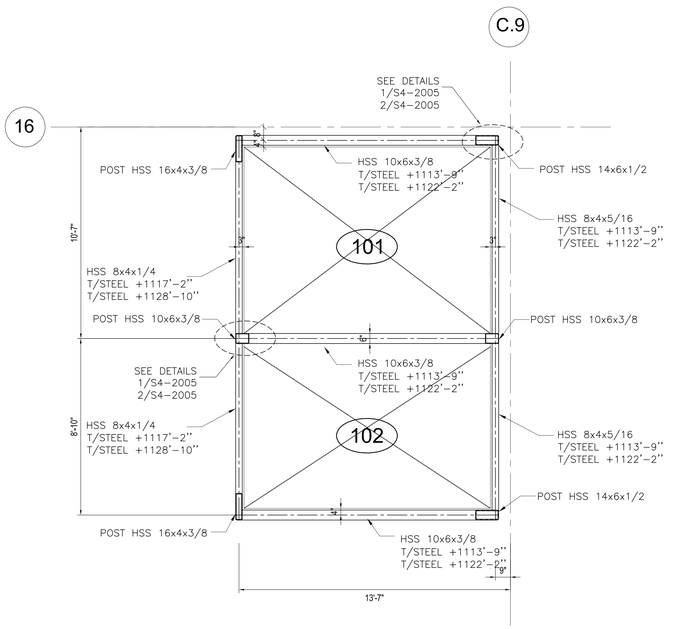

6 ELEVATOR INTERMEDIATE RAIL SUPPORT PLAN - LEVEL 66 TO LEVEL 67

SCALE: 3/8" = 1'-0"

NOTE:
ALL BEAMS ARE LSV UNLESS OTHERWISE NOTED

Damian Titus
APPROVED
Under Directive 2 of 1975
AMENDED APPLICATION
Date: 05/03/2017
NYC Development Hub

HUDSON YARDS - RETAIL PODIUM AND TOWER A

500 WEST 33RD STREET
New York, NY

Client
Related Companies
60 Columbus Circle
New York, NY 10023
TEL: 212.801.1000 FAX: 212.801.1048

Oxford Properties Group
320 Park Avenue, 17th Floor
New York, NY 10022
TEL: 212.986.7514 FAX: 212.986.7510

Architect
Kohn Pedersen Fox Associates
11 West 42nd Street
New York, New York 10036
TEL: 212.977.6500 FAX: 212.956.2526

Structural Engineer
Thornton Tomasetti, Inc.
51 Madison Avenue
New York, New York 10010
TEL: 917.661.7800 FAX: 718.661.7801

Mechanical, Electrical, Plumbing, Fire Protection
Jaros Baum & Bolles Consulting Engineers
80 Pine Street
New York, NY 10013
TEL: 212.530.9300 FAX: 212.269.5894

Retail Interior Design & Planning
Elkus-Manfredi
300 A Street
Boston, MA 02210
TEL: 617.426.1300

No.	Description	Date
1	D.O.B. AMENDMENT #2	10/15/2016

Key Plan

Issue Date: 10/15/2016
Project No. N11328.00
Drawn By Author
Sheet Number

STATE OF NEW YORK — DAMIAN TITUS — 032442 — LICENSED PROFESSIONAL ENGINEER

Drawing Title
TOWER A ELEVATOR INTERMEDIATE SUPPORT PART PLANS XXXX

Drawing Number
S3-6140
Work Drawing Number
S-547.00 SHEET 317 OF 443

SHIFT OF BLOCK 671.00025 Job Number
ES#M063099 Scan Code

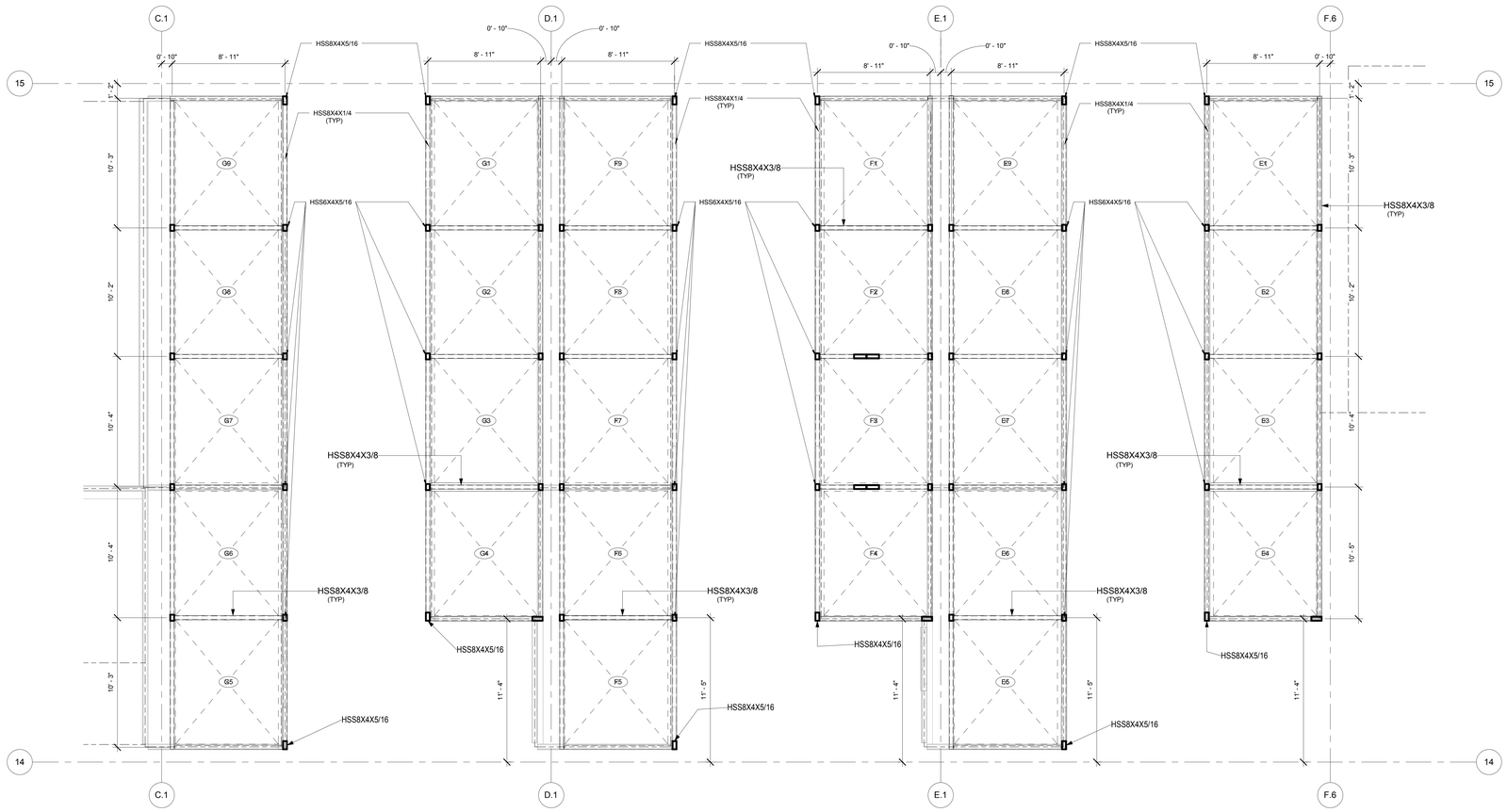

1 ELEVATOR INTERMEDIATE RAIL SUPPORT PLAN
SCALE: 1/4" = 1'-0"

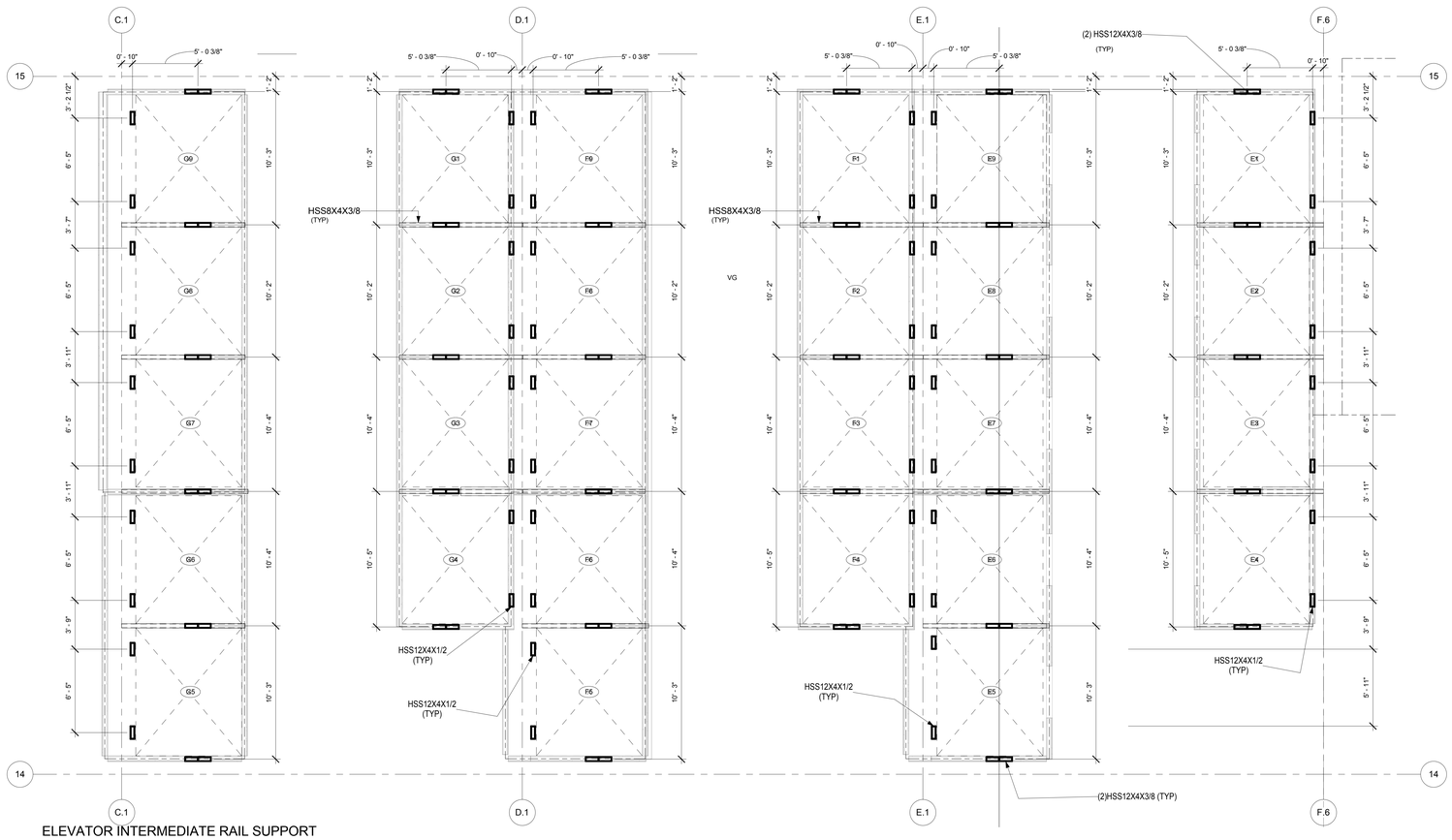

2 ELEVATOR INTERMEDIATE RAIL SUPPORT PLAN.
SCALE: 1/4" = 1'-0"

ELEVATOR CAGES FOR LEVELS:

21 TO 22
39 TO 40 (F AND G BANKS)

NOTE: ALL DIMENSIONS TO BE CONFIRMED BY ARCHITECT AND ELEVATOR MANUFACTURER

ELEVATION FOR HORIZONTAL HSS:

LEVEL 21 TO 22
409'-1"
421'-1"

LEVEL 39 TO 40
687'-7"
697'-7"

ELEVATOR POSTS FOR LEVELS:

22 TO 23
23 TO 24
24 TO 25
38 TO 39
59 TO 60 (FOR G BANK ONLY)
60 TO 61 (FOR G BANK ONLY)
64 TO 65 (G1, G2, G8, & G9)
65 TO 66 (G1, G2, G8, & G9)

NOTE: ALL DIMENSIONS TO BE CONFIRMED BY ARCHITECT AND ELEVATOR MANUFACTURER

HUDSON YARDS - RETAIL PODIUM AND TOWER A

500 WEST 33RD STREET
New York, NY

Client
Related Companies
60 Columbus Circle
New York, NY 10023
TEL: 212.801.1000 FAX: 212.801.1048

Oxford Properties Group
320 Park Avenue, 17th Floor
New York, NY 10022
TEL: 212.986.7514 FAX: 212.986.7510

Architect
Kohn Pedersen Fox Associates
11 West 42nd Street
New York, New York 10036
TEL: 212.977.6500 FAX: 212.956.2526

Structural Engineer
Thornton Tomasetti, Inc.
51 Madison Avenue
New York, New York 10010
TEL: 917.661.7800 FAX: 718.661.7801

Mechanical, Electrical, Plumbing, Fire Protection
Jaros Baum & Bolles Consulting Engineers
80 Pine Street
New York, NY 10013
TEL: 212.530.9300 FAX: 212.269.5894

Retail Interior Design & Planning
Elkus-Manfredi
300 A Street
Boston, MA 02210
TEL: 617.426.1300

No.	Description	Date
1	D.O.B. AMENDMENT #2	10/15/2016

Key Plan

09 06 03
08 05 02
07 04 01

Issue Date: 10/15/2016
Project No. N11328.00
Drawn By Author
Sheet Number

HYE -TA -S3-6141
Drawing Title

TOWER A INTERMEDIATE ELEVATOR SUPPORT PART PLANS

Drawing Number
S3-6141
B-Scan Drawing Number
S-548.00

SHEET 318 OF 443

Damian Titus
Buildings
APPROVED
Under Directive 2 of 1975
AMENDED APPLICATION
Date: 05/01/2017
NYC Development Hub

0 4' 8' 16'

© 2016 KOHN PEDERSEN FOX ASSOCIATES PC. All rights reserved.

S3-6141
10/17/2016 11:51:51 AM
TOWER A INTERMEDIATE ELEVATOR SUPPORT PART
PLANS Projects\N11328.00\Drawings\Structural\Revit Issued\2016-10-16 - D.O.B. Amendment No.2\Revit - Rev. Removed\HYTA ELEVATOR INTERMEDIATE SUPPORTS.rvt

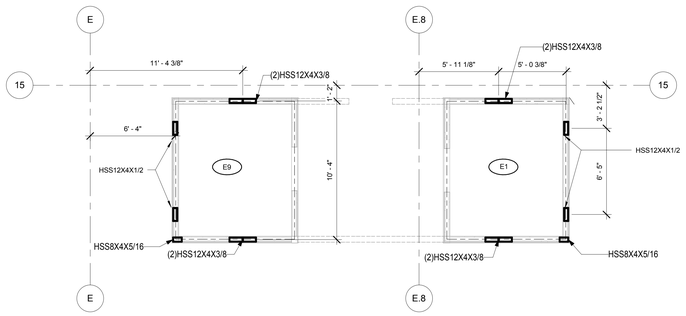

ELEVATOR INTERMEDIATE RAIL SUPPORT
PLAN LEVEL-19 ELEVATOR E9 AMD E1

2 SCALE: 1/4" = 1'-0"

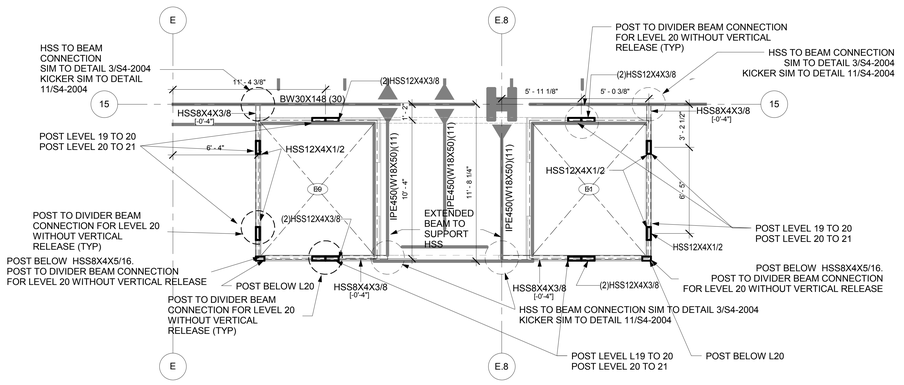

ELEVATOR INTERMEDIATE RAIL SUPPORT
PLAN LEVEL-20 ELEVATOR E9 AND E1

1 SCALE: 1/4" = 1'-0"

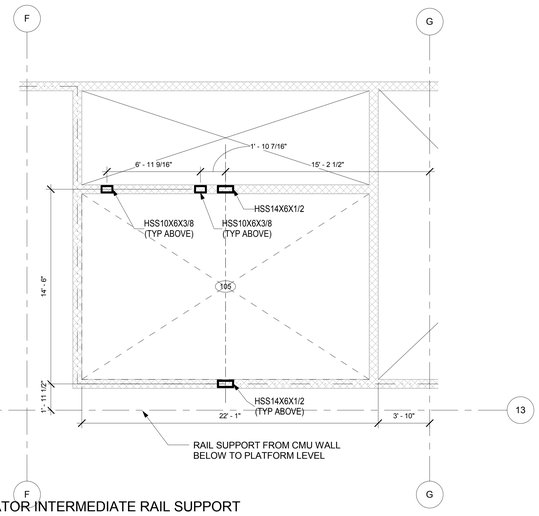

ELEVATOR INTERMEDIATE RAIL SUPPORT
PLAN ELEVATOR 105 (SB1)

3 SCALE: 1/4" = 1'-0"

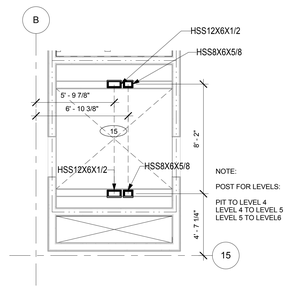

ELEVATOR INTERMEDIATE RAIL SUPPORT
PLAN LEVEL 4 ELEVATOR 15 (AY1)

4 SCALE: 1/4" = 1'-0"

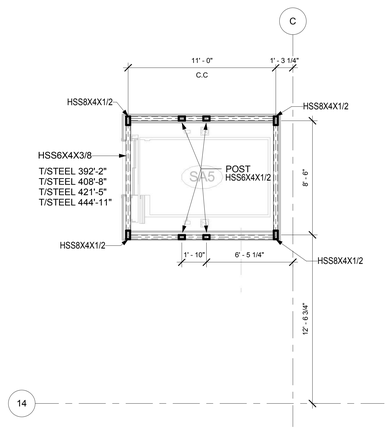

ELEVATOR INTERMEDIATE STEEL LAYOUT
FOR RAIL & JACK SUPPORT - LEVEL 20 TO
LEVEL 23

5 SCALE: 1/4" = 1'-0"

HUDSON YARDS - RETAIL PODIUM AND TOWER A

500 WEST 33RD STREET
New York, NY

Client
Related Companies
60 Columbus Circle
New York, NY 10023
TEL: 212.801.1000 FAX: 212.801.1048

Oxford Properties Group
320 Park Avenue, 17th Floor
New York, NY 10022
TEL: 212.986.7514 FAX: 212.986.7510

Architect
Kohn Pedersen Fox Associates
11 West 42nd Street
New York, New York 10036
TEL: 212.977.6500 FAX: 212.956.2526

Structural Engineer
Thornton Tomasetti, Inc.
51 Madison Avenue
New York, New York 10010
TEL: 917.661.7800 FAX: 718.661.7801

Mechanical, Electrical, Plumbing, Fire Protection
Jaros Baum & Bolles Consulting Engineers
80 Pine Street
New York, NY 10013
TEL: 212.530.9300 FAX: 212.269.5894

Retail Interior Design & Planning
Elkus-Manfredi
300 A Street
Boston, MA 02210
TEL: 617.426.1300

No.	Description	Date
1	D.O.B. AMENDMENT #2	10/15/2016

Key Plan

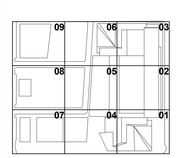

Issue Date: 10/15/2016
Project No. N11328.00
Drawn By: Author
Sheet Number

HYE -TA -S3-6142

Drawing Title

TOWER A INTERMEDIATE ELEVATOR SUPPORT PART PLANS

Drawing Number
S3-6142
B-Scan Drawing Number
S-549.00

SHEET 319 OF 443

Damian Titus
Buildings
APPROVED
Under Directive 2 of 1975
AMENDED APPLICATION
Date: 05/03/2017
NYC Development Hub

0 4' 8' 16'

N

© 2013 KOHN PEDERSEN FOX ASSOCIATES PC All rights reserved.

S3-6142
10/17/2016 11:51:52 AM
TOWER A INTERMEDIATE ELEVATOR SUPPORT PART
P:\KPF\Projects\N11328.00\Drawings\Structural\Revit\Issued\2016-10-16 - D.O.B. Amendment No.2\Revit - Rev. Removed\HYTA ELEVATOR INTERMEDIATE SUPPORTS.rvt

CERTIFICATE OF OCCUPANCY APPROVAL Job Number
ENVIRONMENTAL CONTROL BOARD Application Number

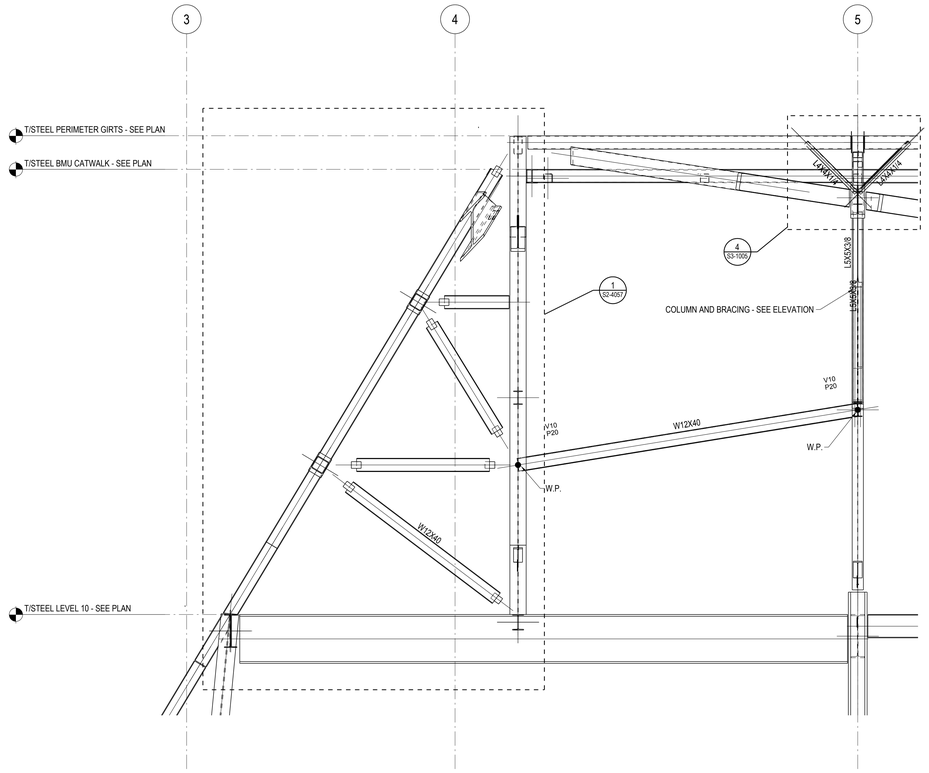

2 SECTION SHOWING LOW GIRT BRACING GRID 5 IN EAST COOLING TOWER WELL
SCALE: 1/8" = 1'-0

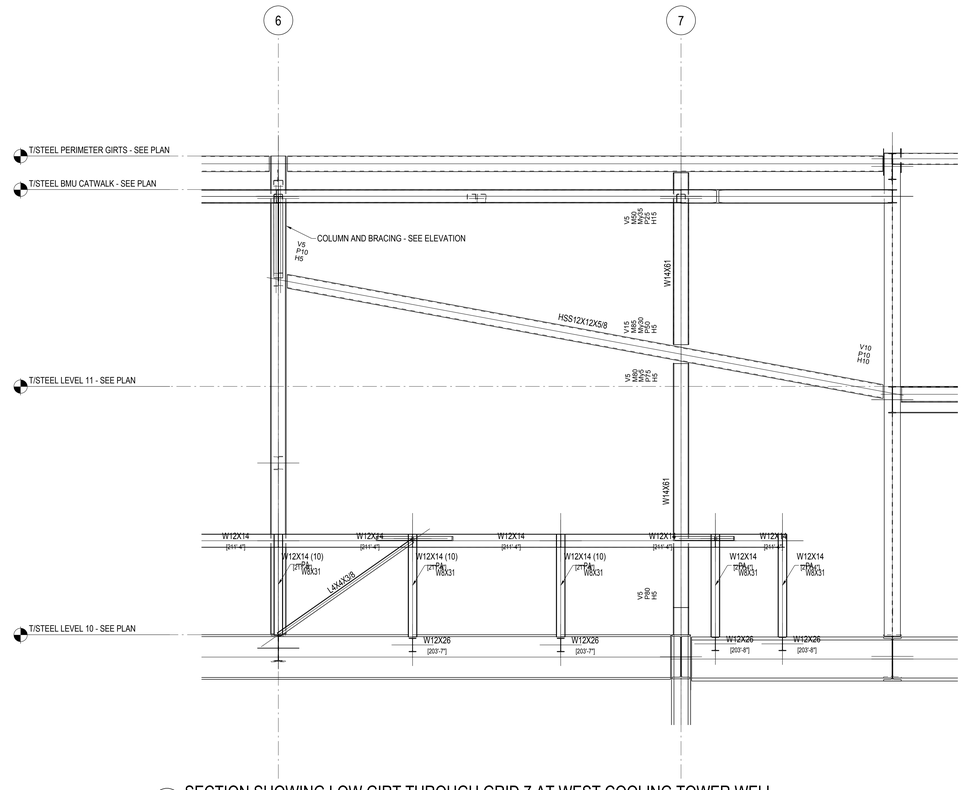

3 SECTION SHOWING LOW GIRT THROUGH GRID 7 AT WEST COOLING TOWER WELL
SCALE: 1/8" = 1'-0

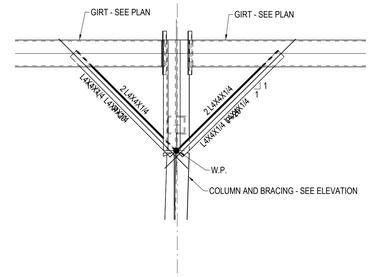

4 KICKER DETAIL AT EAST OVERBUILD FRAME ON GRID 5
SCALE: 1/8" = 1'-0

HUDSON YARDS - RETAIL PODIUM AND TOWER A

500 WEST 33RD STREET
New York, NY

Client
Related Companies
60 Columbus Circle
New York, NY 10023
TEL: 212.801.1000 FAX: 212.801.1048

Oxford Properties Group
320 Park Avenue, 17th Floor
New York, NY 10022
TEL: 212.986.7514 FAX: 212.986.7510

Architect
Kohn Pedersen Fox Associates
11 West 42nd Street
New York, New York 10036
TEL: 212.977.6500 FAX: 212.956.2526

Structural Engineer
Thornton Tomasetti, Inc.
51 Madison Avenue
New York, New York 10010
TEL: 917.661.7800 FAX: 718.661.7801

Mechanical, Electrical, Plumbing, Fire Protection
Jaros Baum & Bolles Consulting Engineers
80 Pine Street
New York, NY 10013
TEL: 212.530.9300 FAX: 212.269.5894

Retail Interior Design & Planning
Elkus-Manfredi
300 A Street
Boston, MA 02210
TEL: 617.426.1300

No	Description	Date
1	D.O.B AMENDMENT #2	10/15/2016

Key Plan

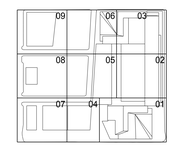

Issue Date 10/15/2016
Project No. N11328.00
Drawn By
Sheet Number

Damian Titus
Buildings
APPROVED
Under Directive 2 of 1975
MUNICIPAL BUILDINGS
Date: 05/03/2017
NYC Development Hub

HYE-TA-S3-1005
Drawing Title

PODIUM SECTIONS AND DETAILS V

Drawing Number
S3-1005
Revision Drawing Number
S-556.00

© 2013 KOHN PEDERSEN FOX ASSOCIATES PC. All rights reserved.

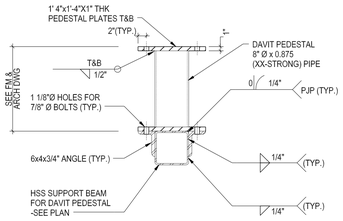

1 DAVIT PENESTAL CONNECTION TO HSS BEAM

SCALE : 1" = 1'-0"

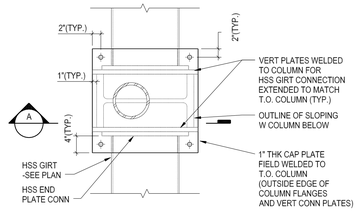

PLAN

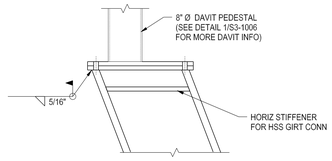

SECT A-A

2 DAVIT PENESTAL CONNECTION TO SLOPING COLUMN

SCALE : 1" = 1'-0"

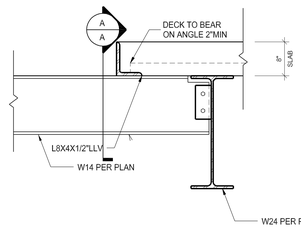

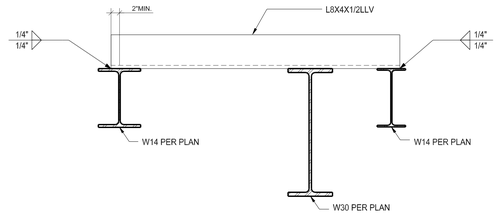

SECTION A-A

3 DECK SUPPORT AT LEVEL 8

SCALE : 1" = 1'-0"

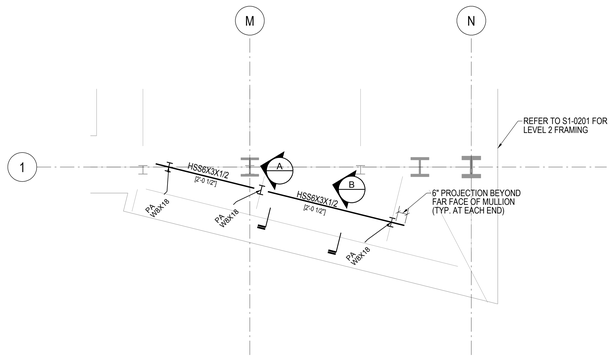

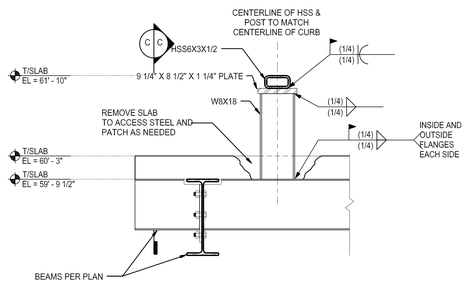

SECTION A-A

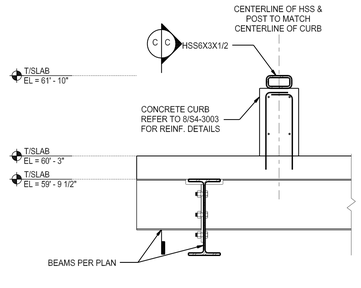

SECTION B-B

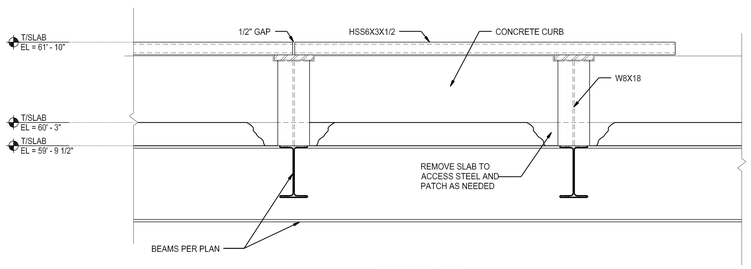

SECTION C-C

4 WT-31 DETAIL AT SOUTH ELEVATION

SCALE : 1" = 1'-0"

HUDSON YARDS - RETAIL PODIUM AND TOWER A

500 WEST 33RD STREET
New York, NY

Client
Related Companies
60 Columbus Circle
New York, NY 10023
TEL: 212.801.1000 FAX: 212.801.1048

Oxford Properties Group
320 Park Avenue, 17th Floor
New York, NY 10022
TEL: 212.986.7514 FAX: 212.986.7510

Architect
Kohn Pedersen Fox Associates
11 West 42nd Street
New York, New York 10036
TEL: 212.977.6500 FAX: 212.956.2526

Structural Engineer
Thornton Tomasetti, Inc.
51 Madison Avenue
New York, New York 10010
TEL: 917.661.7800 FAX: 718.661.7801

Mechanical, Electrical, Plumbing, Fire Protection
Jaros Baum & Bolles Consulting Engineers
80 Pine Street
New York, NY 10013
TEL: 212.530.9300 FAX: 212.269.5894

Retail Interior Design & Planning
Elkus-Manfredi
300 A Street
Boston, MA 02210
TEL: 617.426.1300

No.	Description	Date
1	D.O.B AMENDMENT #2	10/15/2016

Key Plan

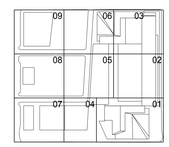

Issue Date 10/15/2016
Project No. N11328.00
Drawn By:
Sheet Number

HYE-TA-S3-1006
Drawing Title

PODIUM SECTIONS AND DETAILS VI

Drawing Number
S3-1006
B-Scan Drawing Number
S-557.00

SHEET 269 OF 443

Damian Titus
Buildings
APPROVED
Under Directive 2 of 1975
AMENDED APPLICATION
Date: 05/03/2017
NYC Development Hub

© 2013 KOHN PEDERSEN FOX ASSOCIATES. All rights reserved.

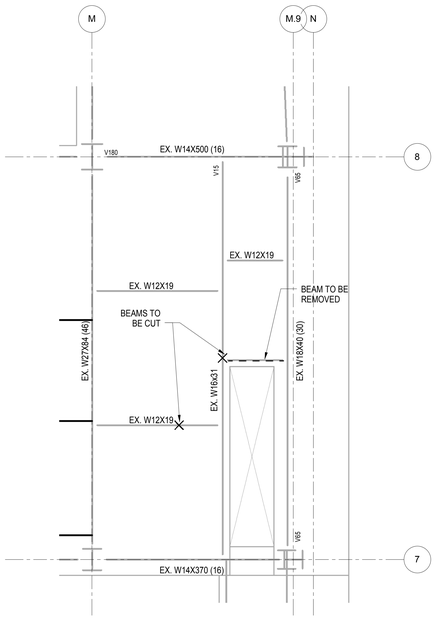

NOTE:
1. CONTRACTOR TO SHORE BEAMS AND DECK AS REQUIRED PRIOR TO CUTTING EXISTING FRAMING

1 LEVEL 00 - STAIR CB-01 DEMO PLAN
1/4" = 1'-0"

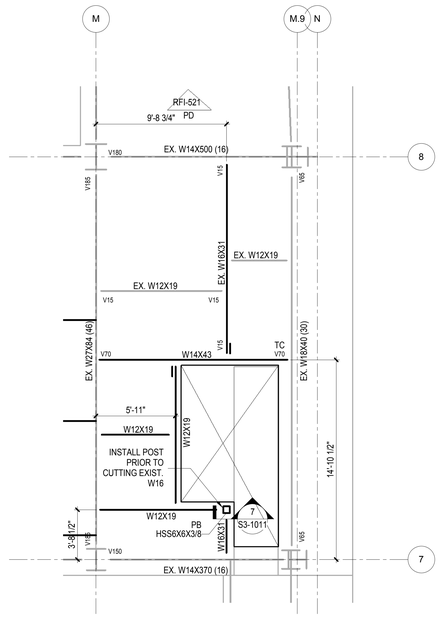

NOTE:
1. DRY PACK BETWEEN CHANNELS AND METAL DECK FOR FULL BEARING SUPPORT

2 Level 00 - STAIR CB-01 PART PLAN
1/4" = 1'-0"

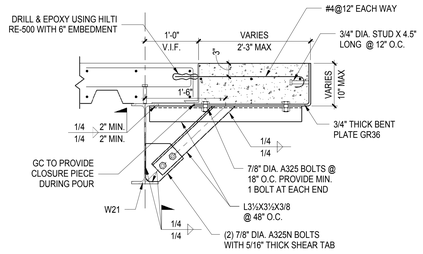

3 SECTION AT SLAB EXTENSION AT W21 BEAM
1" = 1'-0"

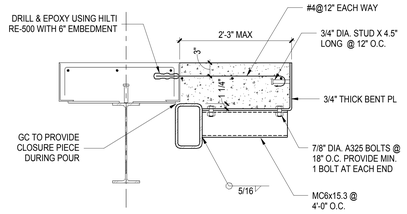

5 SECTION AT SLAB EXTENSION AT W18 BEAM
1" = 1'-0"

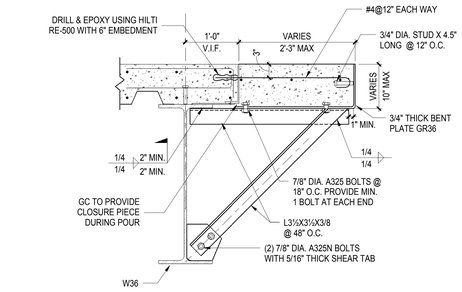

4 SECTION AT SLAB EXTENSION AT W36 BEAM
1" = 1'-0"

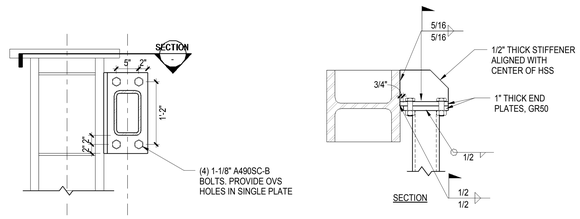

6 SECTION AT HSS CONNECTION
1" = 1'-0"

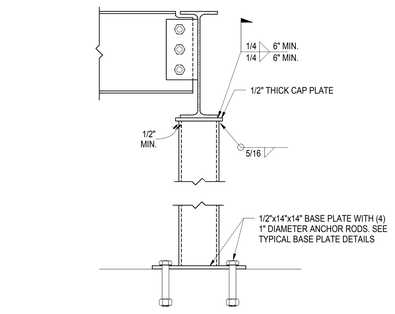

7 SEATED CONNECTION AT HSS POST
1 1/2" = 1'-0"

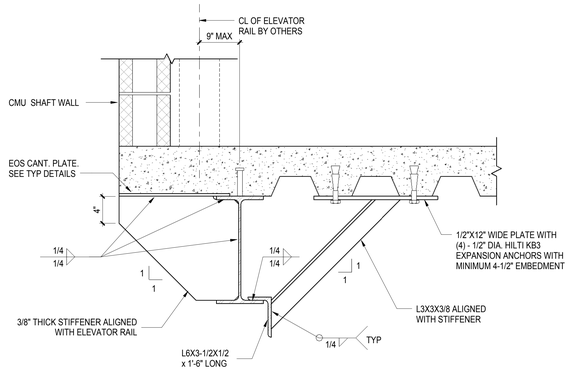

8 SECTION AT P-BANK ELEVATOR RAIL
1 1/2" = 1'-0"

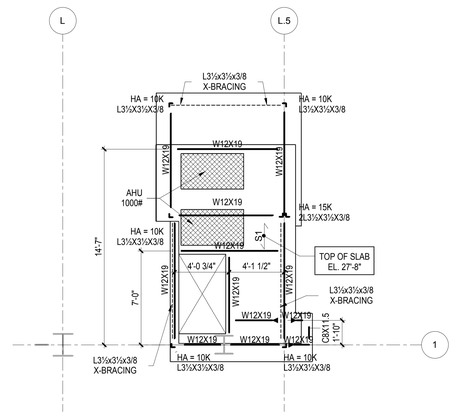

9 SE ENTRY AHU MEZZANINE PART PLAN
1/4" = 1'-0"

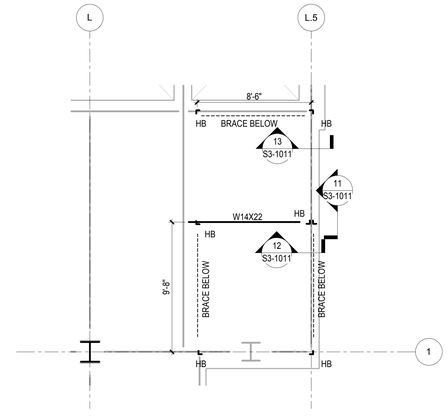

10 Level 01 - SE ENTRY AHU PART PLAN
1/4" = 1'-0"

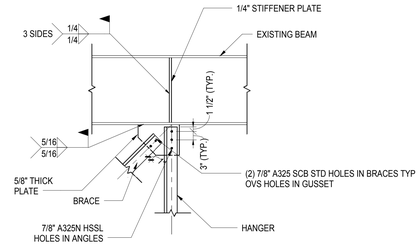

11 HANGER CONNECTION TO EXISTING PLATFORM STEEL
1" = 1'-0"

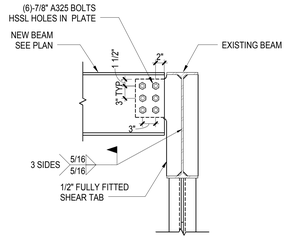

12 NEW BEAM TO EXISTING BEAM CONNECTION
1" = 1'-0"

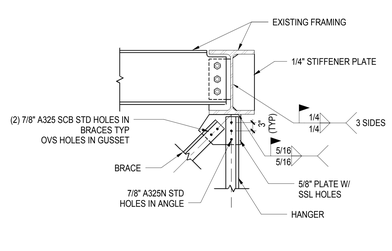

13 HANGER (ONLY) TO EXISTING BEAM
1" = 1'-0"

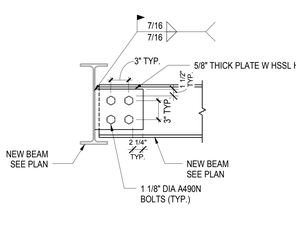

14 W8 CONNECTION TO EXISTING BEAM
1" = 1'-0"

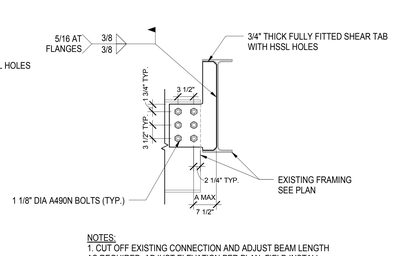

NOTES:
1. CUT OFF EXISTING CONNECTION AND ADJUST BEAM LENGTH AS REQUIRED. ADJUST ELEVATION PER PLAN. FIELD INSTALL NEW CONNECTION AS SHOWN

15 NEW CONNECTION AFTER BEAM SHIFT
1" = 1'-0"

Damian Titus
Buildings
APPROVED
Under Directive 2 of 1975
AMENDED APPLICATION
Date: 05/03/2017
NYC Development Hub

0 4' 8' 16'

N

HUDSON YARDS - RETAIL PODIUM AND TOWER A
500 WEST 33RD STREET
New York, NY

Client
Related Companies
60 Columbus Circle
New York, NY 10023
TEL: 212.801.1000 FAX: 212.801.1048

Oxford Properties Group
320 Park Avenue, 17th Floor
New York, NY 10022
TEL: 212.986.7514 FAX: 212.986.7510

Architect
Kohn Pedersen Fox Associates
11 West 42nd Street
New York, New York 10036
TEL: 212.977.6500 FAX: 212.956.2526

Structural Engineer
Thornton Tomasetti, Inc.
51 Madison Avenue
New York, New York 10010
TEL: 917.661.7800 FAX: 718.661.7801

Mechanical, Electrical, Plumbing, Fire Protection
Jaros Baum & Bolles Consulting Engineers
80 Pine Street
New York, NY 10013
TEL: 212.530.9300 FAX: 212.269.5894

Retail Interior Design & Planning
Elkus-Manfredi
300 A Street
Boston, MA 02210
TEL: 617.426.1300

No.	Description	Date
1	D.O.B. AMENDMENT #2	10/15/2016

Key Plan

Issue Date: 10/15/2016
Project No. N11328.00
Drawn By Author
Sheet Number

STATE OF NEW YORK — MICHAEL J. SWIRSKY — 035 — LICENSED PROFESSIONAL ENGINEER

Drawing Title
PODIUM SECTIONS & DETAILS

Drawing Number
S3-1011
S-Scan Drawing Number
S-558.00

HYE-TA-S3-1011

SHEET 270 OF 433

© 2013 KOHN PEDERSEN FOX ASSOCIATES PC. All rights reserved.

DEPT OF BLDGS 421390025 Job Number
B1000421390 Scan Code

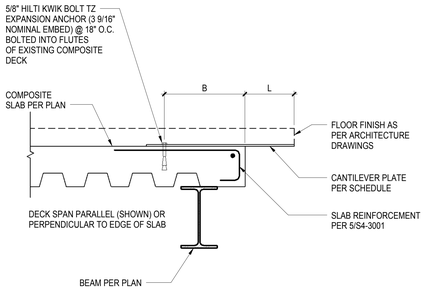

CANTILEVER PLATE SCHEDULE		
CANTILEVER PLATE EXTENSION "L"	PLATE THICKNESS (A36 MIN.)	BACKSPAN LENGTH "B"
L ≤ 11"	3/8"	18"
11" < L ≤ 1'-3"	1/2"	18"
1'-3" < L ≤ 1'-6"	5/8"	18"

1 DETAIL AT EDGE OF SLAB EXTENSION
1" = 1'-0"

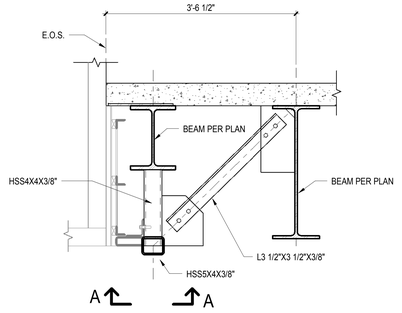

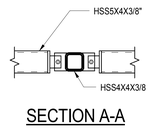

SECTION A-A

2 KICKER DETAIL AT RESTAURANT WINDOW
1" = 1'-0"

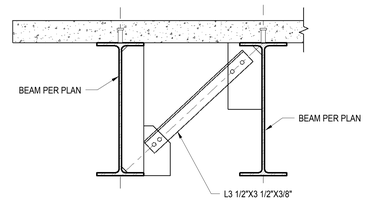

3 DETAIL AT RESTAURANT WINDOW
1" = 1'-0"

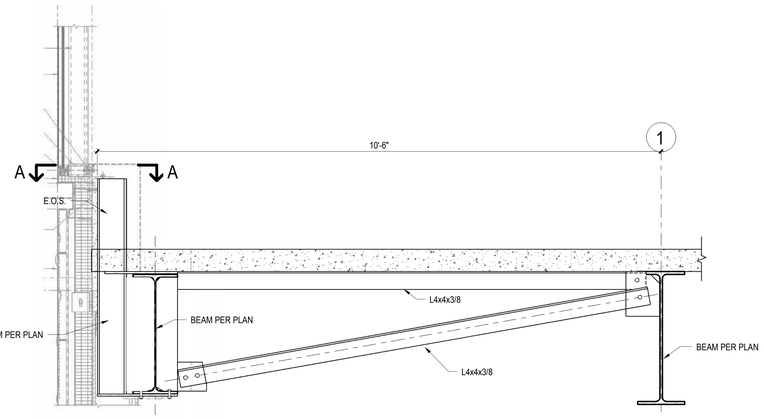

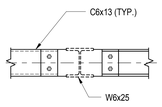

SECTION A-A

4 DETAIL AT SOUTH RESTAURANT WINDOW
1" = 1'-0"

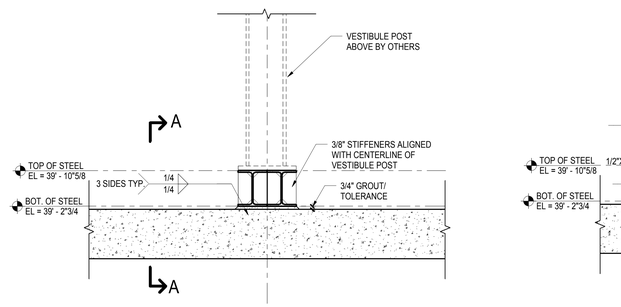

5 DETAIL AT SW VESTIBULE POST
1" = 1'-0"

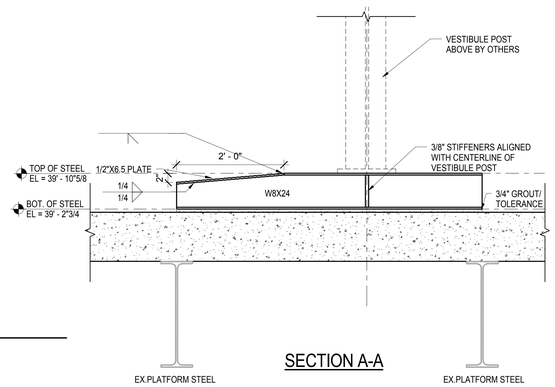

SECTION A-A

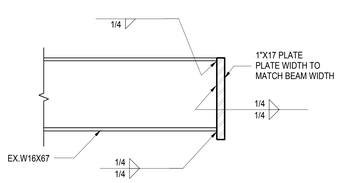

6 ESCALATOR EDGE BEAM DETAIL
1" = 1'-0"

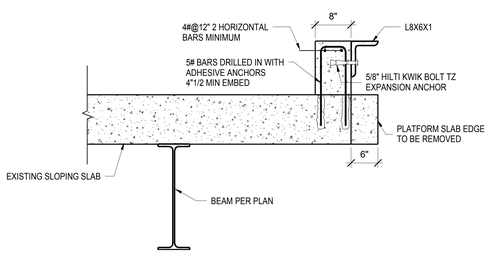

7 DETAIL AT CONCRETE CURB WITH PLATFORM RETROFIT
1" = 1'-0"

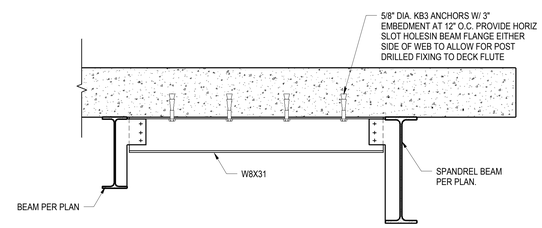

8 BANNER SUPPORT STEEL
1" = 1'-0"

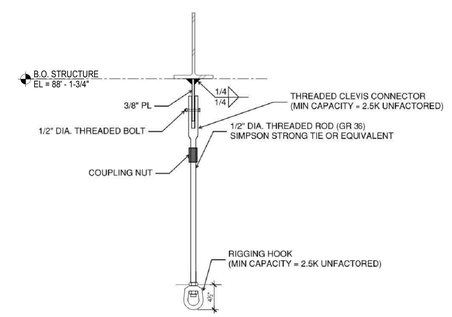

9 WEST ATRIUM RIGGING CONNECTION DETAIL
1" = 1'-0"

HUDSON YARDS - RETAIL PODIUM AND TOWER A
500 WEST 33RD STREET
New York, NY

Client
Related Companies
60 Columbus Circle
New York, NY 10023
TEL: 212.801.1000 FAX: 212.801.1048

Oxford Properties Group
320 Park Avenue, 17th Floor
New York, NY 10022
TEL: 212.986.7514 FAX: 212.986.7510

Architect
Kohn Pedersen Fox Associates
11 West 42nd Street
New York, New York 10036
TEL: 212.977.6500 FAX: 212.956.2526

Structural Engineer
Thornton Tomasetti, Inc.
51 Madison Avenue
New York, New York 10010
TEL: 917.661.7800 FAX: 718.661.7801

Mechanical, Electrical, Plumbing, Fire Protection
Jaros Baum & Bolles Consulting Engineers
80 Pine Street
New York, NY 10013
TEL: 212.530.9300 FAX: 212.269.5894

Retail Interior Design & Planning
Elkus-Manfredi
300 A Street
Boston, MA 02210
TEL: 617.426.1300

No.	Description	Date
1	D.O.B. AMENDMENT #2	10/15/2016

Key Plan

Issue Date: 10/15/2016
Project No. N11328.00
Drawn By Author
Sheet Number

HYE-TA-S3-1012

SECTIONS AND DETAILS

Drawing Number
S3-1012
B-Scan Drawing Number
S-559.00

SHEET 27 OF 143

Damian Titus
Buildings
APPROVED
Under Directive 2 of 1975
MECHANICAL APPLICATION
Date: 05/03/2017
NYC Development Hub

© 2013 KOHN PEDERSEN FOX ASSOCIATES PC. All rights reserved.

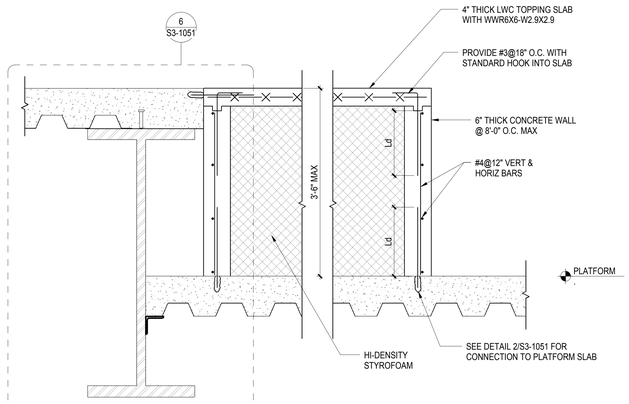

1 DETAIL AT RETAIL BUILD UP SLAB
1" = 1'-0"

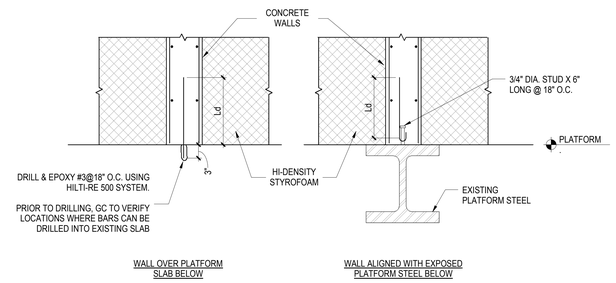

2 BASE OF WALL DETAIL AT RETAIL BUILD UP SLAB
1" = 1'-0"

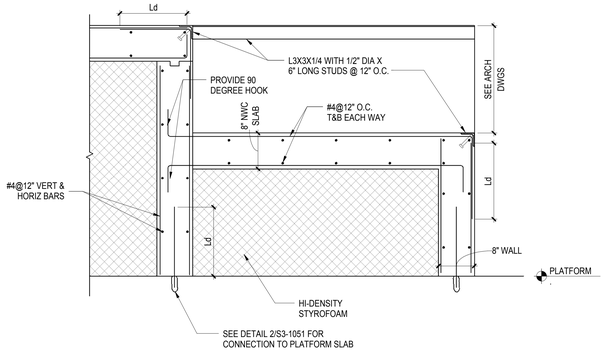

3 TYPICAL LOADING DOCK LEVELER DETAIL
1" = 1'-0"

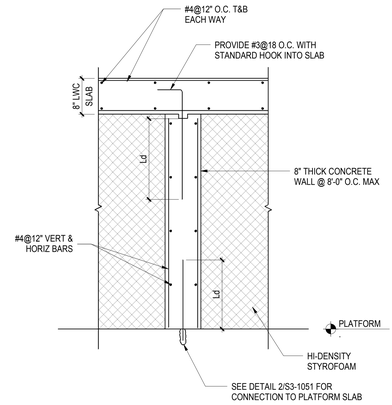

4 TYPICAL DETAIL AT LOADING DOCK SKIRT & PERMANENT COMPACTORS
1" = 1'-0"

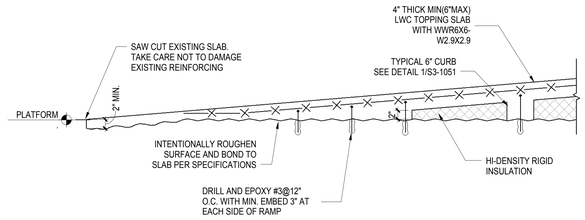

5 TYPICAL DETAIL AT RAMP BUILD UP
1" = 1'-0"

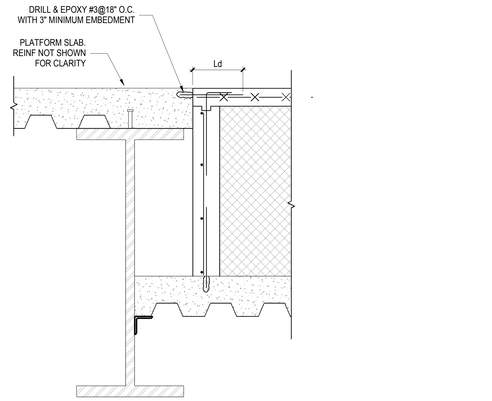

6 TYPICAL DETAIL AT BUILDUP ADJACENT TO EXIST PLATFORM SLAB
1" = 1'-0"

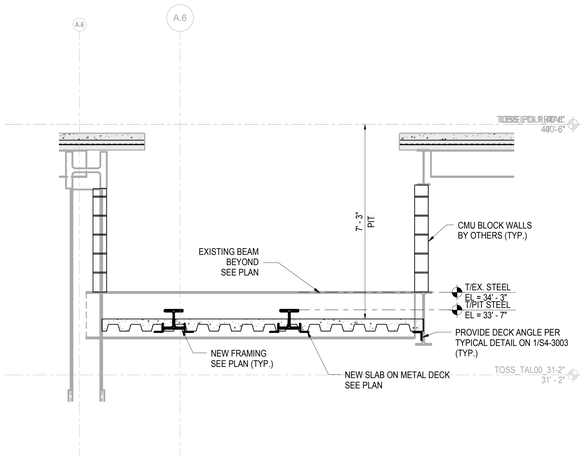

7 SECTION AT R BANK ELEVATOR PIT
1/2" = 1'-0"

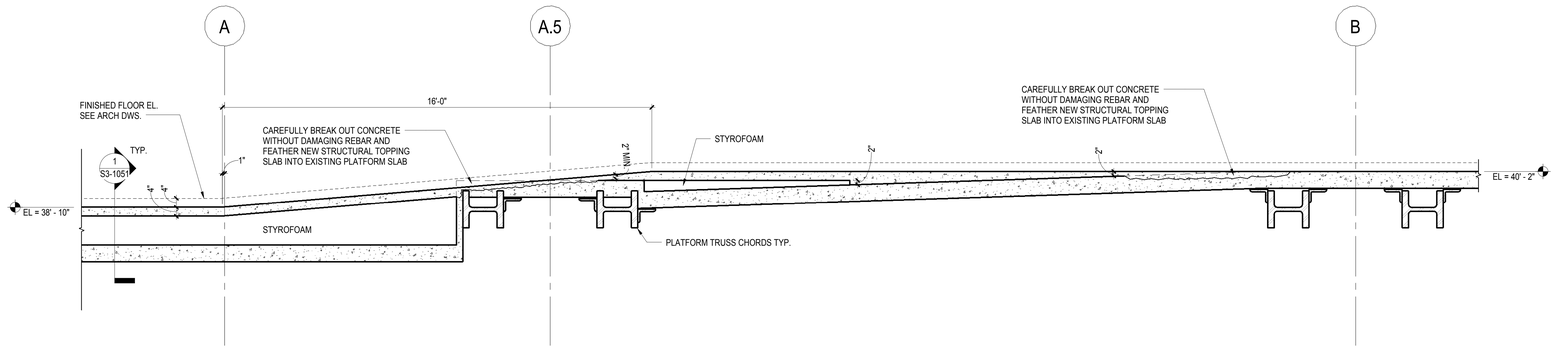

8 SECTION AT NORTHWEST ENTRANCE RAMP
NOT TO SCALE

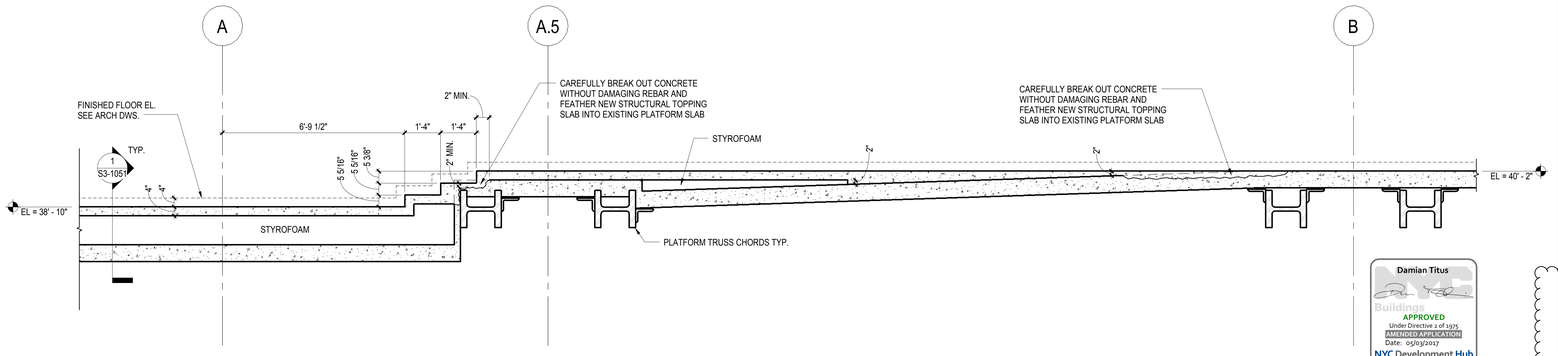

9 SECTION AT NORTHWEST ENTRANCE STAIRS
NOT TO SCALE

Damian Titus
Buildings
APPROVED
Under Directive 2 of 1975
MECHANICAL APPLICATION
Date: 05/03/2017
NYC Development Hub

0 4' 8' 16'

N

HUDSON YARDS - RETAIL PODIUM AND TOWER A

500 WEST 33RD STREET
New York, NY

Client
Related Companies
60 Columbus Circle
New York, NY 10023
TEL: 212.801.1000 FAX: 212.801.1048

Oxford Properties Group
320 Park Avenue, 17th Floor
New York, NY 10022
TEL: 212.986.7514 FAX: 212.986.7510

Architect
Kohn Pedersen Fox Associates
11 West 42nd Street
New York, New York 10036
TEL: 212.977.6500 FAX: 212.956.2526

Structural Engineer
Thornton Tomasetti, Inc.
51 Madison Avenue
New York, NY 10010
TEL: 917.661.7800 FAX: 718.661.7801

Mechanical, Electrical, Plumbing, Fire Protection
Jaros Baum & Bolles Consulting Engineers
80 Pine Street
New York, NY 10013
TEL: 212.530.9300 FAX: 212.269.5894

Retail Interior Design & Planning
Elkus-Manfredi
300 A Street
Boston, MA 02210
TEL: 617.426.1300

No.	Description	Date
1	D.O.B. AMENDMENT #2	10/15/2016

Key Plan

Issue Date: 10/15/2016
Project No. N11328.00
Drawn By Author
Sheet Number

HYE-TA-S3-1051

PODIUM SECTIONS & DETAILS

Drawing Number
S3-1051
B-Scan Drawing Number
S-560.00

© 2013 KOHN PEDERSEN FOX ASSOCIATES PC All rights reserved.

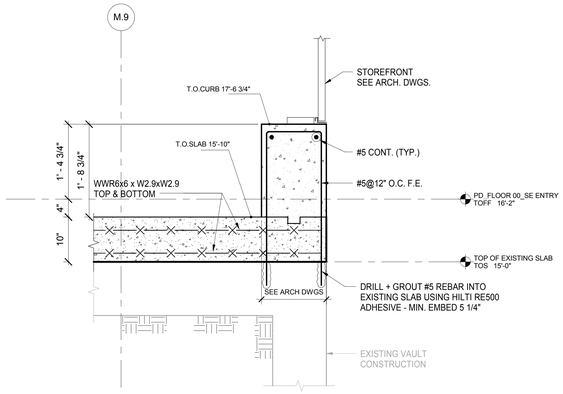

1 SECTION
SCALE: 1" = 1'-0"

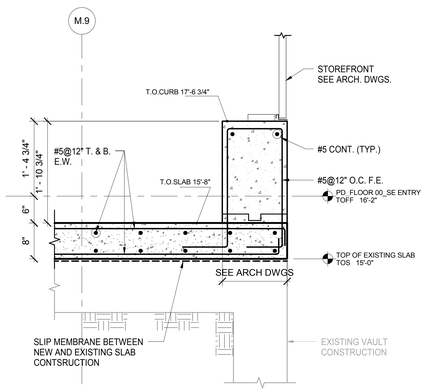

2 SECTION
SCALE: 1" = 1'-0"

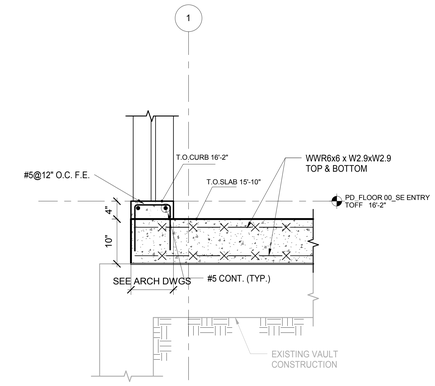

3 SECTION
SCALE: 1" = 1'-0"

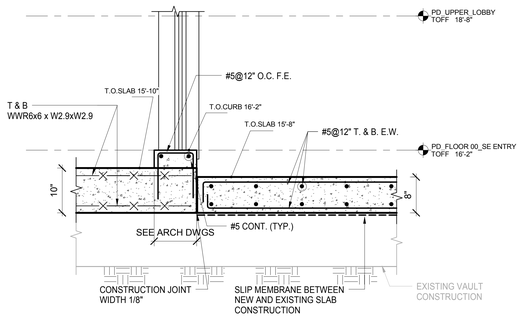

4 SECTION
SCALE: 1" = 1'-0"

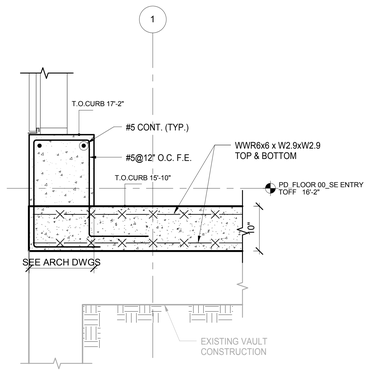

5 SECTION
SCALE: 1" = 1'-0"

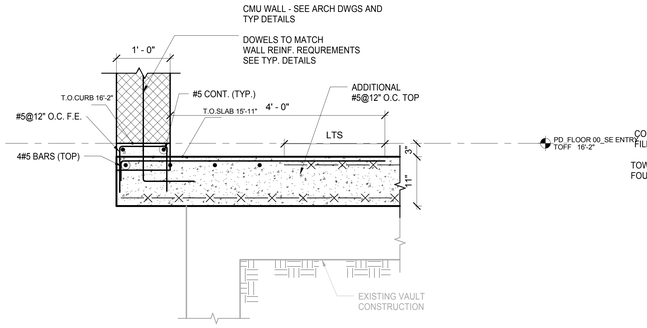

6 SECTION
SCALE: 1" = 1'-0"

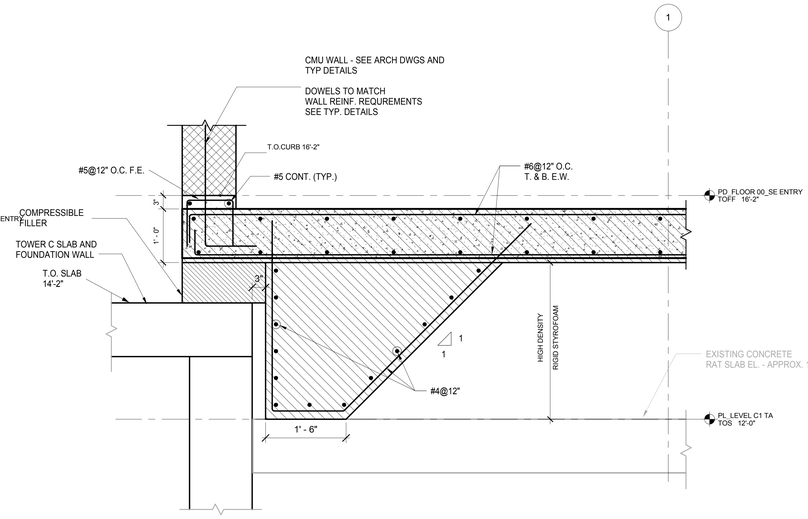

7 SECTION
SCALE: 1" = 1'-0"

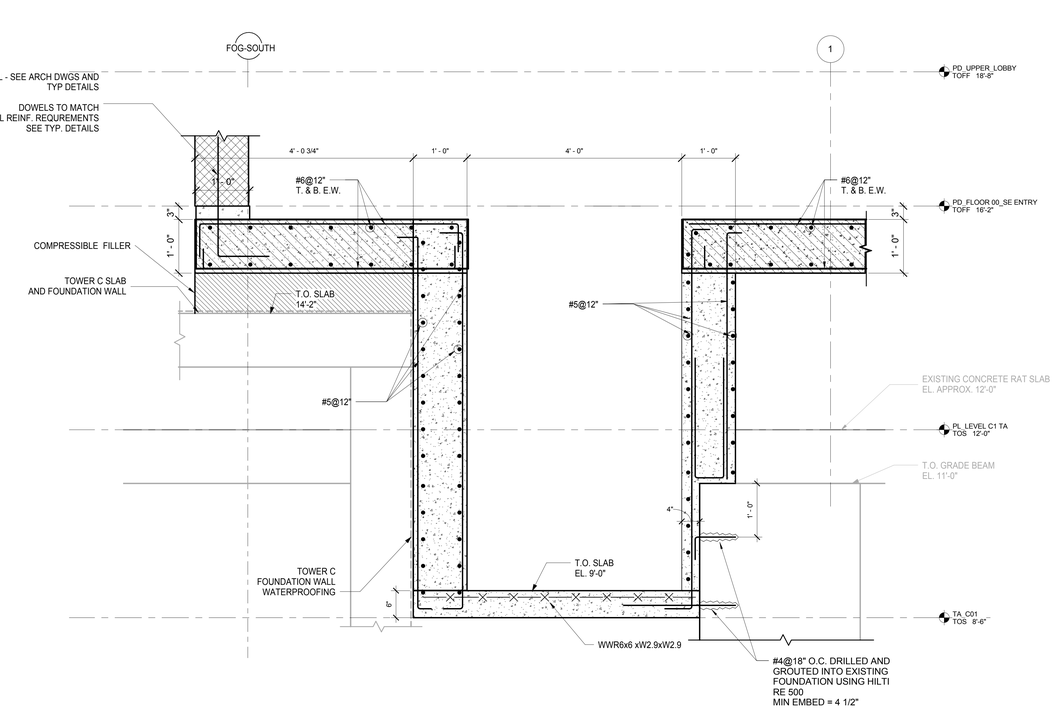

8 SECTION
SCALE: 1" = 1'-0"

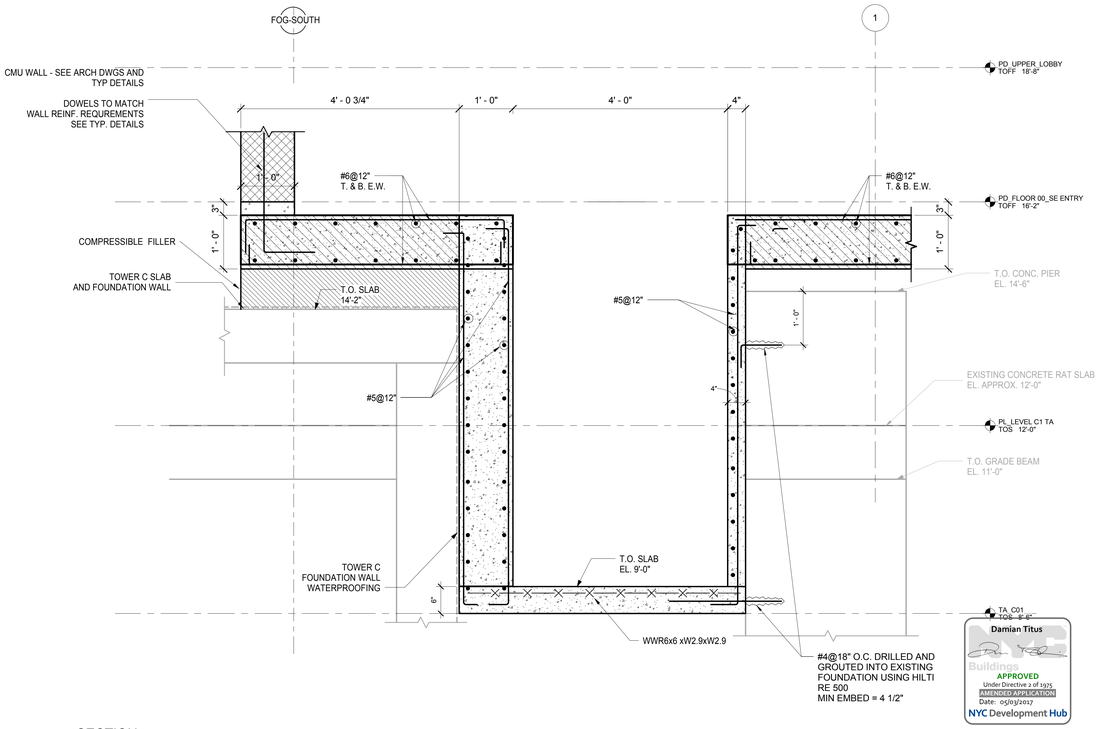

9 SECTION
SCALE: 1" = 1'-0"

HUDSON YARDS - RETAIL PODIUM AND TOWER A

500 WEST 33RD STREET
New York, NY

Client
Related Companies
60 Columbus Circle
New York, NY 10023
TEL: 212.801.1000 FAX: 212.801.1048

Oxford Properties Group
320 Park Avenue, 17th Floor
New York, NY 10022
TEL: 212.986.7514 FAX: 212.986.7510

Architect
Kohn Pedersen Fox Associates
11 West 42nd Street
New York, New York 10036
TEL: 212.977.6500 FAX: 212.956.2526

Structural Engineer
Thornton Tomasetti, Inc.
51 Madison Avenue
New York, New York 10010
TEL: 917.661.7800 FAX: 718.661.7801

Mechanical, Electrical, Plumbing, Fire Protection
Jaros Baum & Bolles Consulting Engineers
80 Pine Street
New York, NY 10013
TEL: 212.530.9300 FAX: 212.269.5894

Retail Interior Design & Planning
Elkus-Manfredi
300 A Street
Boston, MA 02210
TEL: 617.426.1300

No.	Description	Date
1	D.O.B. AMENDMENT #2	10/15/2016

Key Plan

Issue Date: 10/15/2016
Project No. N11328.00
Drawn By Author
Sheet Number

HYE -TA -S3-1052
Drawing Title

SOUTH-EAST ENTRANCE SECTIONS I

Drawing Number
S3-1052
A-Scan Drawing Number
S-561.00

Damian Titus
Buildings
APPROVED
Under Directive 3 of 1975
AMENDED APPLICATION
Date: 05/01/2017
NYC Development Hub

0 4' 8' 16'

SHEET 273 OF 443

© 2013 KOHN PEDERSEN FOX ASSOCIATES PC. All rights reserved.

S3-1052
10/12/2016 2:51:21 PM
S:\SOUTH-EAST ENTRANCE SECTIONS I
P:\NY\Projects\N11328.00\Drawings\Structural\Record\Issued\2016-10-16 - D.O.B. Amendment No.2\Revit - Rev. Removed\HYTA PD_SLABS_COORDINATION.rvt

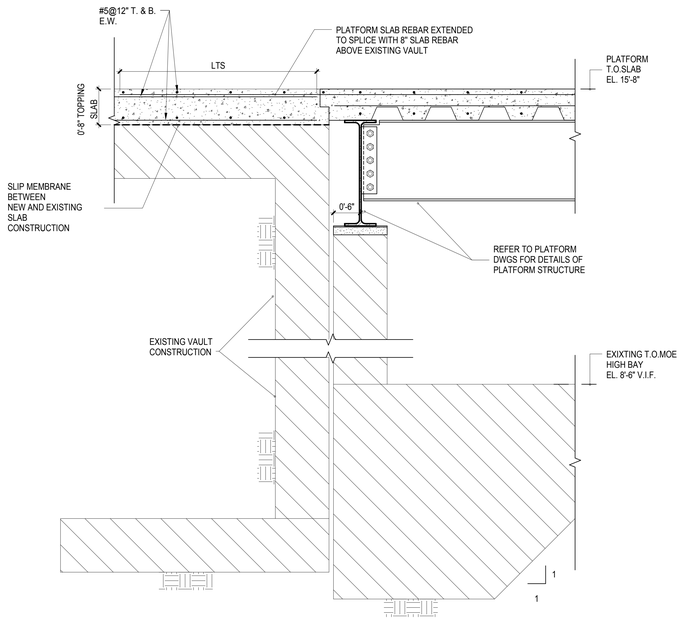

1 SECTION
SCALE: 1" = 1'-0"

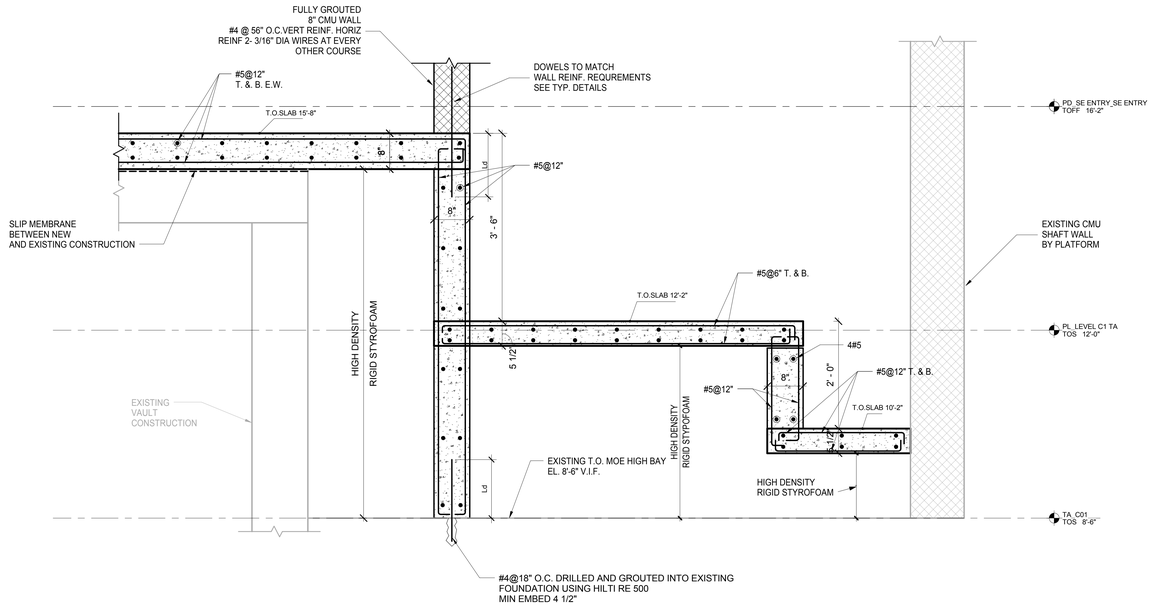

2 SECTION
SCALE: 1" = 1'-0"

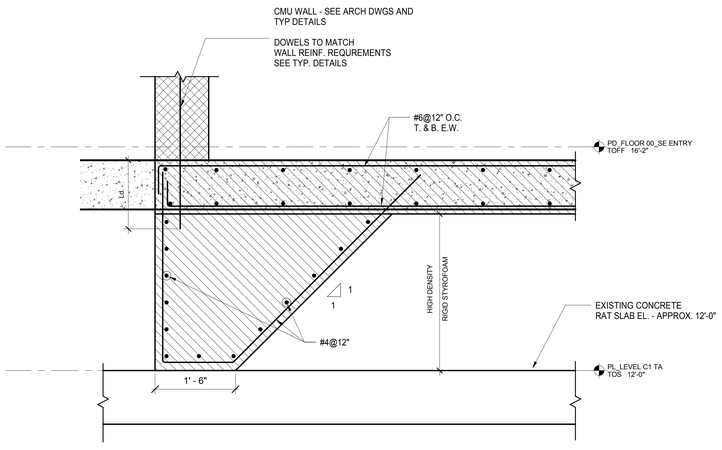

3 SECTION
SCALE: 1" = 1'-0"

HUDSON YARDS - RETAIL PODIUM AND TOWER A

500 WEST 33RD STREET
New York, NY

Client
Related Companies
60 Columbus Circle
New York, NY 10023
TEL: 212.801.1000 FAX: 212.801.1048

Oxford Properties Group
320 Park Avenue, 17th Floor
New York, NY 10022
TEL: 212.986.7514 FAX: 212.986.7510

Architect
Kohn Pedersen Fox Associates
11 West 42nd Street
New York, New York 10036
TEL: 212.977.6500 FAX: 212.956.2526

Structural Engineer
Thornton Tomasetti, Inc.
51 Madison Avenue
New York, New York 10010
TEL: 917.661.7800 FAX: 718.661.7801

Mechanical, Electrical, Plumbing, Fire Protection
Jaros Baum & Bolles Consulting Engineers
80 Pine Street
New York, NY 10013
TEL: 212.530.9300 FAX: 212.269.5894

Retail Interior Design & Planning
Elkus-Manfredi
300 A Street
Boston, MA 02210
TEL: 617.426.1300

No.	Description	Date
1	D.O.B. AMENDMENT #2	10/15/2016

Key Plan

Issue Date: 10/15/2016
Project No. N11328.00
Drawn By: Author
Sheet Number

HYE -TA -S3-1053

Drawing Title

SOUTH-EAST ENTRANCE SECTIONS II

Drawing Number
S3-1053
B-Scan Drawing Number
S-562.00

Damian Titus
Buildings
APPROVED
Under Directive 2 of 1975
AMENDED APPLICATION
Date: 05/03/2017
NYC Development Hub

0 4' 8' 16'

SHEET 274 OF 443

© 2013 KOHN PEDERSEN FOX ASSOCIATES PC. All rights reserved.

S3-1053
10/12/2016 2:51:22 PM
SOUTH-EAST ENTRANCE SECTIONS II
P:\NY1\Projects\N11328.00\Drawings\Structural\Record\Issued\2016-10-16 - D.O.B. Amendment No.2\Revit - Rev. Removed\HYTA PD_SLABS_COORDINATION.rvt

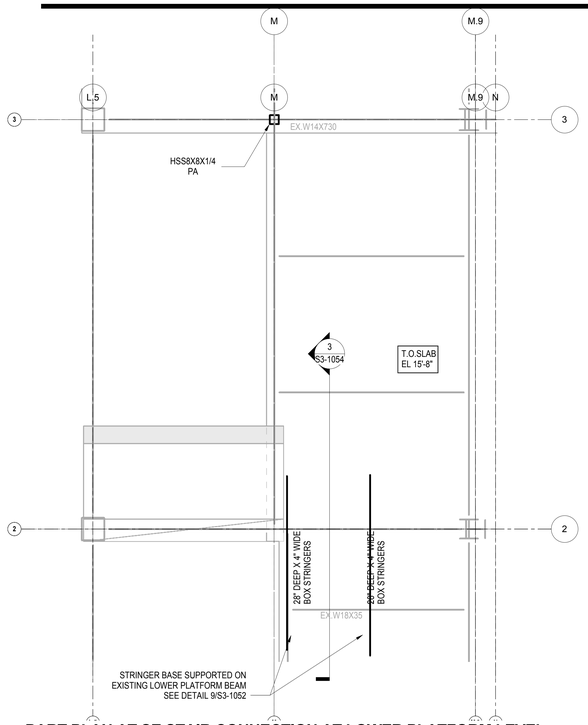

1 PART PLAN AT SE STAIR CONNECTION AT LOWER PLATFORM LEVEL
1/4" = 1'-0"

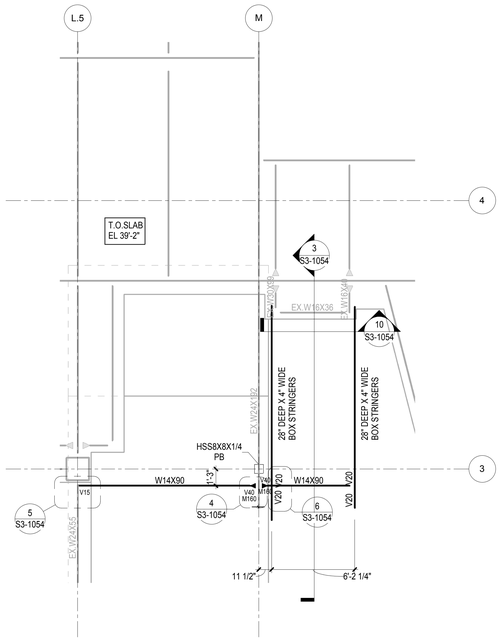

2 PART PLAN AT SE STAIR CONNECTION AT UPPER PLATFORM LEVEL
1/4" = 1'-0"

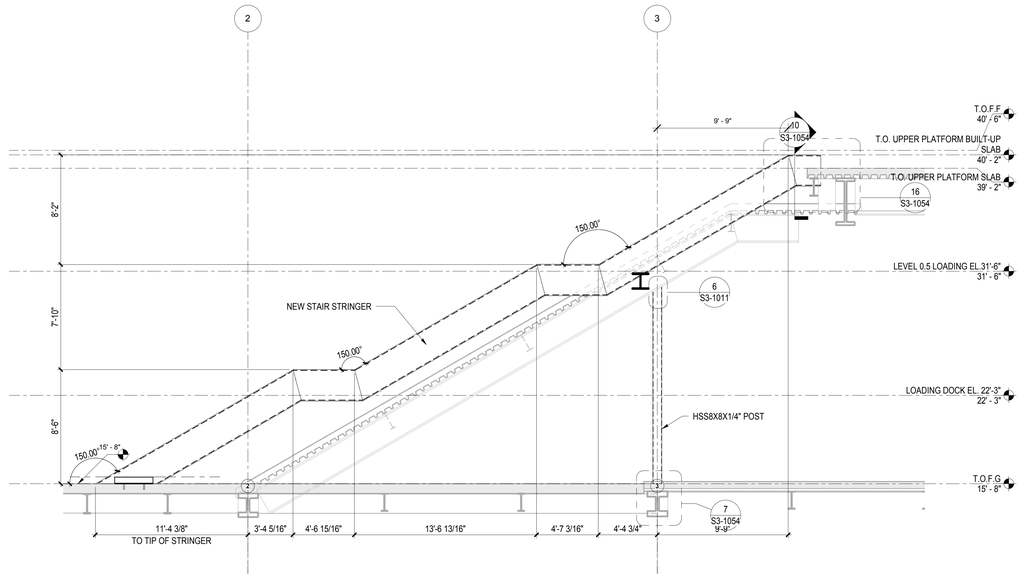

3 SECTION OF SE STAIR
1/4" = 1'-0"

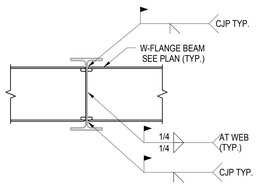

4 DETAIL 1
1" = 1'-0"

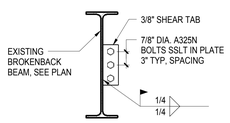

5 DETAIL 2
1" = 1'-0"

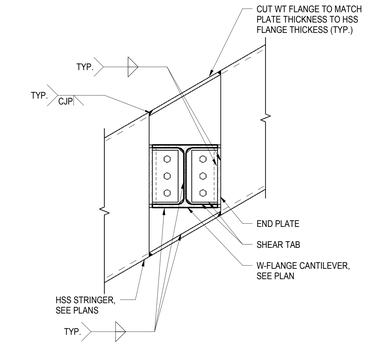

6 DETAIL 3
1" = 1'-0"

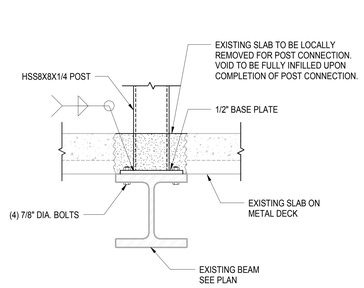

7 SECTION AT BASE OF POST
1" = 1'-0"

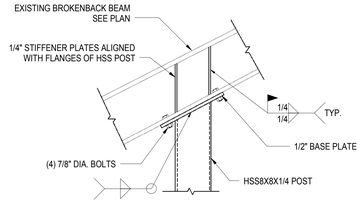

8 SECTION AT TOP OF POST
1" = 1'-0"

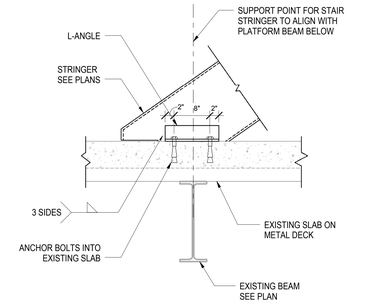

9 DETAIL AT BASE OF SE STAIR
1" = 1'-0"

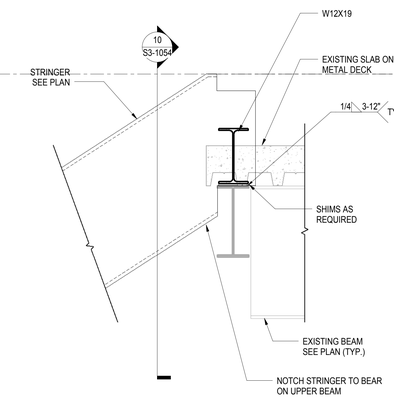

16 DETAIL AT TOP OF SE STAIR
1" = 1'-0"

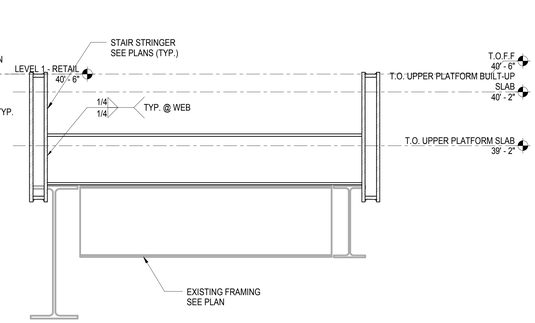

10 SECTION AT TOP OF SE STAIR LANDING
1" = 1'-0"

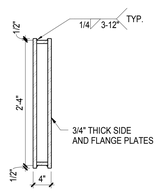

11 STRINGER DETAIL
1" = 1'-0"

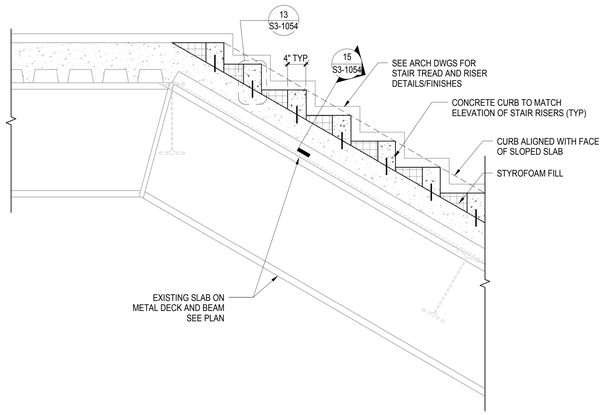

12 DETAIL AT NE STAIR
1" = 1'-0"

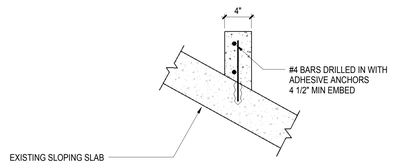

13 DETAIL AT CONCRETE CURB
1 1/2" = 1'-0"

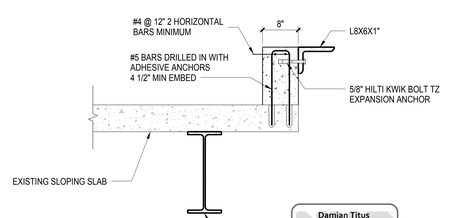

15 DETAIL AT CONCRETE CURB
1" = 1'-0"

Damian Titus
DOB
Building
APPROVED
Under Directive 2 of 1975
EXTENSION OF OPERATION
Date: 09/9/2017
NYC Development Hub

0 4' 8' 16'

N

HUDSON YARDS - RETAIL PODIUM AND TOWER A

500 WEST 33RD STREET
New York, NY

Client
Related Companies
60 Columbus Circle
New York, NY 10023
TEL: 212.801.1000 FAX: 212.801.1048

Oxford Properties Group
320 Park Avenue, 17th Floor
New York, NY 10022
TEL: 212.986.7514 FAX: 212.986.7510

Architect
Kohn Pedersen Fox Associates
11 West 42nd Street
New York, New York 10036
TEL: 212.977.6500 FAX: 212.956.2526

Structural Engineer
Thornton Tomasetti, Inc.
51 Madison Avenue
New York, New York 10010
TEL: 917.661.7800 FAX: 718.661.7801

Mechanical, Electrical, Plumbing, Fire Protection
Jaros Baum & Bolles Consulting Engineers
80 Pine Street
New York, NY 10013
TEL: 212.530.9300 FAX: 212.269.5894

Retail Interior Design & Planning
Elkus-Manfredi
300 A Street
Boston, MA 02210
TEL: 617.426.1300

No	Description	Date
1	D.O.B. AMENDMENT #2	10/15/2016

Key Plan

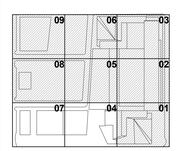

Issue Date: 10/15/2016
Project No. N11328.00
Drawn By Author
Sheet Number

HYE-TA-S3-1054
Drawing Title

STAIR SECTIONS AND DETAILS

Drawing Number
S3-1054
B-Scan Drawing Number
S-563.00

SHEET 273 OF 443

© 2013 KOHN PEDERSEN FOX ASSOCIATES PC. All rights reserved.

DEPT OF BLDGS 421395025 Job Number
ES2005983843 Scan Code

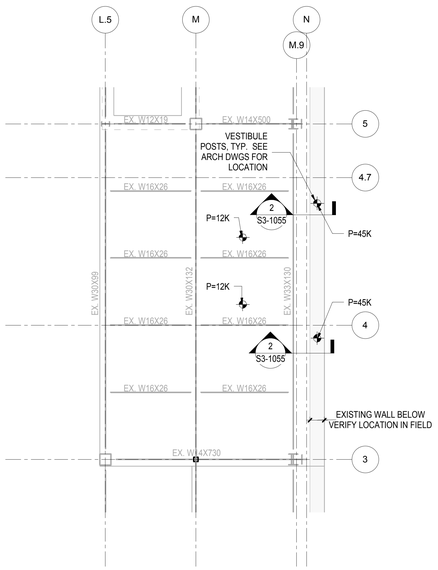

1 PART PLAN AT EAST VESTIBULE AT SIDEWALK LEVEL
1/8" = 1'-0"

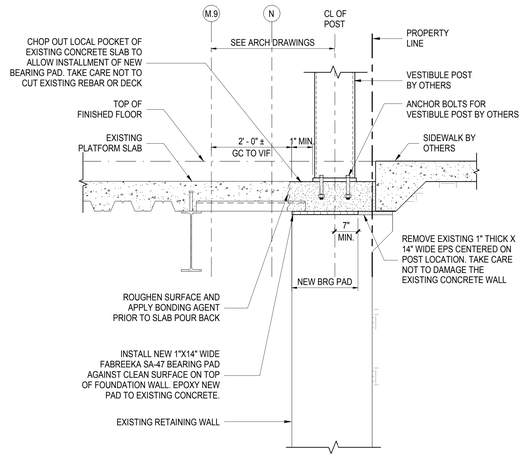

2 PLATFORM REPAIR AT EAST VESTIBULE
3/4" = 1'-0"

HUDSON YARDS - RETAIL PODIUM AND TOWER A

500 WEST 33RD STREET
New York, NY

Client
Related Companies
60 Columbus Circle
New York, NY 10023
TEL: 212.801.1000 FAX: 212.801.1048

Oxford Properties Group
320 Park Avenue, 17th Floor
New York, NY 10022
TEL: 212.986.7514 FAX: 212.986.7510

Architect
Kohn Pedersen Fox Associates
11 West 42nd Street
New York, New York 10036
TEL: 212.977.6500 FAX: 212.956.2526

Structural Engineer
Thornton Tomasetti, Inc.
51 Madison Avenue
New York, New York 10010
TEL: 917.661.7800 FAX: 718.661.7801

Mechanical, Electrical, Plumbing, Fire Protection
Jaros Baum & Bolles Consulting Engineers
80 Pine Street
New York, NY 10013
TEL: 212.530.9300 FAX: 212.269.5894

Retail Interior Design & Planning
Elkus-Manfredi
300 A Street
Boston, MA 02210
TEL: 617.426.1300

No.	Description	Date
1	D.O.B. AMENDMENT #2	10/15/2016

Key Plan

Issue Date: 10/15/2016
Project No. N11328.00
Drawn By: Author
Sheet Number

HYE-TA-S3-1055
Drawing Title

PODIUM SECTIONS & DETAILS

Drawing Number
S3-1055
B-Scan Drawing Number
S-564.00

Damian Titus
Buildings
APPROVED
Under Directive 2 of 1975
AMENDED APPLICATION
Date: 05/01/2017
NYC Development Hub

0 4' 8' 16'

SHEET 276 OF 433

© 2013 KOHN PEDERSEN FOX ASSOCIATES PC. All rights reserved

CERTIFICATE NUMBER: 21139A0121 Job Number
E1640533A000 Sheet Count

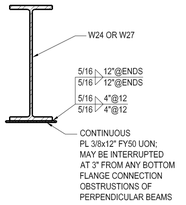

1 BOTTOM FLANGE REINFORCEMENT
SCALE: 1" = 1'-0"

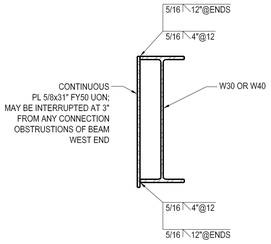

2 SIDE PLATE REINFORCEMENT
SCALE: 1" = 1'-0"

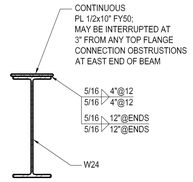

3 TOP FLANGE REINFORCEMENT
SCALE: 1" = 1'-0"

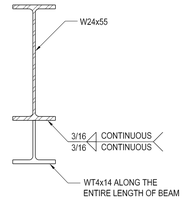

4 BOTTOM REINFORCEMENT WT
SCALE: 1" = 1'-0"

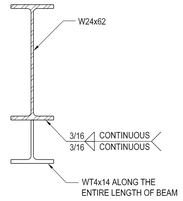

5 BOTTOM REINFORCEMENT WT
SCALE: 1" = 1'-0"

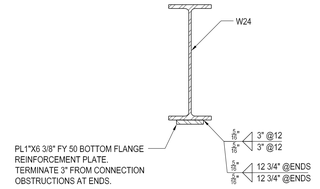

6 BOTTOM FLANGE REINFORCEMENT PLATE
SCALE: 1" = 1'-0"

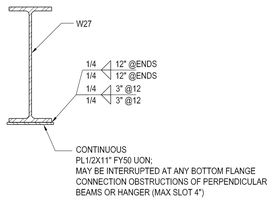

7 BOTTOM FLANGE REINFORCEMENT
SCALE: 1" = 1'-0"

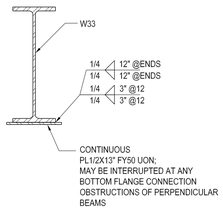

8 BOTTOM FLANGE REINFORCEMENT
SCALE: 1" = 1'-0"

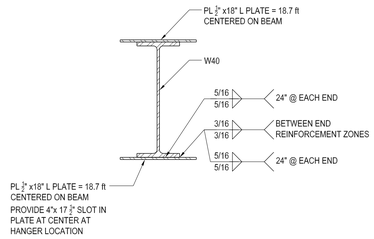

9 TOP AND BOTTOM FLANGE REINFORCEMENT PLATES
SCALE: 1" = 1'-0"

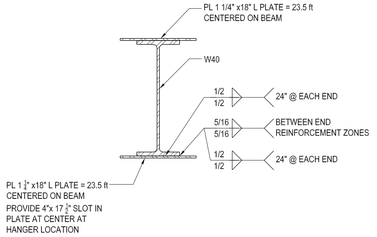

10 TOP AND BOTTOM FLANGE REINFORCEMENT PLATES
SCALE: 1" = 1'-0"

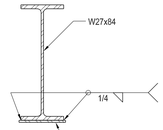

11 BOTTOM FLANGE REINFORCEMENT PLATE
SCALE: 1" = 1'-0"

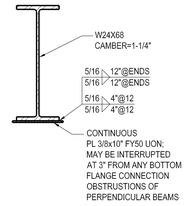

NOTE: CONTRACTOR HAS OPTION TO UPSIZE MEMBER TO W24X76 (CAMBER =1-1/2", STUDS=93) IN PLACE OF ADDING REINFORCEMENT PLATE TO W24X68

12 BOTTOM FLANGE REINFORCEMENT
SCALE: 1" = 1'-0"

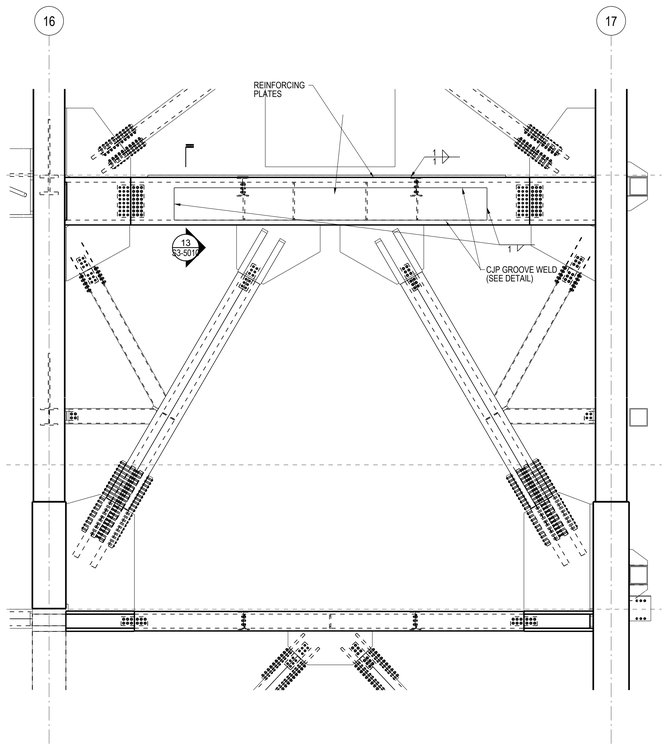

DETAIL 12
S1-0303D

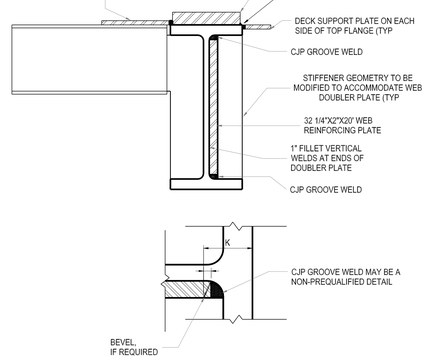

13 WEB DOUBLER PLATE CJP GROOVE-WELDED DETAIL
SCALE: 1" = 1'-0"

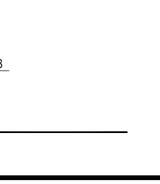

14 BOTTOM FLANGE REINFORCEMENT
SCALE: 1" = 1'-0"

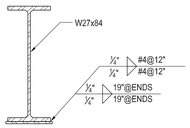

15 BOTTOM FLANGE REINFORCEMENT PLATE
SCALE: 1" = 1'-0"

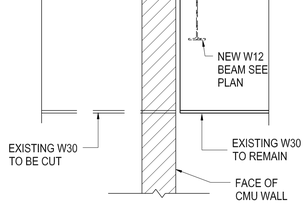

16 BEAM DETAIL AT CMU WALL
SCALE: 3/4" = 1'-0"

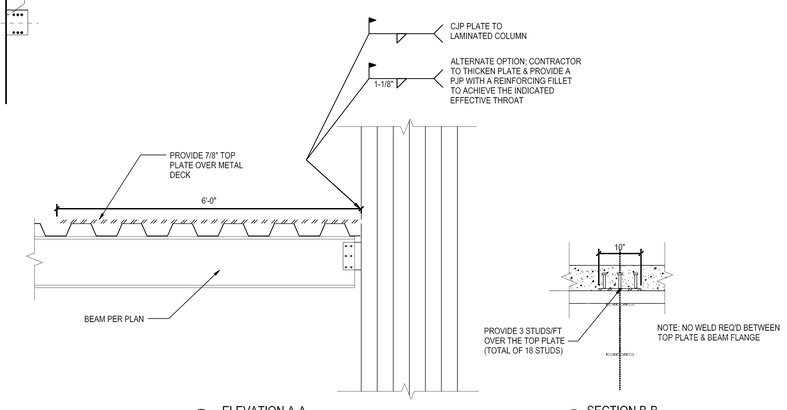

ELEVATION A-A

SECTION B-B

19 DECK REINFORCEMENT PLATE
SCALE: 1" = 1'-0"

HUDSON YARDS - RETAIL PODIUM AND TOWER A

500 WEST 33RD STREET
New York, NY

Client
Related Companies
60 Columbus Circle
New York, NY 10023
TEL: 212.801.1000 FAX: 212.801.1048

Oxford Properties Group
320 Park Avenue, 17th Floor
New York, NY 10022
TEL: 212.986.7514 FAX: 212.986.7510

Architect
Kohn Pedersen Fox Associates
11 West 42nd Street
New York, New York 10036
TEL: 212.977.6500 FAX: 212.956.2526

Structural Engineer
Thornton Tomasetti, Inc.
51 Madison Avenue
New York, New York 10010
TEL: 917.661.7800 FAX: 718.661.7801

Mechanical, Electrical, Plumbing, Fire Protection
Jaros Baum & Bolles Consulting Engineers
80 Pine Street
New York, NY 10013
TEL: 212.530.9300 FAX: 212.269.5894

Retail Interior Design & Planning
Elkus-Manfredi
300 A Street
Boston, MA 02210
TEL: 617.426.1300

No.	Description	Date
1	D.O.B AMENDMENT #2	10/15/2016

Key Plan

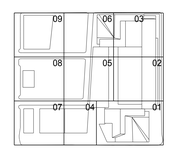

Issue Date 10/15/2016
Project No. N11328.00
Drawn By
Sheet Number

HYE-TA-S3-5010
Drawing Title

Damian Titus
APPROVED
Under Directive 2 of 1975
AMENDED APPLICATION
Date: 05/03/2017
NYC Development Hub

TOWER A
SECTIONS AND DETAILS

Drawing Number
S3-5010
X-Scan Drawing Number
S-565.00

SHEET 277 OF 443

© 2013 KOHN PEDERSEN FOX ASSOCIATES PC. All rights reserved.

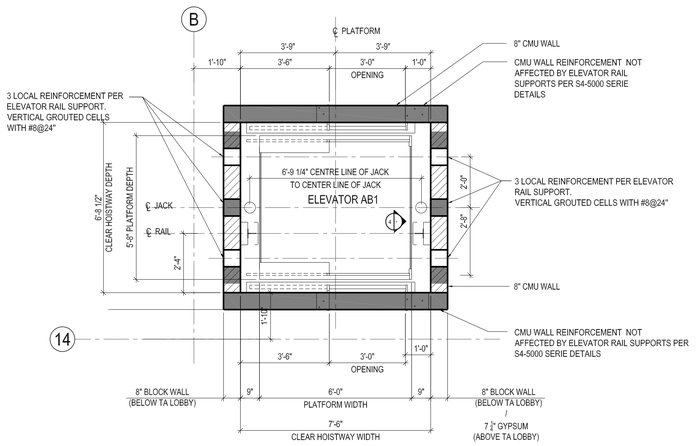

NOTE:
PLAN DIMENSIONS FROM ELEVATOR MANUFACTURE SHOP DRAWING.
ELEVATOR MANUFACTOR TO VERIFY

1 12(AB1) CMU WALL REINFORCEMENT. PLAN EL. 32'-2" TO EL. 49'-8"
NOT TO SCALE

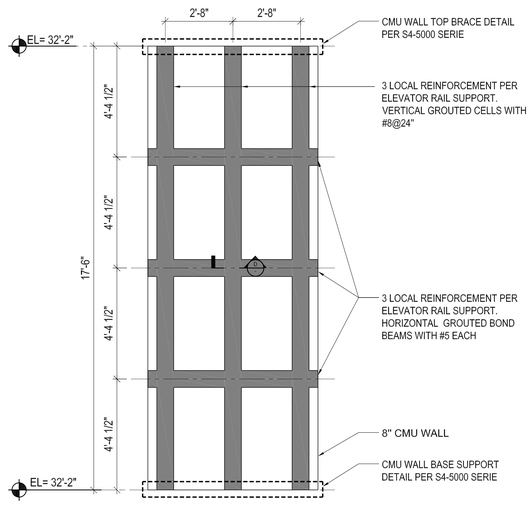

2 12(AB1) CMU WALL REINFORCEMENT. ELEVATION 1 EL. 32'-2" TO EL. 49'-8"
NOT TO SCALE

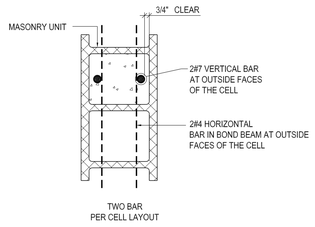

SECTION A
105(SB1) CMU WALL INFORCEMENT.

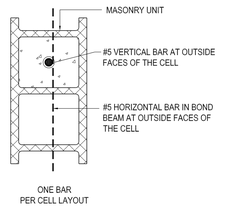

SECTION C
105(SB1) CMU WALL REINFORCEMENT.

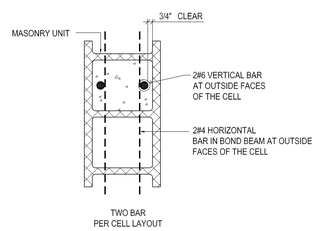

SECTION B
105(SB1) CMU WALL REINFORCEMENT.

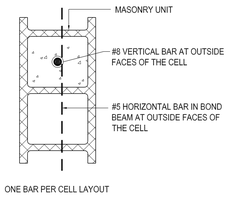

SECTION D
105(SB1) CMU WALL REINFORCEMENT

Damian Titus
Buildings
APPROVED
Under Directive 2 of 1975
MUNICIPAL REGULATION
Date: 05/03/2017
NYC Development Hub

HUDSON YARDS - RETAIL PODIUM AND TOWER A
500 WEST 33RD STREET
New York, NY

Client
Related Companies
60 Columbus Circle
New York, NY 10023
TEL: 212.801.1000 FAX: 212.801.1048

Oxford Properties Group
320 Park Avenue, 17th Floor
New York, NY 10022
TEL: 212.986.7514 FAX: 212.986.7510

Architect
Kohn Pedersen Fox Associates
11 West 42nd Street
New York, New York 10036
TEL: 212.977.6500 FAX: 212.956.2526

Structural Engineer
Thornton Tomasetti, Inc.
51 Madison Avenue
New York, New York 10010
TEL: 917.661.7800 FAX: 718.661.7801

Mechanical, Electrical, Plumbing, Fire Protection
Jaros Baum & Bolles Consulting Engineers
80 Pine Street
New York, NY 10013
TEL: 212.530.9300 FAX: 212.269.5894

Retail Interior Design & Planning
Elkus-Manfredi
300 A Street
Boston, MA 02210
TEL: 617.426.1300

No	Description	Date
1	D.O.B AMENDMENT #2	10/15/2016

Key Plan

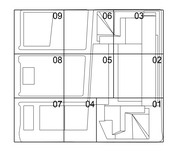

Issue Date 10/15/2016
Project No. N11328.00
Drawn By
Sheet Number

HYE-TA-S3-6144
Drawing Title

ELEVATOR DETAILS

Drawing Number
S3-6144
Kohn Drawing Number
S-566.00

© 2013 KOHN PEDERSEN FOX ASSOCIATES PC. All rights reserved.

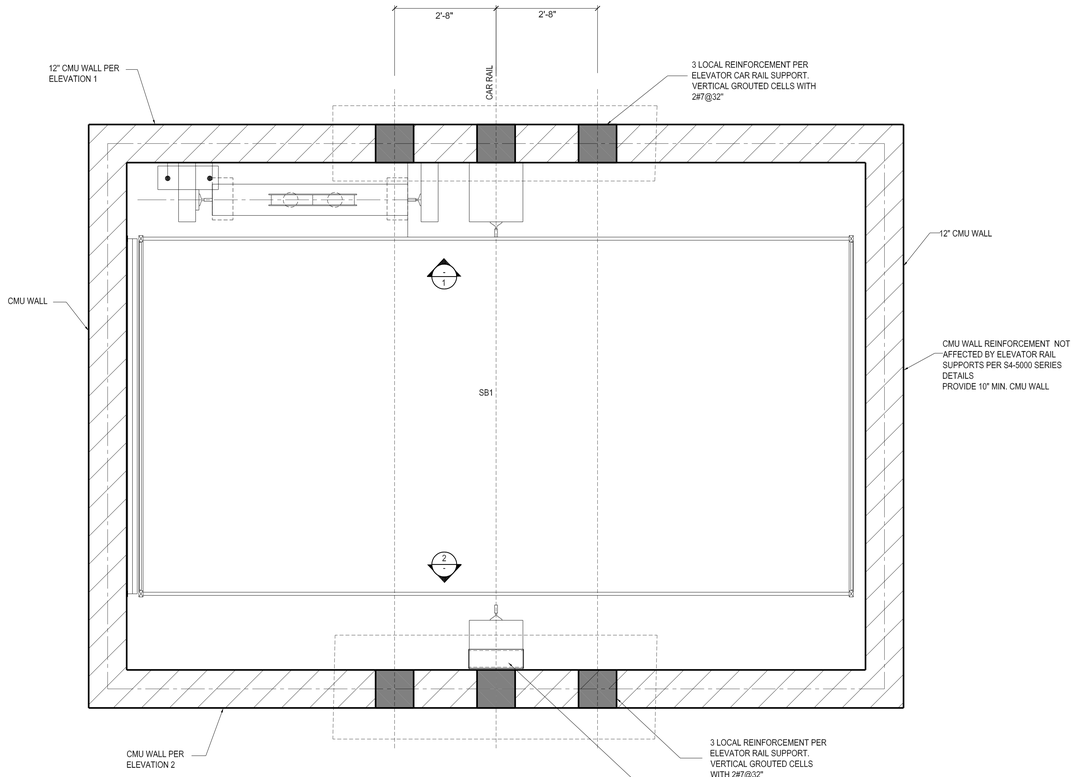

1 105(SB1) CMU WALL REINFORCEMENT. PLAN - PLATFORM TO LEVEL 2
NOT TO SCALE

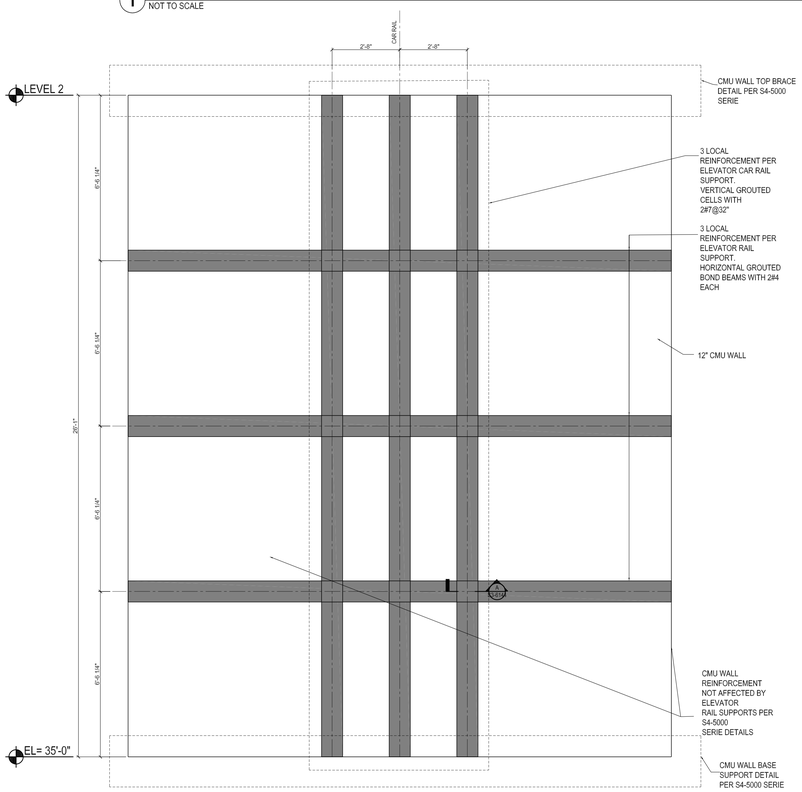

1 105(SB1) CMU WALL REINFORCEMENT. ELEVATION 1 - PLATFORM TO LEVEL 2
NOT TO SCALE

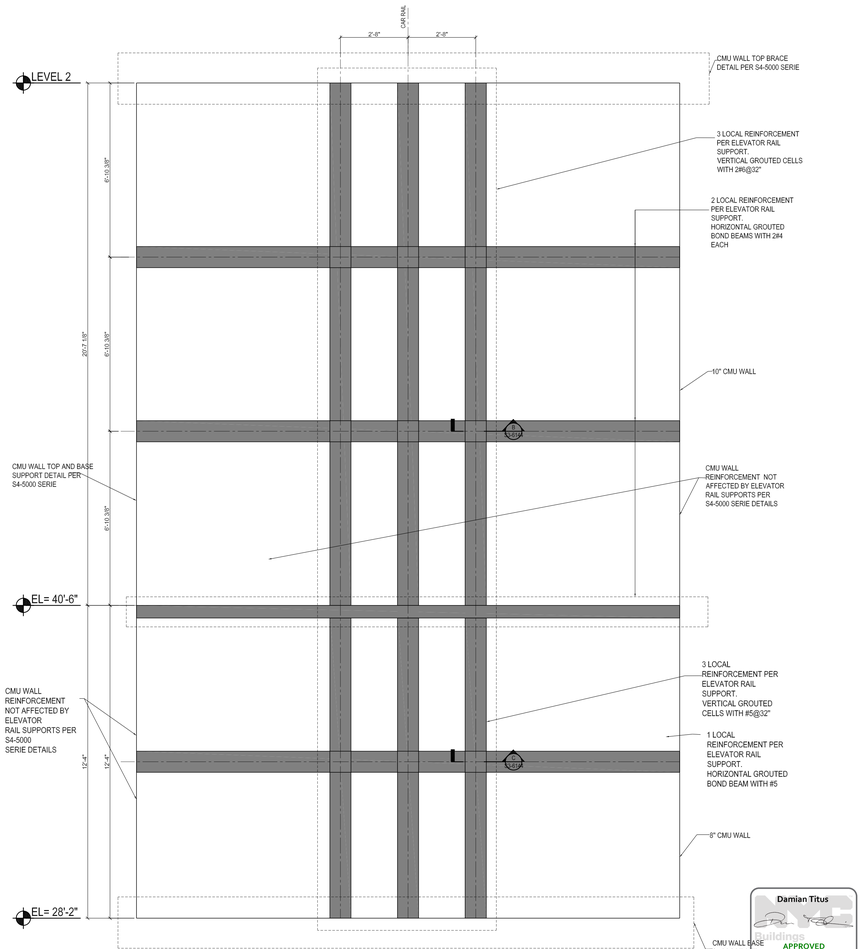

3 105(SB1) CMU WALL REINFORCEMENT. ELEVATION 2 - PLATFORM TO LEVEL 2
NOT TO SCALE

HUDSON YARDS - RETAIL PODIUM AND TOWER A

500 WEST 33RD STREET
New York, NY

Client
Related Companies
60 Columbus Circle
New York, NY 10023
TEL: 212.801.1000 FAX: 212.801.1048

Oxford Properties Group
320 Park Avenue, 17th Floor
New York, NY 10022
TEL: 212.986.7514 FAX: 212.986.7510

Architect
Kohn Pedersen Fox Associates
11 West 42nd Street
New York, New York 10036
TEL: 212.977.6500 FAX: 212.956.2526

Structural Engineer
Thornton Tomasetti, Inc.
51 Madison Avenue
New York, New York 10010
TEL: 917.661.7800 FAX: 718.661.7801

Mechanical, Electrical, Plumbing, Fire Protection
Jaros Baum & Bolles Consulting Engineers
80 Pine Street
New York, NY 10013
TEL: 212.530.9300 FAX: 212.269.5894

Retail Interior Design & Planning
Elkus-Manfredi
300 A Street
Boston, MA 02210
TEL: 617.426.1300

No.	Description	Date
1	D.O.B AMENDMENT #2	10/15/2016

Key Plan

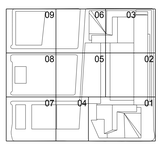

Issue Date 10/15/2016
Project No. N11328.00
Drawn By
Sheet Number

HYE-TA-S3-6145
Drawing Title

ELEVATOR DETAILS

Drawing Number
S3-6145
Revision Drawing Number
S-567.00

SHEET 322 OF 443

Damian Titus
Buildings
APPROVED
Under Directive 2 of 1975
AMENDED APPLICATION
Date 05/01/2017
NYC Development Hub

© 2013 KOHN PEDERSEN FOX ASSOCIATES PC. All rights reserved.

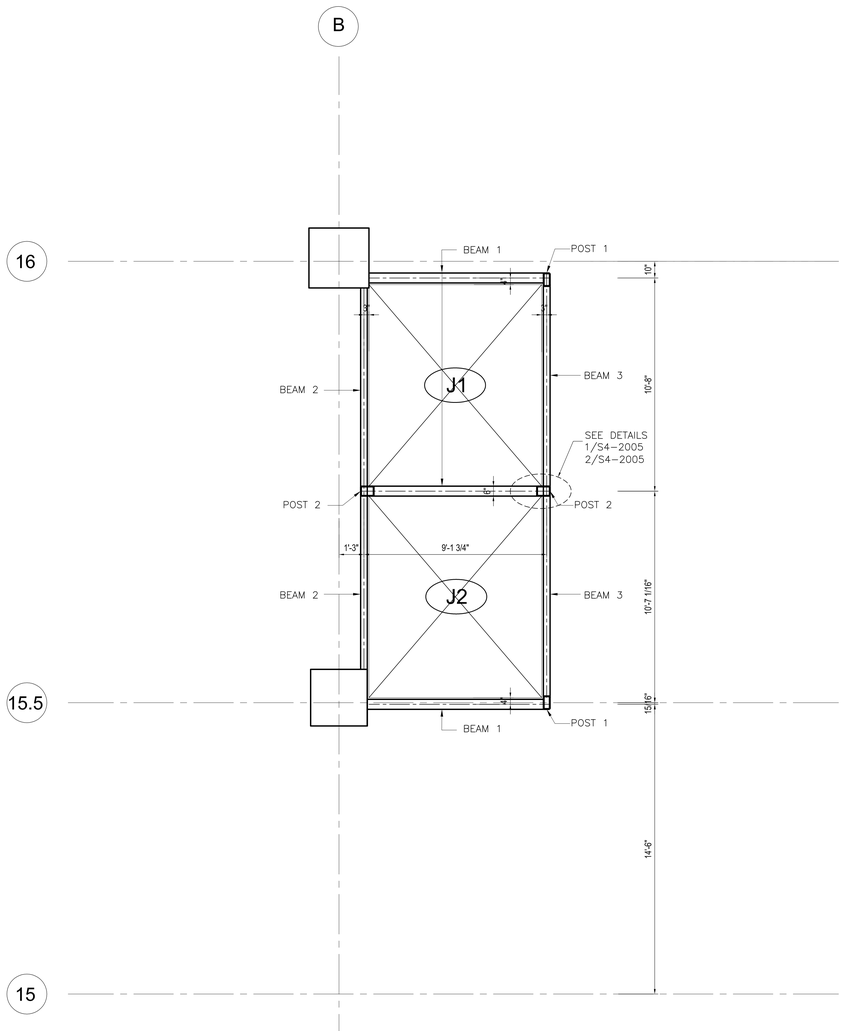

1 **ELEVATOR INTERMEDIATE RAIL SUPPORT PLAN - LEVELS 4 AND 5**
SCALE: 3/8" = 1'-0"

LEVEL 3 TO 4		
STEEL BEAM AND POST SCHEDULE		
MARK	SIZE	T/STEEL ELEVATION
BEAM1	HSS 10x6x1/2	88'-6"
BEAM2	HSS 8x4x1/4	88'-6"
BEAM3	HSS 8x4x5/16	88'-6"
POST 1	HSS 8X4X3/8	-
POST 2	HSS 8x6x3/8	-

LEVEL 4 TO 5		
STEEL BEAM AND POST SCHEDULE		
MARK	SIZE	T/STEEL ELEVATION
BEAM1	HSS 10x6x1/2	104'-8 1/4"
BEAM2	HSS 8x4x1/4	107'-4"
BEAM3	HSS 8x4x5/16	104'-8 1/4"
POST 1	HSS 8X4X3/8	-
POST 2	HSS 8x6x3/8	-

LEVEL 5 TO 6		
STEEL BEAM AND POST SCHEDULE		
MARK	SIZE	T/STEEL ELEVATION
BEAM1	HSS 10x6x1/2	122'-7"
BEAM2	HSS 8x4x1/4	125'-4"
BEAM3	HSS 8x4x5/16	122'-7"
POST 1	HSS 8X4X3/8	-
POST 2	HSS 8x6x3/8	-

RAIL SUPPPORT FORCES PROVIDED BY OTIS 3/25/2015

CALCULATED (Lbs)		
		J1-J2
		CAR
R1	SAFETY	1076
R1	RUNNING	----
R2	LOADING	79
Vx	SEISMIC	4691
Vy	SEISMIC	2346
		CWT.
R1	SAFETY	1690
R1	RUNNING	----
R2	LOADING	133
Vx	SEISMIC	4933
Vy	SEISMIC	2467

Damian Titus
Buildings
APPROVED
Under Directive 2 of 1975
AMENDED APPLICATION
Date: 05/03/2017
NYC Development Hub

HUDSON YARDS - RETAIL PODIUM AND TOWER A
500 WEST 33RD STREET
New York, NY

Client
Related Companies
60 Columbus Circle
New York, NY 10023
TEL: 212.801.1000 FAX: 212.801.1048

Oxford Properties Group
320 Park Avenue, 17th Floor
New York, NY 10022
TEL: 212.986.7514 FAX: 212.986.7510

Architect
Kohn Pedersen Fox Associates
11 West 42nd Street
New York, New York 10036
TEL: 212.977.6500 FAX: 212.956.2526

Structural Engineer
Thornton Tomasetti, Inc.
51 Madison Avenue
New York, New York 10010
TEL: 917.661.7800 FAX: 718.661.7801

Mechanical, Electrical, Plumbing, Fire Protection
Jaros Baum & Bolles Consulting Engineers
80 Pine Street
New York, NY 10013
TEL: 212.530.9300 FAX: 212.269.5894

Retail Interior Design & Planning
Elkus-Manfredi
300 A Street
Boston, MA 02210
TEL: 617.426.1300

No.	Description	Date
1	D.O.B. AMENDMENT #2	10/15/2016

Key Plan

Issue Date: 10/15/2016
Project No. N11328.00
Drawn By Author
Sheet Number

STATE OF NEW YORK
SHAHAEL J. SHAHAEL
Registered Professional Engineer

Drawing Title
TOWER A ELEVATOR INTERMEDIATE SUPPORT PART PLANS BANK J1-J2 I
Drawing Number
S3-6201
B-Scan Drawing Number
S-568.00

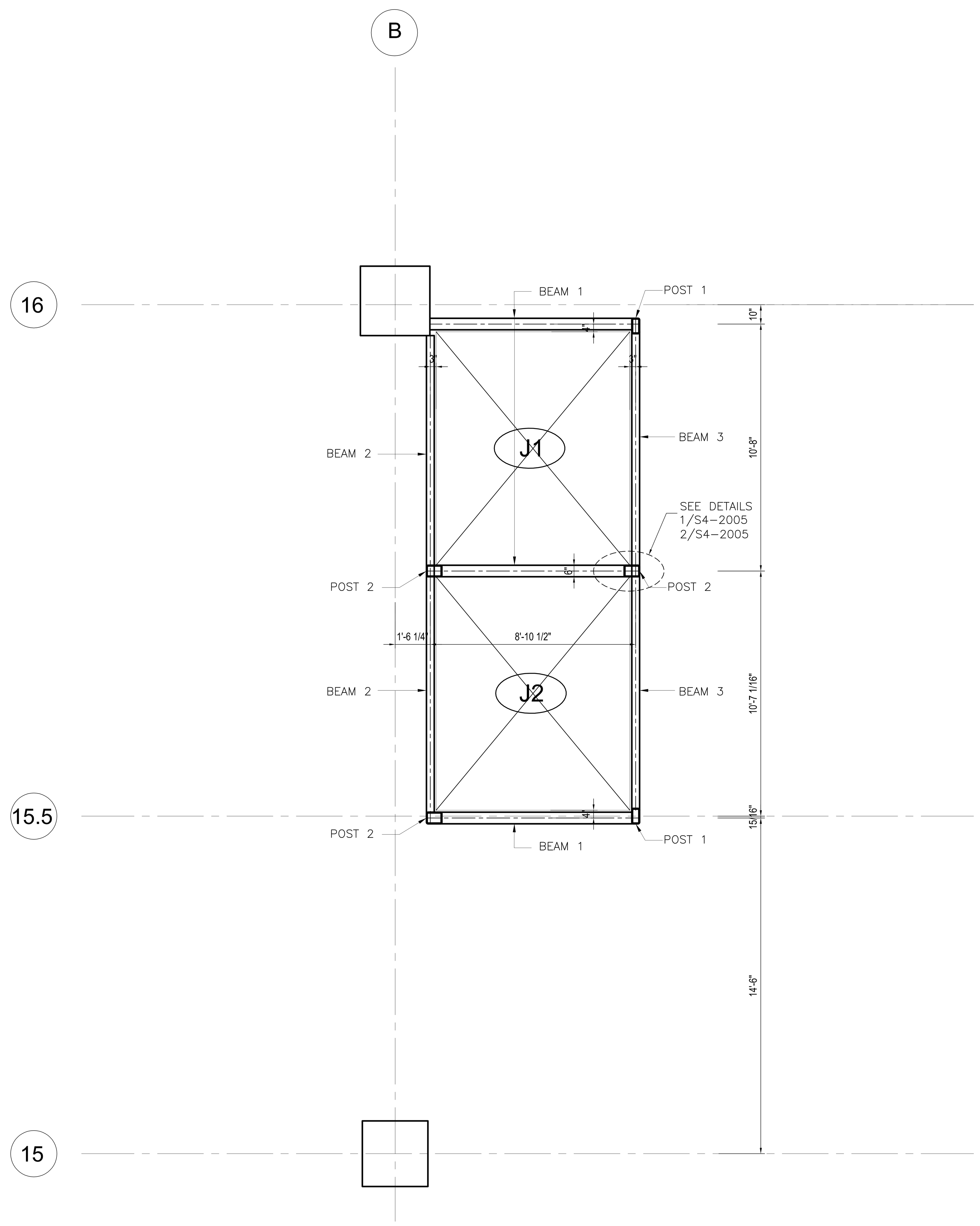

1 ELEVATOR INTERMEDIATE RAIL SUPPORT PLAN - LEVELS 6 TO 70

SCALE: 3/8" = 1'-0"

LEVEL 65 TO 66			
STEEL BEAM AND POST SCHEDULE			
MARK	SIZE	T/STEEL ELEVATION	
BEAM1	HSS 10x6x1/2	1087'-10"	1097'-10"
BEAM2	HSS 8x4x1/4	1087'-10"	1097'-10"
BEAM3	HSS 8x4x5/16	1087'-10"	1097'-10"
POST 1	HSS 14X4X3/8	-	-
POST 2	HSS 10x6x1/2	-	-

LEVEL 67 TO 68		
STEEL BEAM AND POST SCHEDULE		
MARK	SIZE	T/STEEL ELEVATION
BEAM1	HSS 10x6x1/2	1142'-8 1/2"
BEAM2	HSS 8x4x1/4	1142'-4"
BEAM3	HSS 8x4x5/16	1142'-8 1/2"
POST 1	HSS 8X4X3/8	-
POST 2	HSS 8x6x3/8	-

LEVEL 68 TO 69		
STEEL BEAM AND POST SCHEDULE		
MARK	SIZE	T/STEEL ELEVATION
BEAM1	HSS 10x6x1/2	1160'-10 1/2"
BEAM2	HSS 8x4x1/4	1160'-4"
BEAM3	HSS 8x4x5/16	1160'-10 1/2"
POST 1	HSS 14X4X3/8	-
POST 2	HSS 10x6x1/2	-

LEVEL 69 TO 70		
STEEL BEAM AND POST SCHEDULE		
MARK	SIZE	T/STEEL ELEVATION
BEAM1	HSS 10x6x1/2	1179'-5"
BEAM2	HSS 8x4x1/4	1179'-5"
BEAM3	HSS 8x4x5/16	1179'-5"
POST 1	HSS 8X4X3/8	-
POST 2	HSS 8x6x3/8	-

LEVEL 6 TO 8			
STEEL BEAM AND POST SCHEDULE			
MARK	SIZE	T/STEEL ELEVATION	
BEAM1	HSS 10x6x1/2	143'-4"	155'-9"
BEAM2	HSS 8x4x1/4	143'-4"	155'-9"
BEAM3	HSS 8x4x5/16	143'-4"	155'-9"
POST 1	HSS 14X4X3/8	-	
POST 2	HSS 10x6x1/2	-	

LEVEL 8 TO 10			
STEEL BEAM AND POST SCHEDULE			
MARK	SIZE	T/STEEL ELEVATION	
BEAM1	HSS 10x6x1/2	179'-4"	191'-8"
BEAM2	-	-	-
BEAM3	HSS 8x4x5/16	179'-4"	191'-8"
POST 1	HSS 14X4X3/8	-	
POST 2	HSS 10x6x1/2	-	

NOTE: BECAUSE OF THE CONCRETE HARDENING WALL FROM LEVEL 8 TO 10, NO POSTS AND BEAMS ARE REQUIRED AT GRIDLINES B AND 16. ALL BEAMS ARE CONNECTED TO WALL PER DETAIL 3/S4-2005

LEVEL 10 TO 11		
STEEL BEAM AND POST SCHEDULE		
MARK	SIZE	T/STEEL ELEVATION
BEAM1	HSS 10x6x1/2	212'-8 3/4"
BEAM2	HSS 8x4x1/4	215'-4"
BEAM3	HSS 8x4x5/16	212'-8 3/4"
POST 1	HSS 8X4X3/8	-
POST 2	HSS 8x6x3/8	-

LEVEL 11 TO 12		
STEEL BEAM AND POST SCHEDULE		
MARK	SIZE	T/STEEL ELEVATION
BEAM1	HSS 10x6x1/2	230'-10 1/2"
BEAM2	HSS 8x4x1/4	233'-4"
BEAM3	HSS 8x4x5/16	230'-10 1/2"
POST 1	HSS 8X4X3/8	-
POST 2	HSS 8x6x3/8	-

LEVEL 12 TO 13		
STEEL BEAM AND POST SCHEDULE		
MARK	SIZE	T/STEEL ELEVATION
BEAM1	HSS 10x6x1/2	248'-10 1/2"
BEAM2	HSS 8x4x1/4	251'-4"
BEAM3	HSS 8x4x5/16	248'-10 1/2"
POST 1	HSS 8X4X3/8	-
POST 2	HSS 8x6x3/8	-

LEVEL 13 TO 14		
STEEL BEAM AND POST SCHEDULE		
MARK	SIZE	T/STEEL ELEVATION
BEAM1	HSS 10x6x1/2	266'-11 1/2"
BEAM2	HSS 8x4x1/4	269'-4"
BEAM3	HSS 8x4x5/16	266'-11 1/2"
POST 1	HSS 8X4X3/8	-
POST 2	HSS 8x6x3/8	-

LEVEL 14 TO 15		
STEEL BEAM AND POST SCHEDULE		
MARK	SIZE	T/STEEL ELEVATION
BEAM1	HSS 10x6x1/2	285'-1/2"
BEAM2	HSS 8x4x1/4	288'-0"
BEAM3	HSS 8x4x5/16	285'-1/2"
POST 1	HSS 8X4X3/8	-
POST 2	HSS 8x6x3/8	-

LEVEL 15 TO 16		
STEEL BEAM AND POST SCHEDULE		
MARK	SIZE	T/STEEL ELEVATION
BEAM1	HSS 10x6x1/2	302'-11 1/2"
BEAM2	HSS 8x4x1/4	306'-2"
BEAM3	HSS 8x4x5/16	302'-11 1/2"
POST 1	HSS 8X4X3/8	-
POST 2	HSS 8x6x3/8	-

LEVEL 16 TO 17		
STEEL BEAM AND POST SCHEDULE		
MARK	SIZE	T/STEEL ELEVATION
BEAM1	HSS 10x6x1/2	320'-11 1/2"
BEAM2	HSS 8x4x1/4	323'-4"
BEAM3	HSS 8x4x5/16	320'-11 1/2"
POST 1	HSS 8X4X3/8	-
POST 2	HSS 8x6x3/8	-

LEVEL 17 TO 18		
STEEL BEAM AND POST SCHEDULE		
MARK	SIZE	T/STEEL ELEVATION
BEAM1	HSS 10x6x1/2	338'-11 1/2"
BEAM2	HSS 8x4x1/4	342'-2"
BEAM3	HSS 8x4x5/16	338'-11 1/2"
POST 1	HSS 8X4X3/8	-
POST 2	HSS 8x6x3/8	-

LEVEL 18 TO 19		
STEEL BEAM AND POST SCHEDULE		
MARK	SIZE	T/STEEL ELEVATION
BEAM1	HSS 10x6x1/2	356'-11 1/2"
BEAM2	HSS 8x4x1/4	359'-4"
BEAM3	HSS 8x4x5/16	356'-11 1/2"
POST 1	HSS 8X4X3/8	-
POST 2	HSS 8x6x3/8	-

LEVEL 19 TO 20		
STEEL BEAM AND POST SCHEDULE		
MARK	SIZE	T/STEEL ELEVATION
BEAM1	HSS 10x6x1/2	373'-5 1/2"
BEAM2	HSS 8x4x1/4	378'-2"
BEAM3	HSS 8x4x5/16	373'-5 1/2"
POST 1	HSS 8X4X3/8	-
POST 2	HSS 8x6x3/8	-

LEVEL 20 TO 21		
STEEL BEAM AND POST SCHEDULE		
MARK	SIZE	T/STEEL ELEVATION
BEAM1	HSS 10x6x1/2	388'-11 3/4"
BEAM2	HSS 8x4x1/4	388'-11 3/4"
BEAM3	HSS 8x4x5/16	388'-11 3/4"
POST 1	HSS 8X4X3/8	-
POST 2	HSS 8x6x3/8	-

LEVEL 21 TO 22			
STEEL BEAM AND POST SCHEDULE			
MARK	SIZE	T/STEEL ELEVATION	
BEAM1	HSS 10x6x1/2	409'-1"	421'-1"
BEAM2	HSS 8x4x1/4	409'-1"	421'-1"
BEAM3	HSS 8x4x5/16	409'-1"	421'-1"
POST 1	HSS 14X4X3/8	-	-
POST 2	HSS 10x6x1/2	-	-

LEVEL 22 TO 23		
STEEL BEAM AND POST SCHEDULE		
MARK	SIZE	T/STEEL ELEVATION
BEAM1	HSS 10x6x1/2	442'-2 3/4"
BEAM2	HSS 8x4x1/4	442'-2 3/4"
BEAM3	HSS 8x4x5/16	442'-2 3/4"
POST 1	HSS 8X4X3/8	-
POST 2	HSS 8x6x3/8	-

LEVEL 23 TO 24		
STEEL BEAM AND POST SCHEDULE		
MARK	SIZE	T/STEEL ELEVATION
BEAM1	HSS 10x6x1/2	460'-4 1/2"
BEAM2	HSS 8x4x1/4	460'-4 1/2"
BEAM3	HSS 8x4x5/16	460'-4 1/2"
POST 1	HSS 8X4X3/8	-
POST 2	HSS 8x6x3/8	-

LEVEL 24 TO 25		
STEEL BEAM AND POST SCHEDULE		
MARK	SIZE	T/STEEL ELEVATION
BEAM1	HSS 10x6x1/2	478'-5 1/2"
BEAM2	HSS 8x4x1/4	478'-5 1/2"
BEAM3	HSS 8x4x5/16	478'-5 1/2"
POST 1	HSS 8X4X3/8	-
POST 2	HSS 8x6x3/8	-

LEVEL 38 TO 39		
STEEL BEAM AND POST SCHEDULE		
MARK	SIZE	T/STEEL ELEVATION
BEAM1	HSS 10x6x1/2	670'-3 3/4"
BEAM2	HSS 8x4x1/4	670'-3 3/4"
BEAM3	HSS 8x4x5/16	670'-3 3/4"
POST 1	HSS 8X4X3/8	-
POST 2	HSS 8x6x3/8	-

LEVEL 39 TO 40			
STEEL BEAM AND POST SCHEDULE			
MARK	SIZE	T/STEEL ELEVATION	
BEAM1	HSS 10x6x1/2	687'-7"	697'-7"
BEAM2	HSS 8x4x1/4	687'-7"	697'-7"
BEAM3	HSS 8x4x5/16	687'-7"	697'-7"
POST 1	HSS 14X4X3/8	-	-
POST 2	HSS 10x6x1/2	-	-

LEVEL 59 TO 60		
STEEL BEAM AND POST SCHEDULE		
MARK	SIZE	T/STEEL ELEVATION
BEAM1	HSS 10x6x1/2	971'-9 3/4"
BEAM2	HSS 8x4x1/4	971'-9 3/4"
BEAM3	HSS 8x4x5/16	971'-9 3/4"
POST 1	HSS 8X4X3/8	-
POST 2	HSS 8x6x3/8	-

LEVEL 60 TO 61			
STEEL BEAM AND POST SCHEDULE			
MARK	SIZE	T/STEEL ELEVATION	
BEAM1	HSS 10x6x1/2	989'-1"	999'-1"
BEAM2	HSS 8x4x1/4	989'-1"	999'-1"
BEAM3	HSS 8x4x5/16	989'-1"	999'-1"
POST 1	HSS 14X4X3/8	-	-
POST 2	HSS 10x6x1/2	-	-

LEVEL 61 TO 62		
STEEL BEAM AND POST SCHEDULE		
MARK	SIZE	T/STEEL ELEVATION
BEAM1	HSS 10x6x1/2	1021'-1 3/16"
BEAM2	HSS 8x4x1/4	1021'-1 3/16"
BEAM3	HSS 8x4x5/16	1021'-1 3/16"
POST 1	HSS 14X4X3/8	-
POST 2	HSS 10x6x1/2	-

LEVEL 64 TO 65		
STEEL BEAM AND POST SCHEDULE		
MARK	SIZE	T/STEEL ELEVATION
BEAM1	HSS 10x6x1/2	1070'-9 3/4"
BEAM2	HSS 8x4x1/4	1070'-9 3/4"
BEAM3	HSS 8x4x5/16	1070'-9 3/4"
POST 1	HSS 8X4X3/8	-
POST 2	HSS 8x6x3/8	-

LEVEL 66 TO 67		
STEEL BEAM AND POST SCHEDULE		
MARK	SIZE	T/STEEL ELEVATION
BEAM1	HSS 10x6x1/2	1117'-11 1/2"
BEAM2	HSS 8x4x1/4	1117'-11 1/2"
BEAM3	HSS 8x4x5/16	1117'-11 1/2"
POST 1	HSS 14X4X3/8	-
POST 2	HSS 10x6x1/2	-

DEPT OF BLDGS 121186251 Job Number
ES894705120 Scan Code

HUDSON YARDS - RETAIL PODIUM AND TOWER A

500 WEST 33RD STREET
New York, NY

Client
Related Companies
60 Columbus Circle
New York, NY 10023
TEL: 212.801.1000 FAX: 212.801.1048

Oxford Properties Group
320 Park Avenue, 17th Floor
New York, NY 10022
TEL: 212.986.7514 FAX: 212.986.7510

Architect
Kohn Pedersen Fox Associates
11 West 42nd Street
New York, New York 10036
TEL: 212.977.6500 FAX: 212.956.2526

Structural Engineer
Thornton Tomasetti, Inc.
51 Madison Avenue
New York, New York 10010
TEL: 917.661.7800 FAX: 718.661.7801

Mechanical, Electrical, Plumbing, Fire Protection
Jaros Baum & Bolles Consulting Engineers
80 Pine Street
New York, NY 10013
TEL: 212.530.9300 FAX: 212.269.5894

Retail Interior Design & Planning
Elkus-Manfredi
300 A Street
Boston, MA 02210
TEL: 617.426.1300

No.	Description	Date
1	D.O.B. AMENDMENT #2	10/15/2016

Key Plan

Issue Date: 10/15/2016
Project No. N11328.00
Drawn By Author
Sheet Number

STATE OF NEW YORK · MICHAEL J. SQUARZINI · LICENSED PROFESSIONAL ENGINEER

Damian Titus
Buildings
APPROVED
Under Directive 2 of 1975
AMENDED APPLICATION
Date: 05/03/2017
NYC Development Hub

Drawing Title
TOWER A ELEVATOR INTERMEDIATE SUPPORT PART PLANS BANK J1-J2 II

Drawing Number
S3-6202

B-Scan Drawing Number
S-569.00 SHEET 324 OF 443

© 2013 KOHN PEDERSEN FOX ASSOCIATES PC. All rights reserved.

DEPT OF BLDGS ATTACHED Job Number
E5014453705 Scan Code

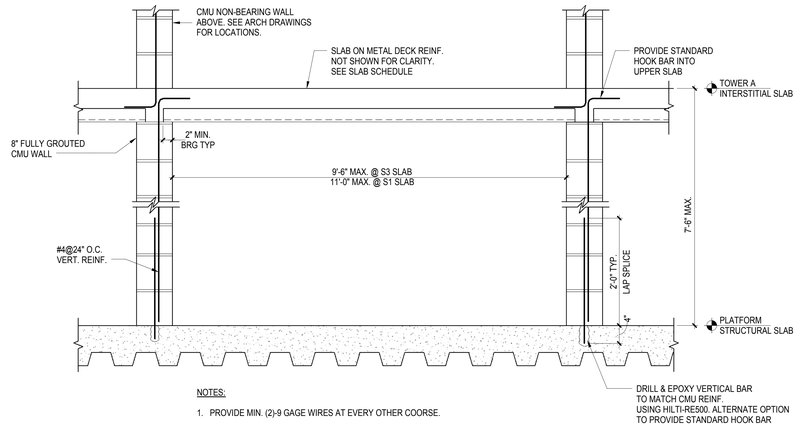

NOTES:

1. PROVIDE MIN. (2)-9 GAGE WIRES AT EVERY OTHER COORSE.
2. VERTICAL REINFORCEMENT TO BE SECURED WITH WIRE POSITIONERS ETC AT INTERVALS NOT TO EXCEED 1/8" AND BE LOCATED AT THE CENTER OF THE WALL UON.
3. SEE ADDITIONAL DETAILS FOR ADDITIONAL REINF. AT OPENINGS AND JOINTS.

1 TYPICAL DETAIL AT SLAB ON METAL DECK SUPPORTED ON CMU WALLS
1" = 1'-0"

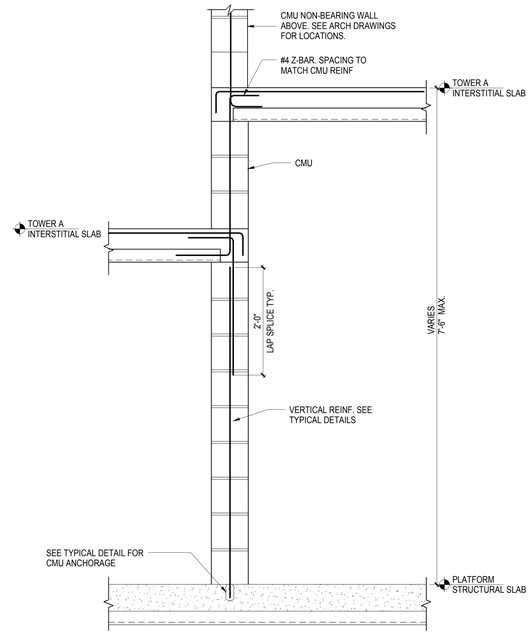

2 TYPICAL DETAIL AT TOWER A INTERSTITIAL STEP IN SLAB
1" = 1'-0"

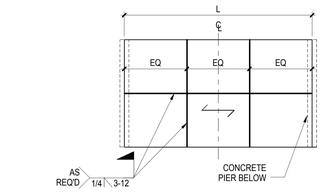

TYPICAL SPLICE SECTION

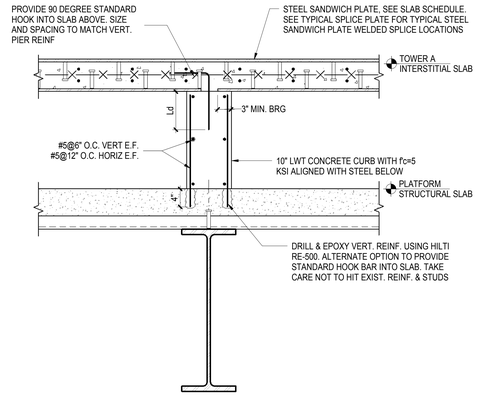

3 TYPICAL DETAIL AT STEEL SANDWICH PLATE SUPPORTED ON CONCRETE PIERS
1" = 1'-0"

LINTEL SCHEDULE				
MAXIMUM MASONRY OPENING 'L'	8" THICK WALL			
	100 PSF LL		250 PSF LL	
	LINTEL MINIMUM DEPTH	1ST COURSE REINF	LINTEL MINIMUM DEPTH	1ST COURSE REINF
1'-0"	8	1 - # 4	8	1 - # 4
2'-0"	16	1 - # 4	16	1 - # 4
4'-0"	16	2 - # 4	24	2 - # 4
6'-0"	24	2 - # 5	32	2 - # 5
8'-0"	32	2 - # 5	40	2 - # 5
10'-0"	32	2 - # 6	48	2 - # 6

NOTES:

1. MASONRY LINTELS SHALL BE SHORED DURING CONSTRUCTION AND SHALL REMAIN SHORED UNTIL MASONRY HAS GAINED 100% OF FULL SPECIFIED STRENGTH (f'm)
2. DESIGN BASED ON TOWER A DESIGN LOADS AT INTERSTITIAL LEVEL ONLY
3. SEE TYPICAL CMU BEARING WALL ELEVATIONS FOR ADDITIONAL INFORMATION

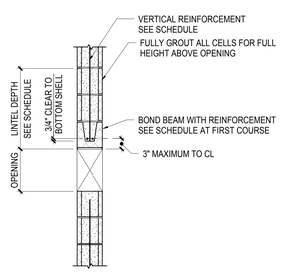

TYPICAL MASONRY SECTION AT OPENING

MAXIMUM MASONRY OPENING 'L'	8" THICK WALL	
	LINTEL	
	100 PSF LL	250 PSF LL
2'-0"	2L - 3 x 3 x 1/4 LLV	2L - 3 x 3 x 3/8 LLV
4'-0"	2L - 3.5 x 3 x 3/8 LLV	2L - 4 x 3 x 3/8 LLV
5'-0"	2L - 4 x 3 x 1/2 LLV	2L - 5 x 3 x 1/2 LLV
6'-0"	2L - 5 x 3 x 1/2 LLV	2L - 6 x 3 x 1/2 LLV
8'-0"	2L - 6 x 3.5 x 1/2 LLV	W8X21
10'-0"	W8X21	W8X28
12'-0"	W8X28	W8X31

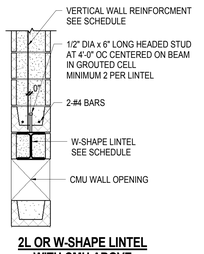

2L OR W-SHAPE LINTEL WITH CMU ABOVE

NOTES:

1. LINTEL ANGLES SHALL BE ASTM A36 STEEL MINIMUM. W SHAPES SHALL BE ASTM A992.
2. NO MORE THAN SIX COURSES OF CMU MAY BE PLACED, REINFORCED, GROUTED AND CURED AT ONE TIME ABOVE LINTEL BEFORE PROCEEDING FURTHER.
3. PROVIDE MINIMUM 8" BEARING EACH END.
4. 2L LINTELS SHALL BE WELDED OR BOLTED TOGETHER AT INTERVALS NOT EXCEEDING 2'-0" OC, WITH A MINIMUM OF TWO CONNECTIONS BETWEEN ENDS.
5. AT EXTERIOR WALL SYSTEMS AND AT HUMID LOCATIONS LINTELS SHALL BE GALVANIZED, REFER TO SPECIFICATIONS FOR FURTHER INFORMATION.
6. SEE ARCHITECTURAL DRAWINGS FOR FIREPROOFING REQUIREMENTS.

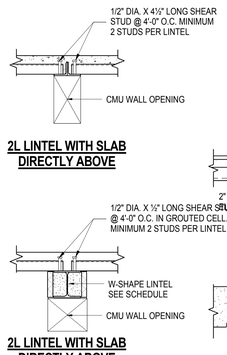

2L LINTEL WITH SLAB DIRECTLY ABOVE

2L LINTEL WITH SLAB DIRECTLY ABOVE

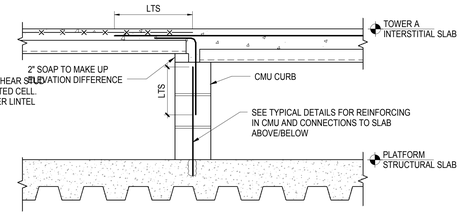

4 TYPICAL CMU SILL AND LINTEL SCHEDULE AT BEARING WALL
NOT TO SCALE

5 TYPICAL STEEL LINTEL SCHEDULE AT BEARING WALL
NOT TO SCALE

6 TYPICAL DETAIL AT SLAB ON METAL DECK BEARING ON CMU WALL AT DECK TRANSITION
1" = 1'-0"

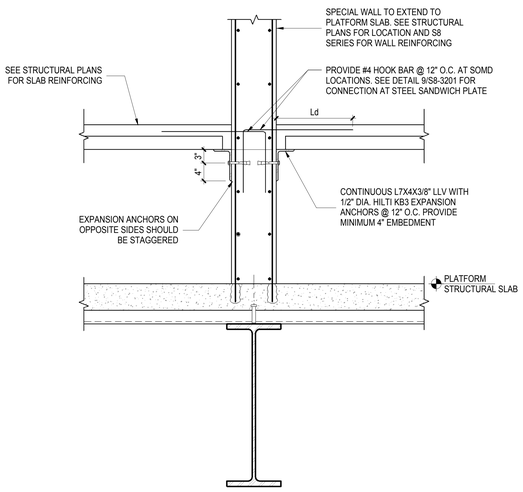

7 TYPICAL DETAIL AT SPECIAL WALL CONDITIONS
1" = 1'-0"

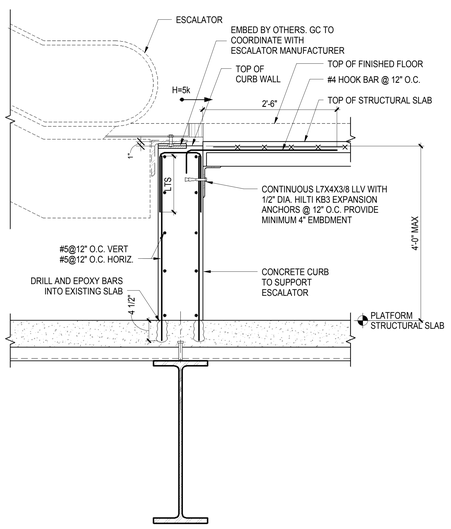

8 TYPICAL DETAIL AT CONCRETE CURBS SUPPORTING ESCALATORS
1" = 1'-0"

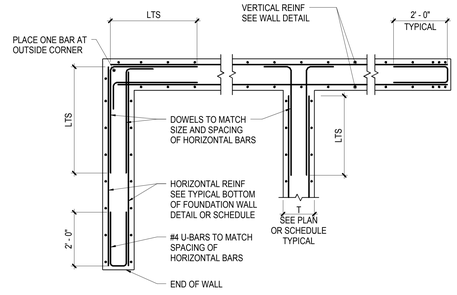

9 TYPICAL CONCRETE WALL DETAIL - PLAN
NOT TO SCALE

Damian Titus
Buildings
APPROVED
Under Directive 2 of 1975
MEANS OF APPLICATION
Date: 05/03/2017
NYC Development Hub

0 4' 8' 16'

N

HUDSON YARDS - RETAIL PODIUM AND TOWER A

500 WEST 33RD STREET
New York, NY

Client
Related Companies
60 Columbus Circle
New York, NY 10023
TEL: 212.801.1000 FAX: 212.801.1048

Oxford Properties Group
320 Park Avenue, 17th Floor
New York, NY 10022
TEL: 212.986.7514 FAX: 212.986.7510

Architect
Kohn Pedersen Fox Associates
11 West 42nd Street
New York, New York 10036
TEL: 212.977.6500 FAX: 212.956.2526

Structural Engineer
Thornton Tomasetti, Inc.
51 Madison Avenue
New York, New York 10010
TEL: 917.661.7800 FAX: 718.661.7801

Mechanical, Electrical, Plumbing, Fire Protection
Jaros Baum & Bolles Consulting Engineers
80 Pine Street
New York, NY 10013
TEL: 212.530.9300 FAX: 212.269.5894

Retail Interior Design & Planning
Elkus-Manfredi
300 A Street
Boston, MA 02210
TEL: 617.426.1300

No.	Description	Date
1	D.O.B. AMENDMENT #2	10/15/2016

Key Plan

Issue Date: 10/15/2016
Project No. N11328.00
Drawn By Author
Sheet Number HYE-TA-S3-8000
Drawing Title

TOWER A INTERSTITIAL LEVEL DETAILS

Drawing Number S3-8000
B-Scan Drawing Number S-572.00

DEPT OF BUILDINGS 121860/2015 Job Number
E1800263X01 Scan Code

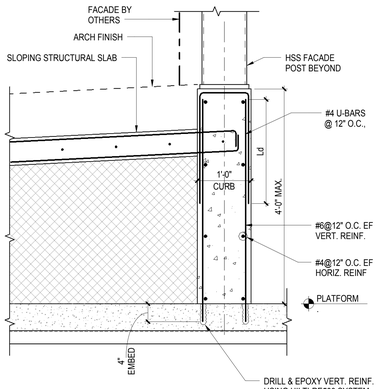

1 TYPICAL CURB DETAIL FOR FACADE SUPPORT ALONG 33RD STREET
1" = 1'-0"

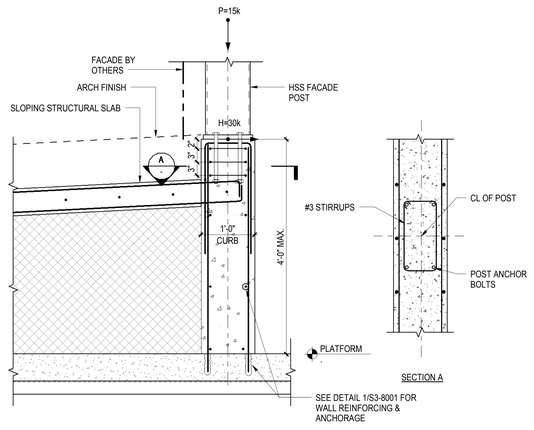

2 TYPICAL CURB DETAIL AT FACADE POST ALONG 33RD STREET
1" = 1'-0"

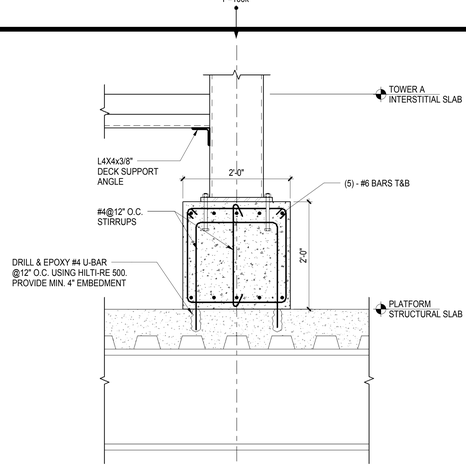

3 SECTION AT A.7/14.6 POST ABOVE
1" = 1'-0"

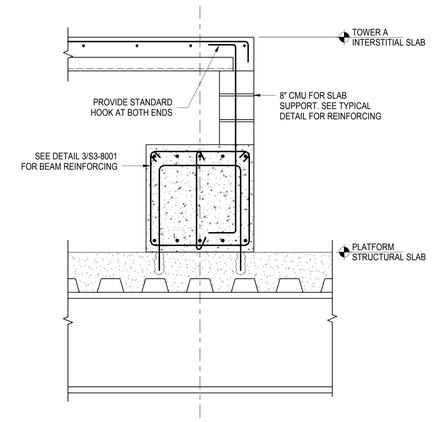

4 SECTION ADJACENT TO A.7/14.6 POST ABOVE
1" = 1'-0"

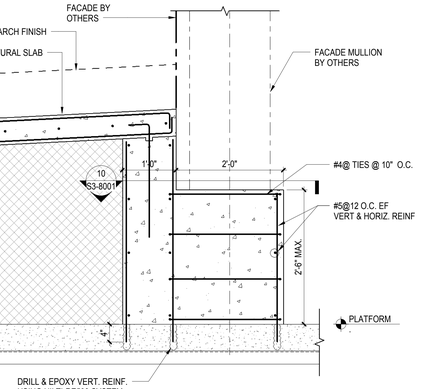

5 TYPICAL DETAIL AT NW CORNER GLASS FACADE
1" = 1'-0"

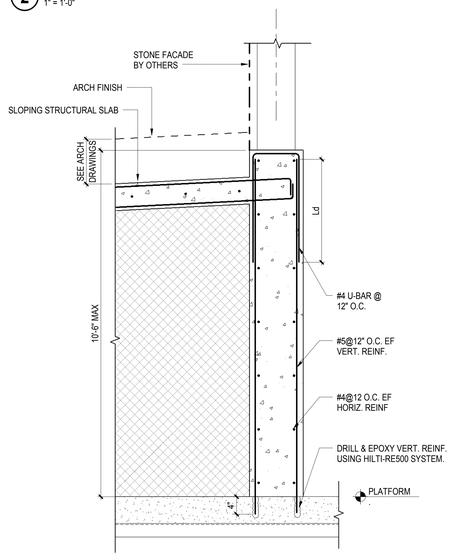

6 SECTION AT WEST FACE FACADE
1" = 1'-0"

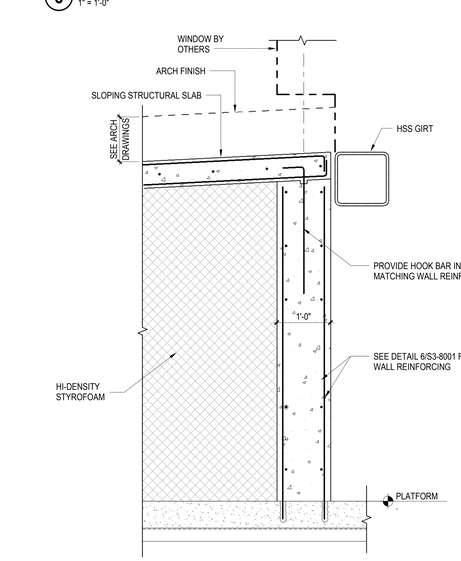

7 SECTION AT WEST FACE FACADE WINDOW
1" = 1'-0"

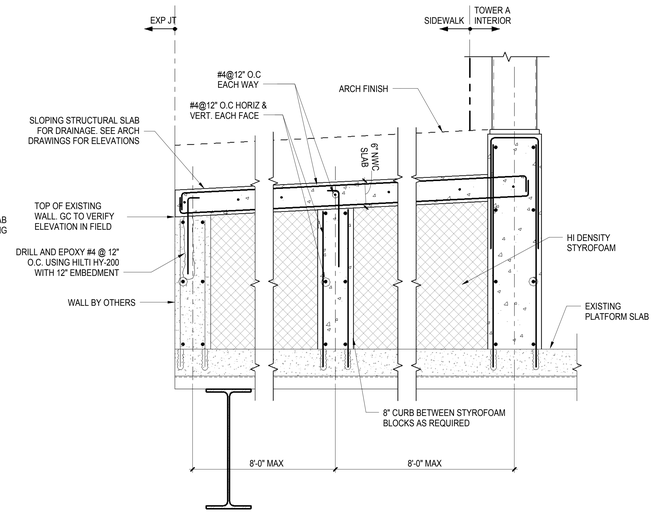

9 TYPICAL SLAB SUPPORTING SIDEWALK FINISHES
1" = 1'-0"

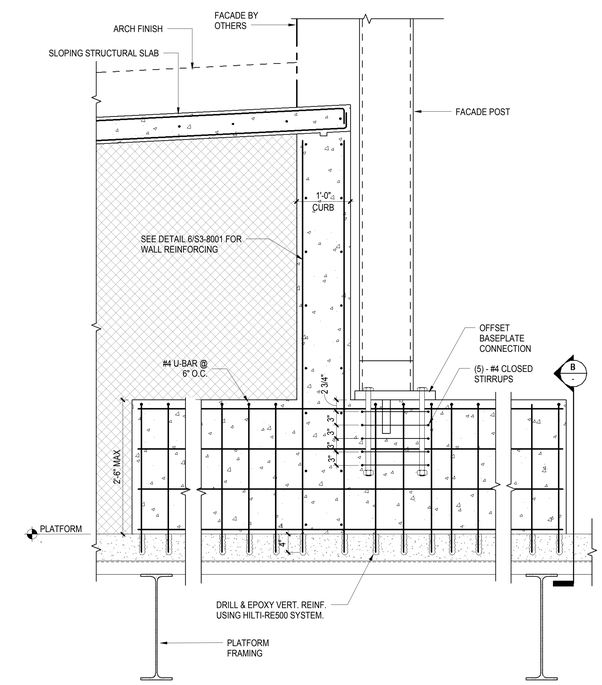

8 SECTION AT WEST FACE FACADE POST
1" = 1'-0"

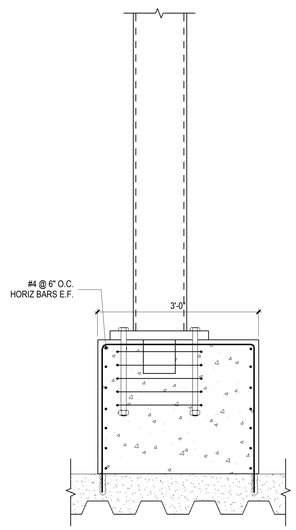

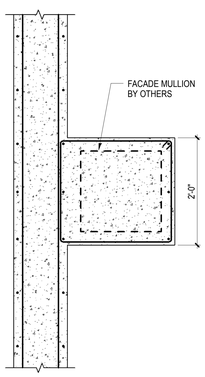

10 TYPICAL DETAIL AT NW CORNER GLASS FACADE
1" = 1'-0"

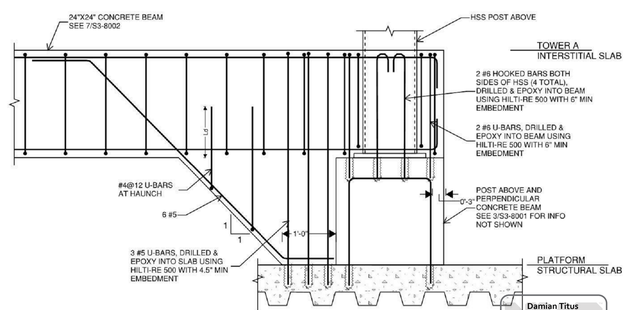

11 CONCRETE BEAM HAUNCHED INTERSECTION AT POST AT A.7/14.6
1" = 1'-0"

Damian Titus
APPROVED
Under Directive 2 of 1975
ADMINISTRATIVE BULLETIN
Date: 05/03/2017
NYC Development Hub

0 4' 8' 16'

N

HUDSON YARDS - RETAIL PODIUM AND TOWER A

500 WEST 33RD STREET
New York, NY

Client
Related Companies
60 Columbus Circle
New York, NY 10023
TEL: 212.801.1000 FAX: 212.801.1048

Oxford Properties Group
320 Park Avenue, 17th Floor
New York, NY 10022
TEL: 212.986.7514 FAX: 212.986.7510

Architect
Kohn Pedersen Fox Associates
11 West 42nd Street
New York, New York 10036
TEL: 212.977.6500 FAX: 212.956.2526

Structural Engineer
Thornton Tomasetti, Inc.
51 Madison Avenue
New York, New York 10010
TEL: 917.661.7800 FAX: 718.661.7801

Mechanical, Electrical, Plumbing, Fire Protection
Jaros Baum & Bolles Consulting Engineers
80 Pine Street
New York, NY 10013
TEL: 212.530.9300 FAX: 212.269.5894

Retail Interior Design & Planning
Elkus-Manfredi
300 A Street
Boston, MA 02210
TEL: 617.426.1300

No.	Description	Date
1	D.O.B. AMENDMENT #2	10/15/2016

Key Plan

Issue Date: 10/15/2016
Project No. N11328.00
Drawn By Author
Sheet Number HYE-TA-S3-8001

Drawing Title
TOWER A INTERSTITIAL LEVEL DETAILS

Drawing Number **S3-8001**
B-Scan Drawing Number S-573.00

SHEET 326 OF 443

© 2015 KOHN PEDERSEN FOX ASSOCIATES PC. All rights reserved.

DEPT OF BUILDINGS 421490253 Job Number
E164161289 Scan Code

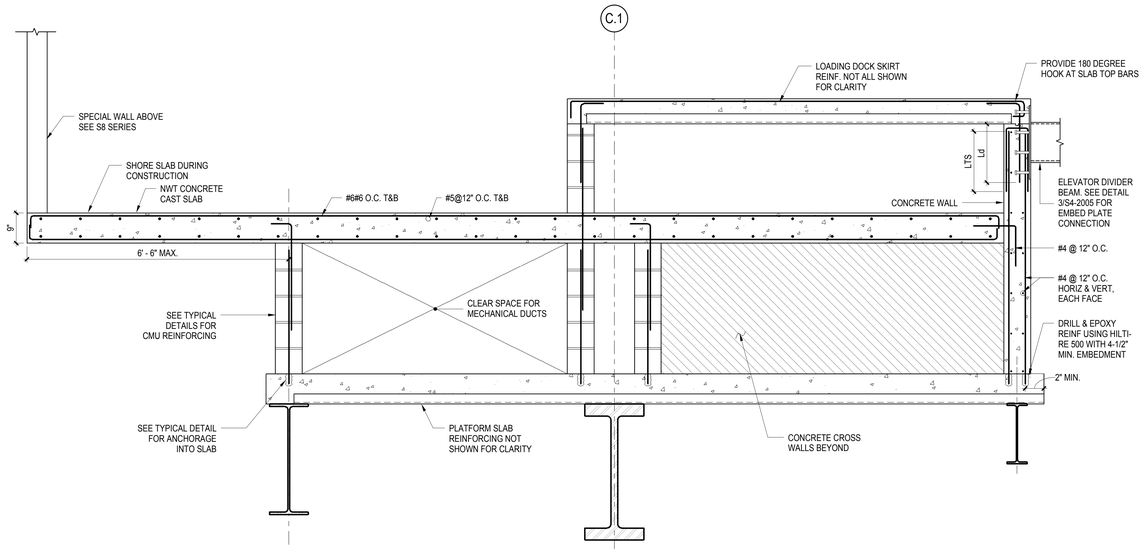

1 SECTION ADJACENT TO LIRR EGRESS HI/LO SLAB
3/4" = 1'-0"

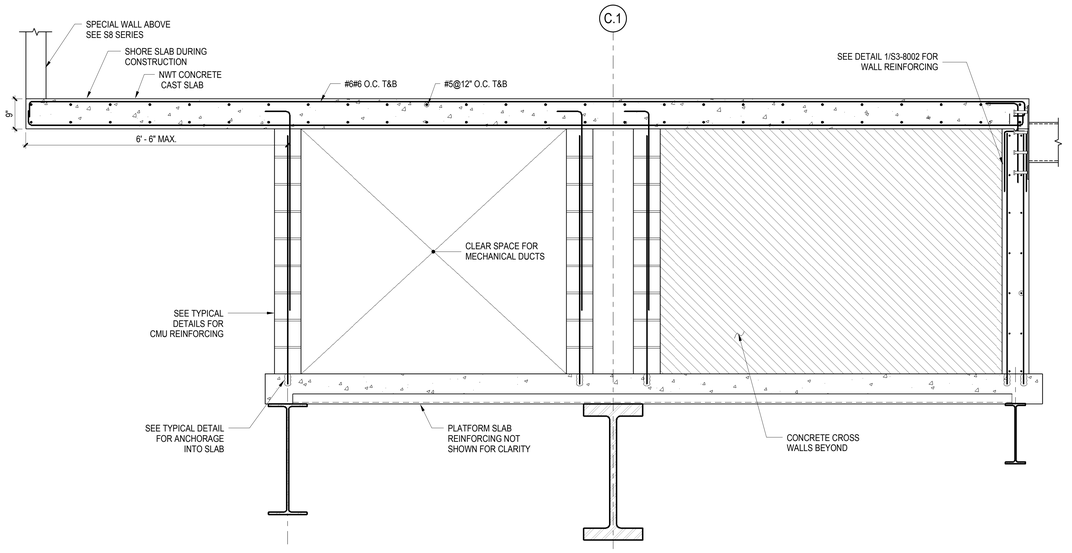

2 SECTION ADJACENT TO LIRR EGRESS HI SLAB
3/4" = 1'-0"

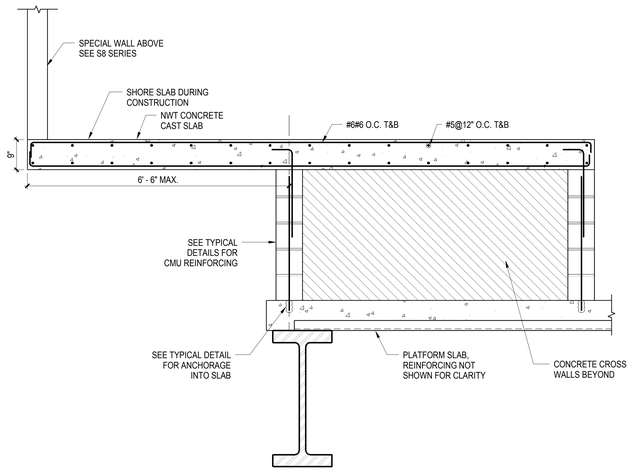

3 SECTION ADJACENT TO LIRR EGRESS STAIR LO SLAB
3/4" = 1'-0"

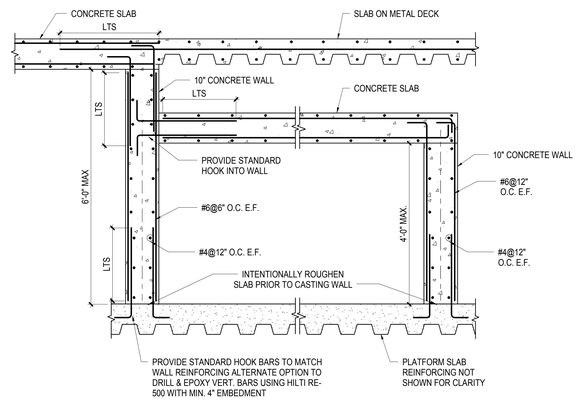

4 SECTION AT CROSS WALLS
3/4" = 1'-0"

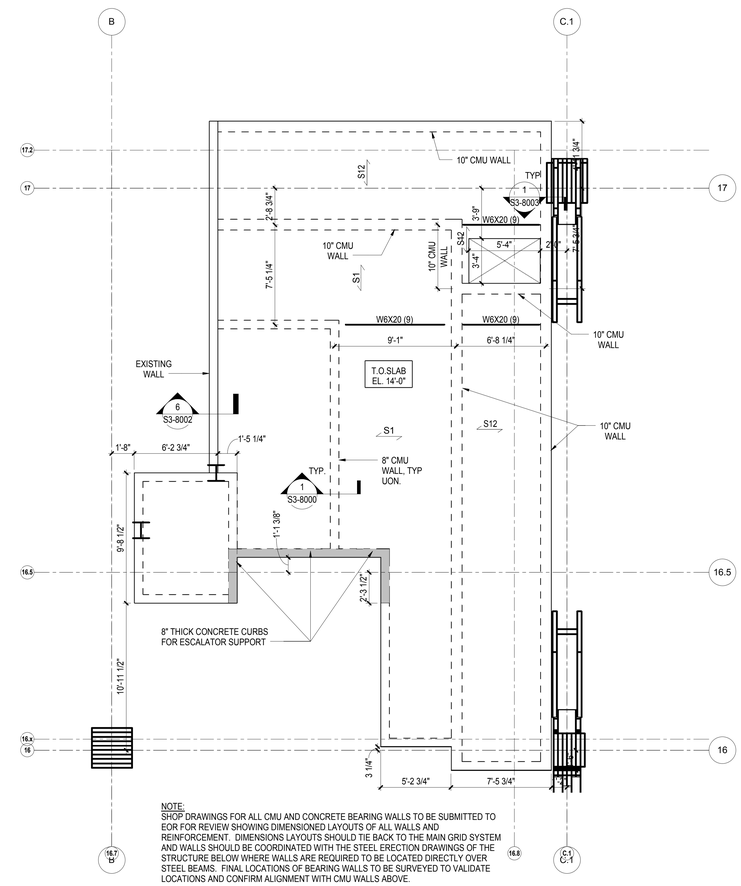

NOTE:
SHOP DRAWINGS FOR ALL CMU AND CONCRETE BEARING WALLS TO BE SUBMITTED TO EOR FOR REVIEW SHOWING DIMENSIONED LAYOUTS OF ALL WALLS AND REINFORCEMENT. DIMENSIONS LAYOUTS SHOULD TIE BACK TO THE MAIN GRID SYSTEM AND WALLS SHOULD BE COORDINATED WITH THE STEEL ERECTION DRAWINGS OF THE STRUCTURE BELOW WHERE WALLS ARE REQUIRED TO BE LOCATED DIRECTLY OVER STEEL BEAMS. FINAL LOCATIONS OF BEARING WALLS TO BE SURVEYED TO VALIDATE LOCATIONS AND CONFIRM ALIGNMENT WITH CMU WALLS ABOVE.

5 SUBWAY CONNECTION PART PLAN
1/4" = 1'-0"

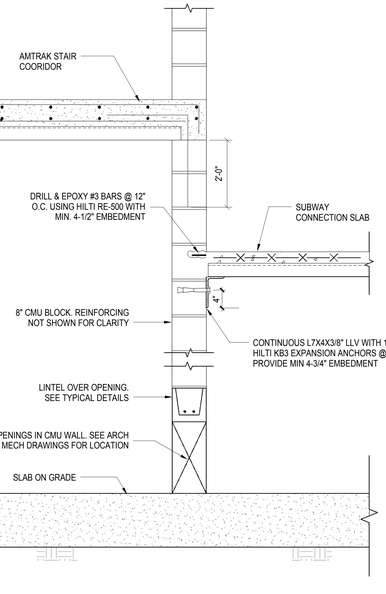

6 SECTION AT SUBWAY/AMTRAK CONNECTIONS
1" = 1'-0"

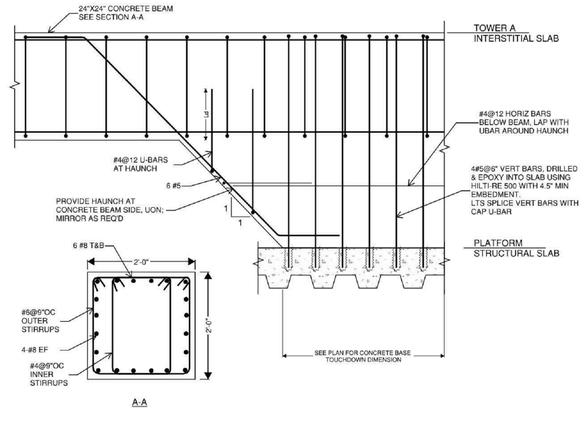

7 INTERSTITIAL CONCRE BEAM SUPPORTING STONE WALL AND HAUNCHED BASE CONNECTION TO PLATFORM SLAB
1" = 1'-0"

HUDSON YARDS - RETAIL PODIUM AND TOWER A

500 WEST 33RD STREET
New York, NY

Client
Related Companies
60 Columbus Circle
New York, NY 10023
TEL: 212.801.1000 FAX: 212.801.1048

Oxford Properties Group
320 Park Avenue, 17th Floor
New York, NY 10022
TEL: 212.986.7514 FAX: 212.986.7510

Architect
Kohn Pedersen Fox Associates
11 West 42nd Street
New York, New York 10036
TEL: 212.977.6500 FAX: 212.956.2526

Structural Engineer
Thornton Tomasetti, Inc.
51 Madison Avenue
New York, New York 10010
TEL: 917.661.7800 FAX: 718.661.7801

Mechanical, Electrical, Plumbing, Fire Protection
Jaros Baum & Bolles Consulting Engineers
80 Pine Street
New York, NY 10013
TEL: 212.530.9300 FAX: 212.269.5894

Retail Interior Design & Planning
Elkus-Manfredi
300 A Street
Boston, MA 02210
TEL: 617.426.1300

No.	Description	Date
1	D.O.B. AMENDMENT #2	10/15/2016

Key Plan

Issue Date: 10/15/2016
Project No. N11328.00
Drawn By Author
Sheet Number

HYE-TA-S3-8002

Drawing Title

Damian Titus
Buildings
APPROVED
Under Directive 1 of 1975
AMENDED APPLICATION
Date: 05/03/2017
NYC Development Hub

0 4' 8' 16'

TOWER A INTERSTITIAL LEVEL DETAILS

Drawing Number
S3-8002
Scan Drawing Number
S-574.00

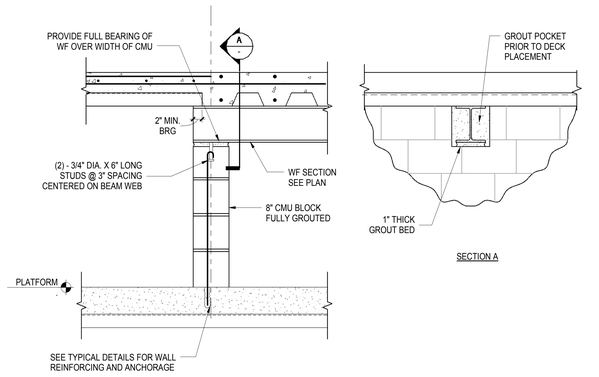

1 SECTION AT DECK PERPENDICULAR TO WF BEARING ON CMU WALL
1" = 1'-0"

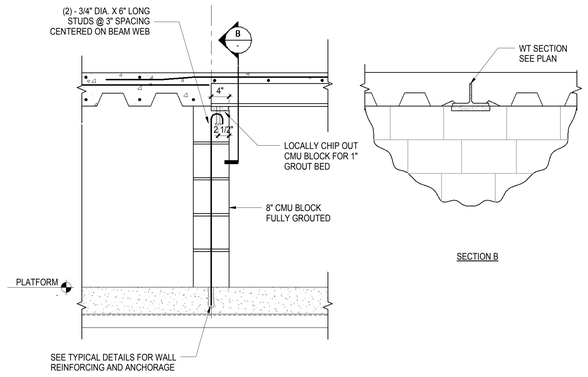

2 SECTION AT DECK PARALLEL TO WT BEARING ON CMU WALL
1" = 1'-0"

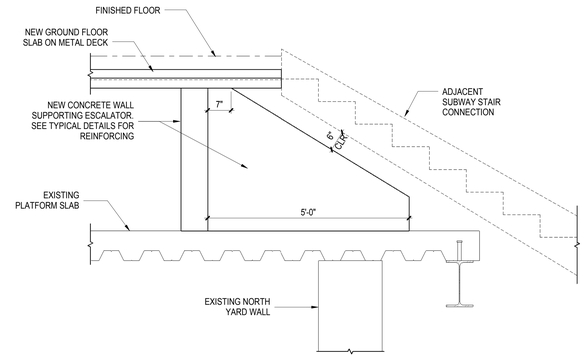

3 SECTION AT CONCRETE WALL ADJACENT TO SUBWAY ESCALATOR & STAIR
3/4" = 1'-0"

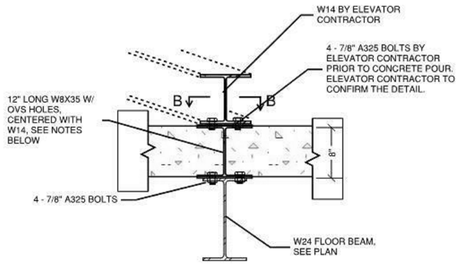

SECTION A-A

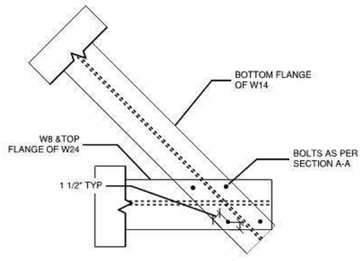

SECTION B-B

NOTES:
1. BUILT UP SECTIONS ARE NOT ALLOWED FOR W8X35; USE ROLLED SECTIONS ONLY.
2. STIFFENERS ARE NOT REQUIRED FOR W8.
3. USE SHIM PLATES IF NEEDED.

4 ELEVATOR SA4 DETAILS
1" = 1'-0"

5 ELEVATOR SA4 DETAILS
1" = 1'-0"

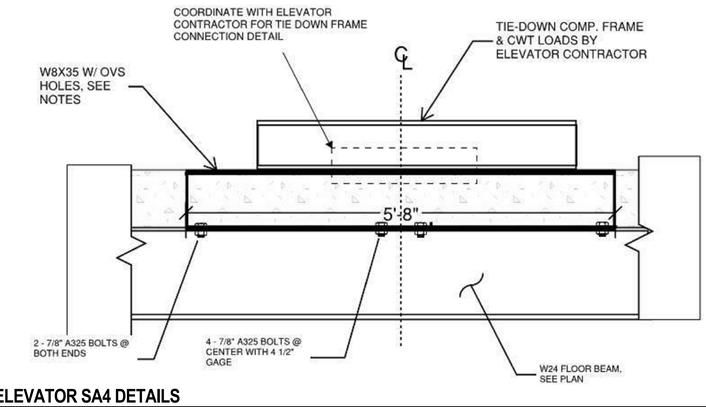

6 ELEVATOR SA4 DETAILS
1" = 1'-0"

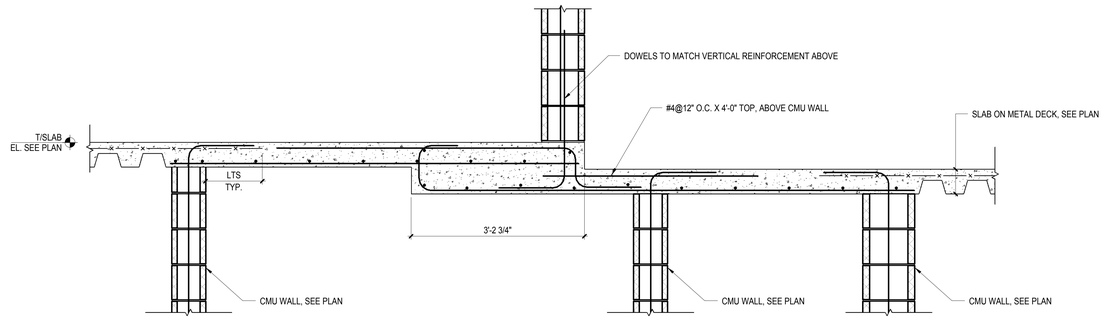

NOTES:
1.SEE DETAIL 4/S4-6001 FOR BALANCE INFORMATION.

7 SECTION AT DECK PARALLEL TO WT BEARING ON CMU WALL
1" = 1'-0"

HUDSON YARDS - RETAIL PODIUM AND TOWER A
500 WEST 33RD STREET
New York, NY

Client
Related Companies
60 Columbus Circle
New York, NY 10023
TEL: 212.801.1000 FAX: 212.801.1048

Oxford Properties Group
320 Park Avenue, 17th Floor
New York, NY 10022
TEL: 212.986.7514 FAX: 212.986.7510

Architect
Kohn Pedersen Fox Associates
11 West 42nd Street
New York, New York 10036
TEL: 212.977.6500 FAX: 212.956.2526

Structural Engineer
Thornton Tomasetti, Inc.
51 Madison Avenue
New York, New York 10010
TEL: 917.661.7800 FAX: 718.661.7801

Mechanical, Electrical, Plumbing, Fire Protection
Jaros Baum & Bolles Consulting Engineers
80 Pine Street
New York, NY 10013
TEL: 212.530.9300 FAX: 212.269.5894

Retail Interior Design & Planning
Elkus-Manfredi
300 A Street
Boston, MA 02210
TEL: 617.426.1300

No.	Description	Date
1	D.O.B. AMENDMENT #2	10/15/2016

Key Plan

Issue Date: 10/15/2016
Project No. N11328.00
Drawn By Author
Sheet Number

HYE-TA-S3-8003
Drawing Title

TOWER A INTERSTITIAL LEVEL DETAILS

Drawing Number
S3-8003
Relase Drawing Number
S-575.00

SHEET 328 OF 443

Damian Titus
Buildings
APPROVED
Under Directive 2 of 1975
AMENDED APPLICATION
Date: 05/03/2017
NYC Development Hub

0 4' 8' 16'

© 2013 KOHN PEDERSEN FOX ASSOCIATES PC. All rights reserved.

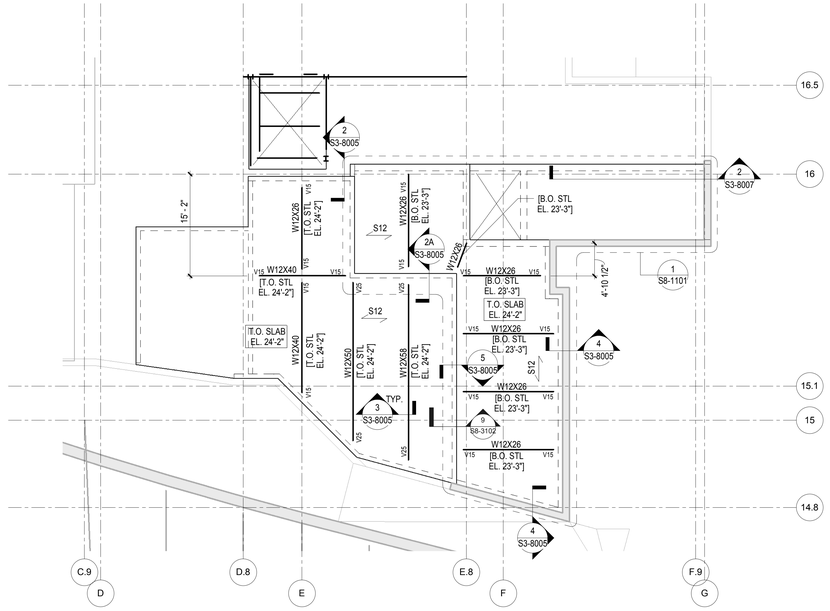

1 PART PLAN AT TA CELLAR LIDS
1/8" = 1'-0"

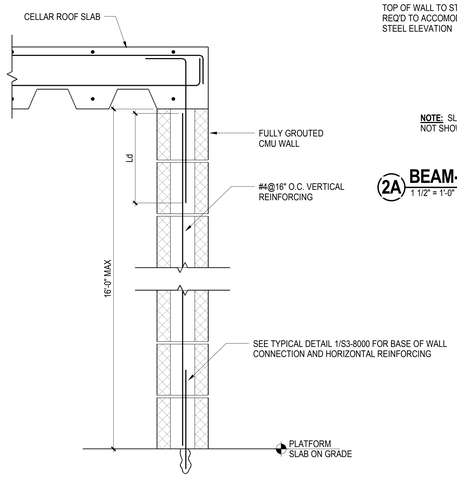

2 TYPICAL REINFORCING FOR WALLS SUPPORTING CELLAR LIDS
1 1/2" = 1'-0"

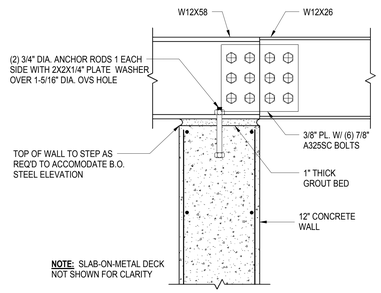

2A BEAM-TO-BEAM CONNECTION
1 1/2" = 1'-0"

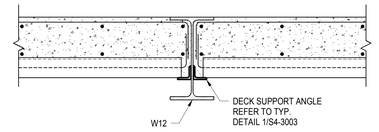

3 SECTION AT CELLAR ROOF
1 1/2" = 1'-0"

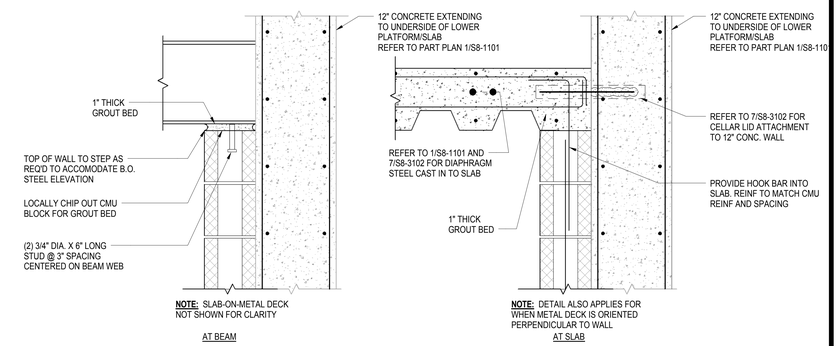

4 SECTION AT CELLAR LIDS BEARING ON CMU
1 1/2" = 1'-0"

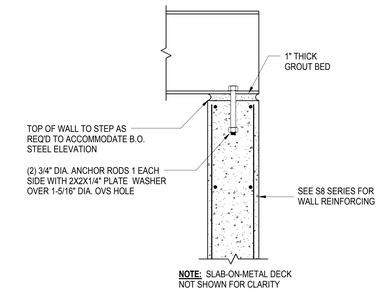

5 SECTION AT CELLAR LIDS BEARING ON CONCRETE WALL
1 1/2" = 1'-0"

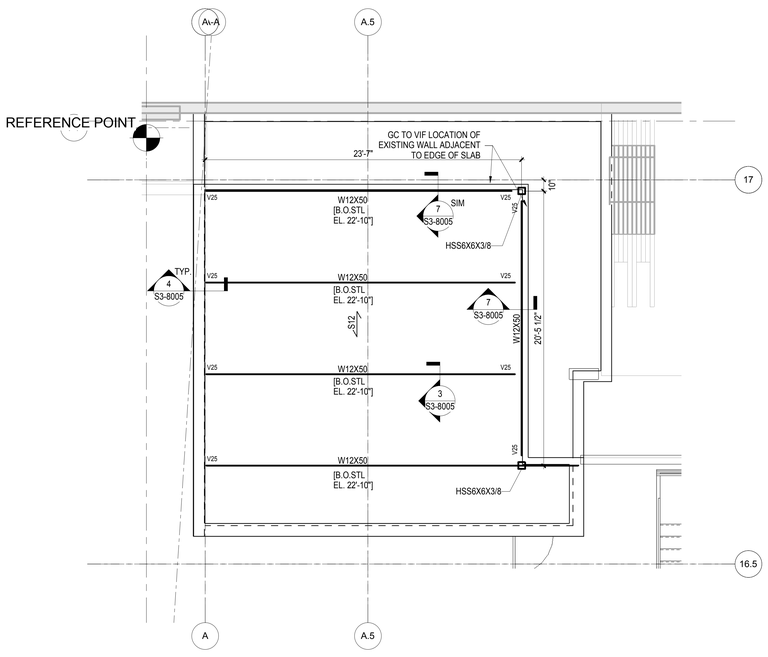

6 PART PLAN AT FUTURE TENANT FUEL OIL TANKS
1/4" = 1'-0"

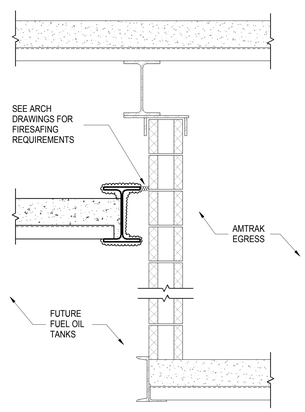

7 SECTION ADJACENT TO AMTRAK STAIR
1" = 1'-0"

HUDSON YARDS - RETAIL PODIUM AND TOWER A

500 WEST 33RD STREET
New York, NY

Client
Related Companies
60 Columbus Circle
New York, NY 10023
TEL: 212.801.1000 FAX: 212.801.1048

Oxford Properties Group
320 Park Avenue, 17th Floor
New York, NY 10022
TEL: 212.986.7514 FAX: 212.986.7510

Architect
Kohn Pedersen Fox Associates
11 West 42nd Street
New York, New York 10036
TEL: 212.977.6500 FAX: 212.956.2526

Structural Engineer
Thornton Tomasetti, Inc.
51 Madison Avenue
New York, New York 10010
TEL: 917.661.7800 FAX: 718.661.7801

Mechanical, Electrical, Plumbing, Fire Protection
Jaros Baum & Bolles Consulting Engineers
80 Pine Street
New York, NY 10013
TEL: 212.530.9300 FAX: 212.269.5894

Retail Interior Design & Planning
Elkus-Manfredi
300 A Street
Boston, MA 02210
TEL: 617.426.1300

No.	Description	Date
1	D.O.B. AMENDMENT #2	10/15/2016

Key Plan

Issue Date: 10/15/2016
Project No. N11328.00
Drawn By Author
Sheet Number

HYE-TA-S3-8005

Drawing Title

TOWER A CELLAR LEVEL DETAILS

Damian Titus
APPROVED
Under Directive 2 of 1975
AMENDED APPLICATION
Date: 05/03/2017
NYC Development Hub

0 4' 8' 16'

Drawing Number
S2-8005
E-Scan Drawing Number
S-576.00

The Architect is the author of this document and has the exclusive rights to its use and publication.

DEPT OF BLDGS STRUCTURES Job Number
ESIGN/ENGR/ES Scan Code

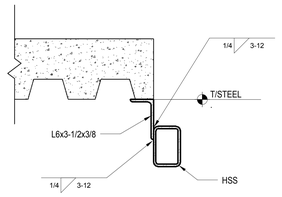

1 SECTION AT HSS WITH ANGLE
1 1/2" = 1'-0"

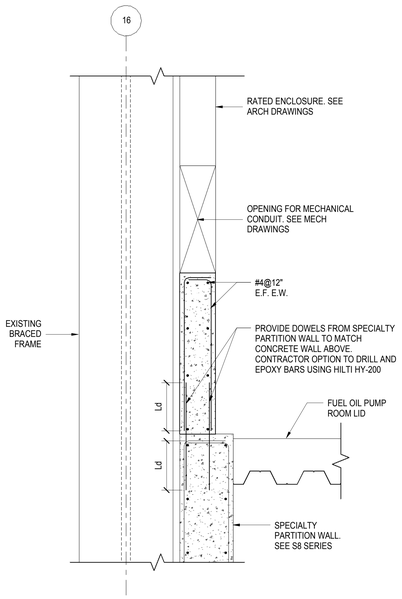

SECTION AT CANTILEVER PORTION OF LC1 WALL OVER FOAM SUPRESSION TANK ROOM
4 1" = 1'-0"

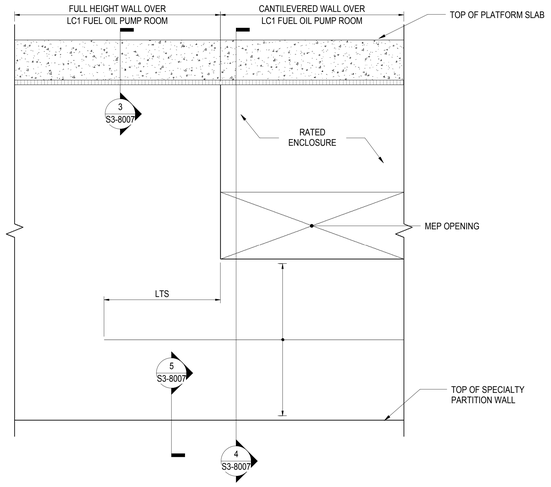

2 ELEVATION AT LC1 WALL OVER FOAM SUPRESSION TANK ROOM
1" = 1'-0"

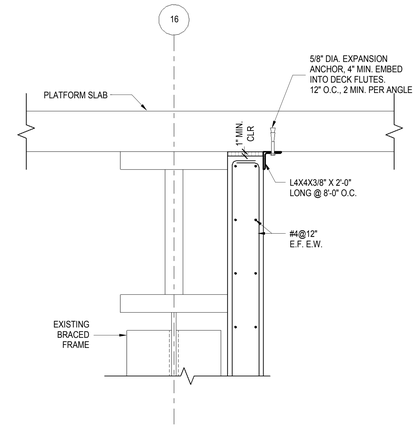

SECTION AT TOP OF FULL HEIGHT WALL

3 SECTION AT TOP OF LC1 WALL OVER FOAM SUPRESSION TANK ROOM
1" = 1'-0"

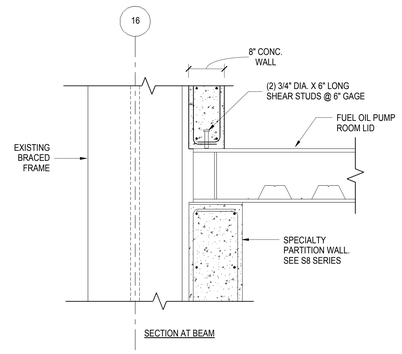

SECTION AT BEAM

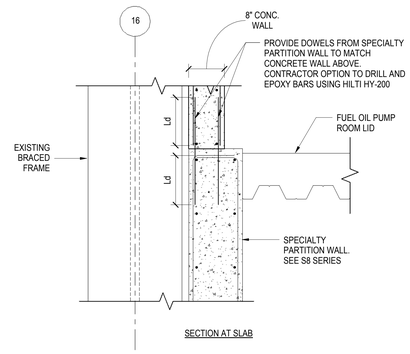

SECTION AT SLAB

5 SECTION AT BOT OF LC1 WALL OVER FOAM SUPRESSION TANK ROOM
1" = 1'-0"

HUDSON YARDS - RETAIL PODIUM AND TOWER A
500 WEST 33RD STREET
New York, NY

Client
Related Companies
60 Columbus Circle
New York, NY 10023
TEL: 212.801.1000 FAX: 212.801.1048

Oxford Properties Group
320 Park Avenue, 17th Floor
New York, NY 10022
TEL: 212.986.7514 FAX: 212.986.7510

Architect
Kohn Pedersen Fox Associates
11 West 42nd Street
New York, New York 10036
TEL: 212.977.6500 FAX: 212.956.2526

Structural Engineer
Thornton Tomasetti, Inc.
51 Madison Avenue
New York, New York 10010
TEL: 917.661.7800 FAX: 718.661.7801

Mechanical, Electrical, Plumbing, Fire Protection
Jaros Baum & Bolles Consulting Engineers
80 Pine Street
New York, NY 10013
TEL: 212.530.9300 FAX: 212.269.5894

Retail Interior Design & Planning
Elkus-Manfredi
300 A Street
Boston, MA 02210
TEL: 617.426.1300

No.	Description	Date
1	D.O.B. AMENDMENT #2	10/15/2016

Key Plan

Issue Date: 10/15/2016
Project No.: N11328.00
Drawn By: Author
Sheet Number

HYE-TA-S3-8007

Drawing Title

TOWER A LOWER PLATFORM LEVEL DETAILS

Drawing Number
S3-8007
B-Scan Drawing Number
S-577.00

Damian Titus
Buildings
APPROVED
Under Directive 2 of 1975
AMENDED APPLICATION
Date: 05/01/2017
NYC Development Hub

0 4' 8' 16'

© COPYRIGHT KOHN PEDERSEN FOX ASSOCIATES PC

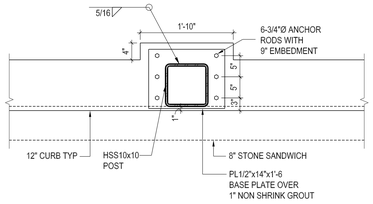

1 TYP HSS POST BASE PLATE ON CURB DETAIL

1"=1'-0"

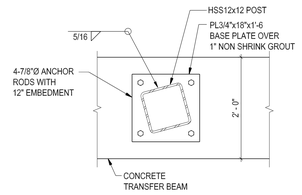

2 HSS BASE PLATE DETAIL AT CONCRETE TRANSFER GIRDER NEAR A.8/14.6

1"=1'-0"

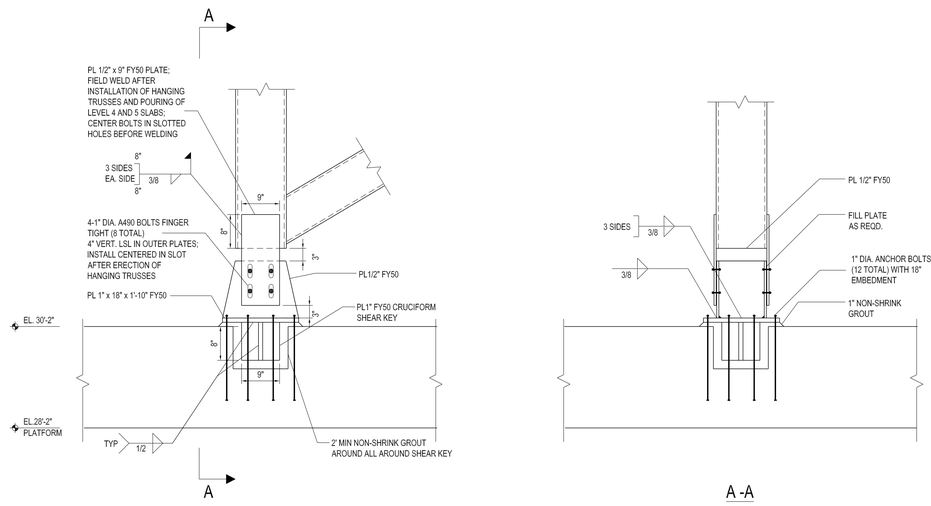

3 BASE DETAIL AT HANGING FACADE TRUSS

1"=1'-0"

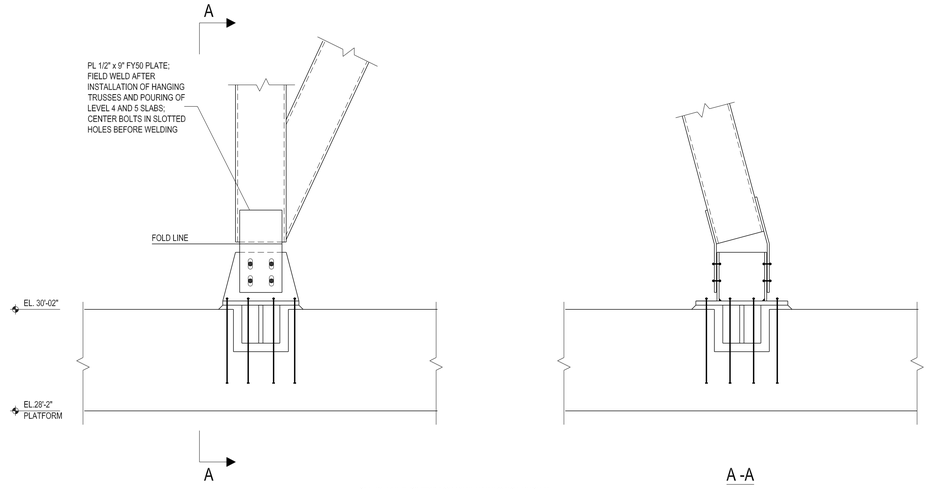

SEE DETAIL 3_S3-8010 FOR SIMILAR INFO NOT SHOWN

4 BASE DETAIL AT SLOPED HANGING FACADE TRUSS

1"=1'-0"

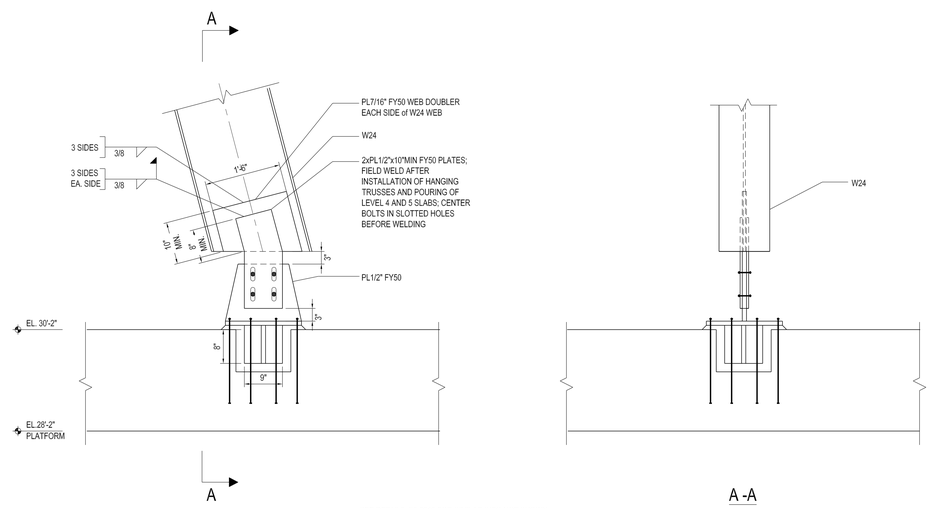

SEE DETAIL3_S3-8010 FOR SIMILAR INFO NOT SHOWN

5 BASE DETAIL AT HANGING FACADE W24

1"=1'-0"

Damian Titus
Buildings
APPROVED
Under Directive 2 of 1975
AMENDED APPLICATION
Date: 05/03/2017
NYC Development Hub

HUDSON YARDS - RETAIL PODIUM AND TOWER A

500 WEST 33RD STREET
New York, NY

Client
Related Companies
60 Columbus Circle
New York, NY 10023
TEL: 212.801.1000 FAX: 212.801.1048

Oxford Properties Group
320 Park Avenue, 17th Floor
New York, NY 10022
TEL: 212.986.7514 FAX: 212.986.7510

Architect
Kohn Pedersen Fox Associates
11 West 42nd Street
New York, New York 10036
TEL: 212.977.6500 FAX: 212.956.2526

Structural Engineer
Thornton Tomasetti, Inc.
51 Madison Avenue
New York, New York 10010
TEL: 917.661.7800 FAX: 718.661.7801

Mechanical, Electrical, Plumbing, Fire Protection
Jaros Baum & Bolles Consulting Engineers
80 Pine Street
New York, NY 10013
TEL: 212.530.9300 FAX: 212.269.5894

Retail Interior Design & Planning
Elkus-Manfredi
300 A Street
Boston, MA 02210
TEL: 617.426.1300

No.	Description	Date
1	D.O.B AMENDMENT #2	10/15/2016

Key Plan

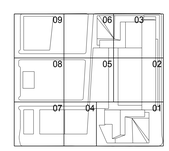

Issue Date 10/15/2016
Project No. N11328.00
Drawn By
Sheet Number

HYE-TA-S3-8010
Drawing Title

BASE PLATE DETAILS

Drawing Number
S3-8010
B-Scan Drawing Number
S-578.00

© 2013 KOHN PEDERSEN FOX ASSOCIATES PC. All rights reserved.

DEPT OF BLDGS ATTAR0025 Job Number
E5175241336 Scan Code

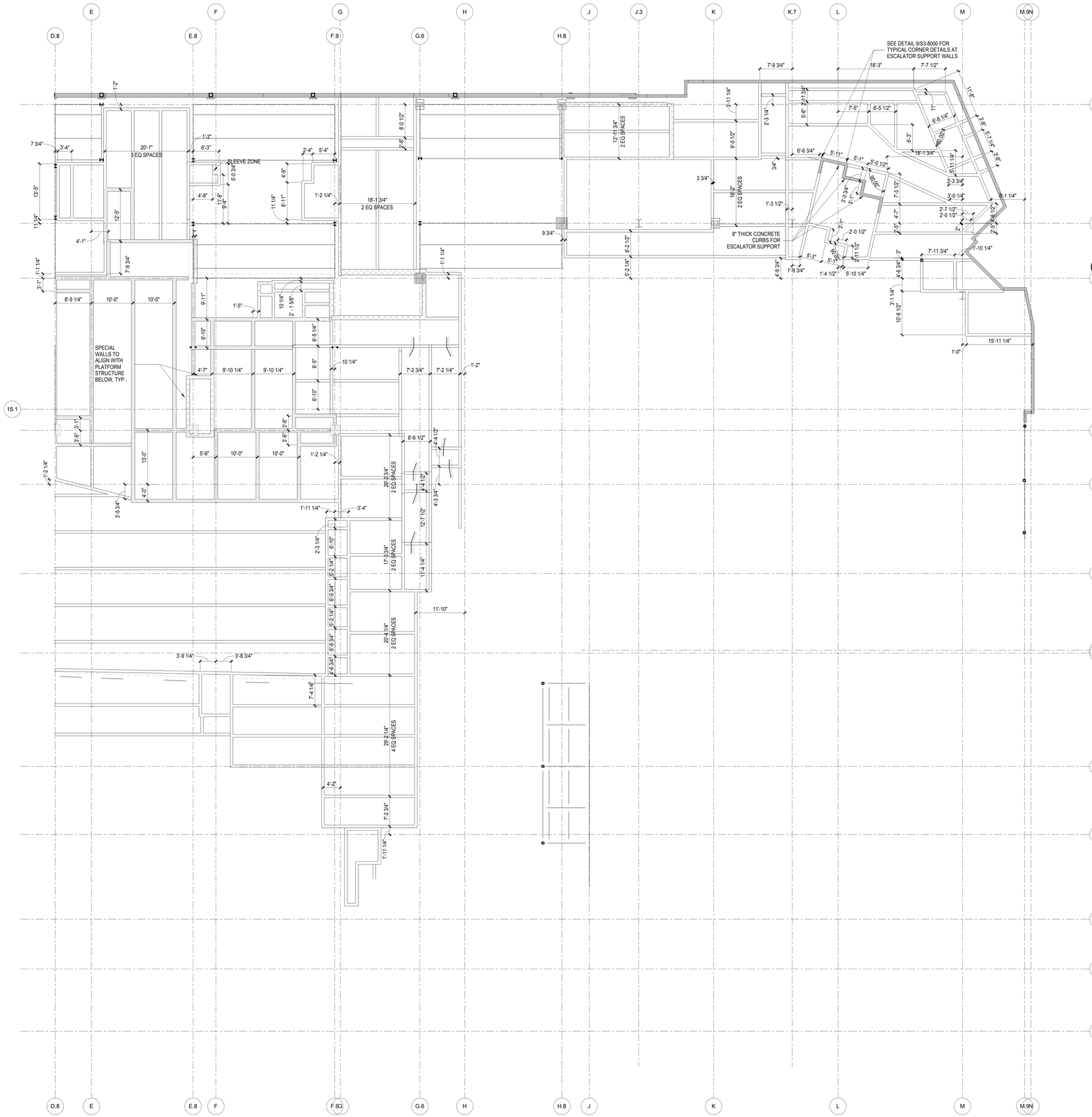

NOTES:

1. ONLY BEARING WALLS ARE SHOWN UP TO UNDERSIDE OF INTERSTITIAL LEVEL SLAB ON STRUCTURAL DRAWINGS. ASSUME WALLS ARE 8" FULLY GROUTED CMU UP TO SLAB, UNLESS OTHERWISE NOTED. SEE S3-8000 FOR TYPICAL BEARING WALL DETAILS FOR INTERSTITIAL LEVEL. SEE S4-5001 TO S4-5003 FOR TYPICAL NON-BEARING MASONRY WALL DETAILS ABOVE THE INTERSTITIAL SLABS.

2. SHOP DRAWINGS FOR ALL CMU AND CONCRETE BEARING WALLS TO BE SUBMITTED TO EOR FOR REVIEW SHOWING DIMENSIONED LAYOUTS OF ALL WALLS AND REINFORCEMENT. DIMENSIONS SHOULD TIE BACK TO THE MAIN GRID SYSTEM AND WALLS SHOULD BE COORDINATED WITH THE STEEL ERECTION DRAWINGS OF THE STRUCTURE BELOW WHERE WALLS ARE REQUIRED TO BE LOCATED DIRECTLY OVER STEEL BEAMS. FINAL LOCATIONS OF BEARING WALLS TO BE SURVEYED TO VALIDATE LOCATIONS AND CONFIRM ALIGNMENT WITH CMU WALLS ABOVE.

LEGEND:

- INDICATES SPECIAL WALLS. SEE S8 SERIES FOR DETAILS AND ARCH DRAWINGS FOR LOCATIONS
- INDICATES STEEL PLATE SANDWICH. SEE DETAILS ON S3-8000.
- INDICATES CONCRETE WALL. ASSUME 12" THICK UON ON PLANS. SEE ARCH DRAWINGS FOR LOCATIONS NOT SHOWN.
- INDICATES 8" CONCRETE WALL SUPPORTING SLAB ON STYROFOAM

WALL LEGEND & NOTES

12" = 1'-0"

0 4' 8' 16'

N

HUDSON YARDS - RETAIL PODIUM AND TOWER A

500 WEST 33RD STREET
New York, NY

Client
Related Companies
60 Columbus Circle
New York, NY 10023
TEL: 212.801.1000 FAX: 212.801.1048

Oxford Properties Group
320 Park Avenue, 17th Floor
New York, NY 10022
TEL: 212.986.7514 FAX: 212.986.7510

Architect
Kohn Pedersen Fox Associates
11 West 42nd Street
New York, New York 10036
TEL: 212.977.6500 FAX: 212.956.2526

Structural Engineer
Thornton Tomasetti, Inc.
51 Madison Avenue
New York, New York 10010
TEL: 917.661.7800 FAX: 718.661.7801

Mechanical, Electrical, Plumbing, Fire Protection
Jaros Baum & Bolles Consulting Engineers
80 Pine Street
New York, NY 10013
TEL: 212.530.9300 FAX: 212.269.5894

Retail Interior Design & Planning
Elkus-Manfredi
300 A Street
Boston, MA 02210
TEL: 617.426.1300

No.	Description	Date
1	D.O.B. AMENDMENT #2	10/15/2016

Key Plan

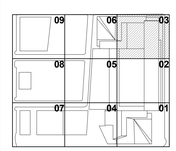

Issue Date: 10/15/2016
Project No. N11328.00
Drawn By Author
Sheet Number

HYE-TA-S3-8020

Drawing Title

TOWER A INTERSTITIAL WALL LAYOUT - SECTOR 3

Drawing Number
S3-8020
B-Scan Drawing Number
S-579.00

SHEET 332 OF 443

Damian Titus
Buildings
APPROVED
Under Directive 2 of 1975
EXTENSION OF OPERATION
Date: 03/03/2017
NYC Development Hub

DEPT OF BLDGS 421189625 Job Number
E350351/MOTR Scan Code

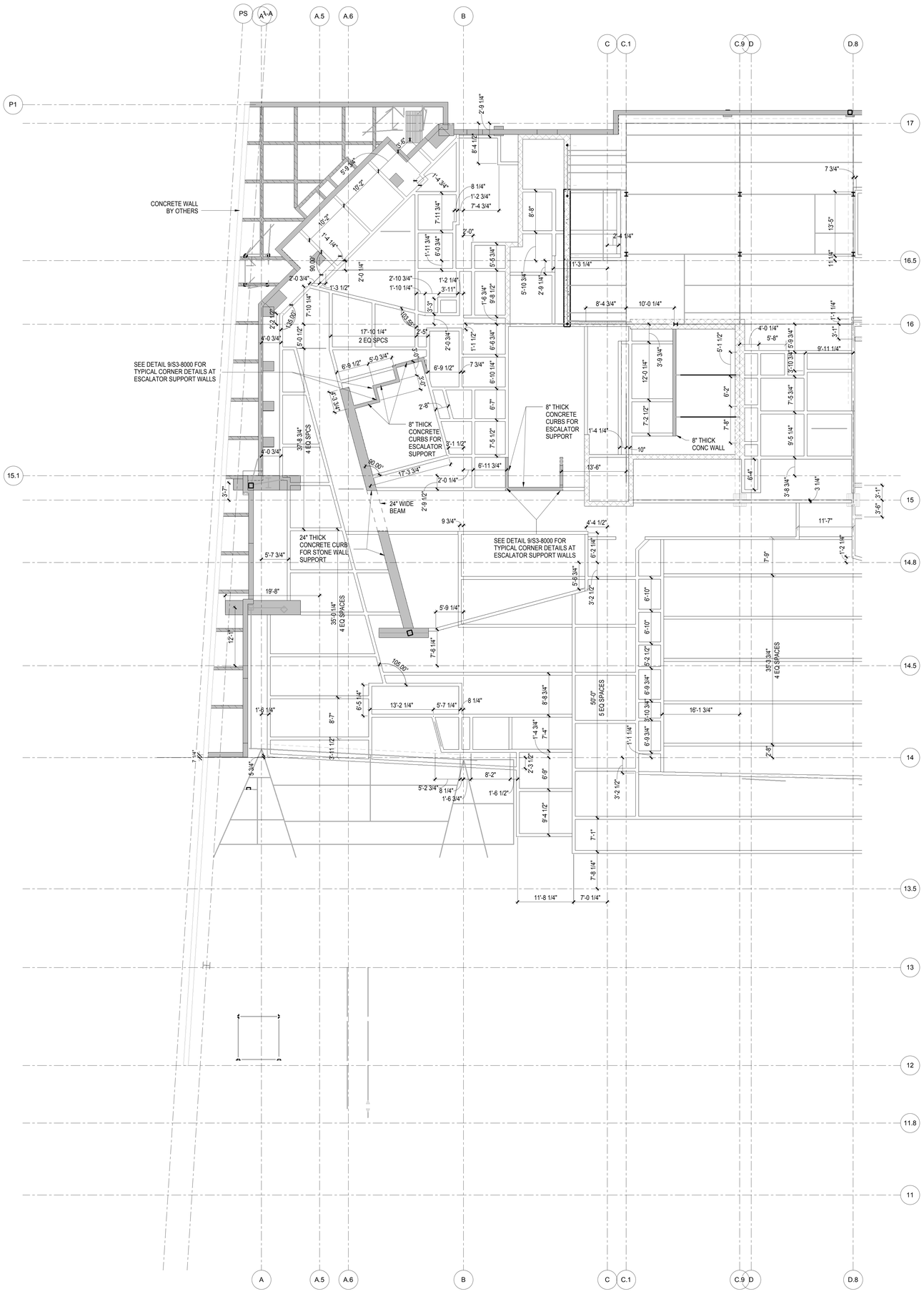

NOTES:

1. ONLY BEARING WALLS ARE SHOWN UP TO UNDERSIDE OF INTERSTITIAL LEVEL SLAB ON STRUCTURAL DRAWINGS. ASSUME WALLS ARE 8" FULLY GROUTED CMU UP TO SLAB, UNLESS OTHERWISE NOTED. SEE S3-8000 FOR TYPICAL BEARING WALL DETAILS FOR INTERSTITIAL LEVEL. SEE S4-5001 TO S4-5003 FOR TYPICAL NON-BEARING MASONRY WALL DETAILS ABOVE THE INTERSTITIAL SLABS.

2. SHOP DRAWINGS FOR ALL CMU AND CONCRETE BEARING WALLS TO BE SUBMITTED TO EOR FOR REVIEW SHOWING DIMENSIONED LAYOUTS OF ALL WALLS AND REINFORCEMENT. DIMENSIONS SHOULD TIE BACK TO THE MAIN GRID SYSTEM AND WALLS SHOULD BE COORDINATED WITH THE STEEL ERECTION DRAWINGS OF THE STRUCTURE BELOW WHERE WALLS ARE REQUIRED TO BE LOCATED DIRECTLY OVER STEEL BEAMS. FINAL LOCATIONS OF BEARING WALLS TO BE SURVEYED TO VALIDATE LOCATIONS AND CONFIRM ALIGNMENT WITH CMU WALLS ABOVE.

LEGEND:

- INDICATES SPECIAL WALLS. SEE S8 SERIES FOR DETAILS AND ARCH DRAWINGS FOR LOCATIONS
- INDICATES STEEL PLATE SANDWICH. SEE DETAILS ON S3-8000.
- INDICATES CONCRETE WALL. ASSUME 12" THICK UON ON PLANS. SEE ARCH DRAWINGS FOR LOCATIONS NOT SHOWN.
- INDICATES 8" CONCRETE WALL SUPPORTING SLAB ON STYROFOAM

WALL LEGEND & NOTES

12" = 1'-0"

HUDSON YARDS - RETAIL PODIUM AND TOWER A

500 WEST 33RD STREET
New York, NY

Client
Related Companies
60 Columbus Circle
New York, NY 10023
TEL: 212.801.1000 FAX: 212.801.1048

Oxford Properties Group
320 Park Avenue, 17th Floor
New York, NY 10022
TEL: 212.986.7514 FAX: 212.986.7510

Architect
Kohn Pedersen Fox Associates
11 West 42nd Street
New York, New York 10036
TEL: 212.977.6500 FAX: 212.956.2526

Structural Engineer
Thornton Tomasetti, Inc.
51 Madison Avenue
New York, New York 10010
TEL: 917.661.7800 FAX: 718.661.7801

Mechanical, Electrical, Plumbing, Fire Protection
Jaros Baum & Bolles Consulting Engineers
80 Pine Street
New York, NY 10013
TEL: 212.530.9300 FAX: 212.269.5894

Retail Interior Design & Planning
Elkus-Manfredi
300 A Street
Boston, MA 02210
TEL: 617.426.1300

No	Description	Date
1	D.O.B. AMENDMENT #2	10/15/2016

Key Plan

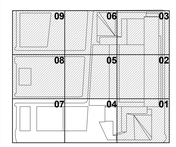

Issue Date: 10/15/2016
Project No. N11328.00
Drawn By Author
Sheet Number

HYE-TA-S3-8021

Drawing Title

TOWER A INTERSTITIAL WALL LAYOUT - SECTOR 6

Drawing Number
S3-8021
It-Scan Drawing Number
S-585.00

Damian Titus
Buildings
APPROVED
Under Directive 1 of 1975
AMENDED APPLICATION
Date: 05/03/2017
NYC Development Hub

0 4' 8' 16'

N

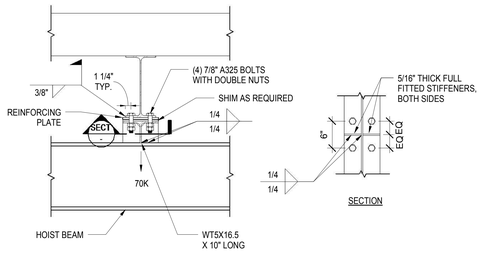

5 LIRR LOADING DOCK HOIST BEAM - SECTION
1" = 1'-0"

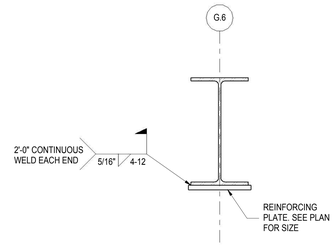

6 SECTION AT W24 REINFORCED BEAM
1" = 1'-0"

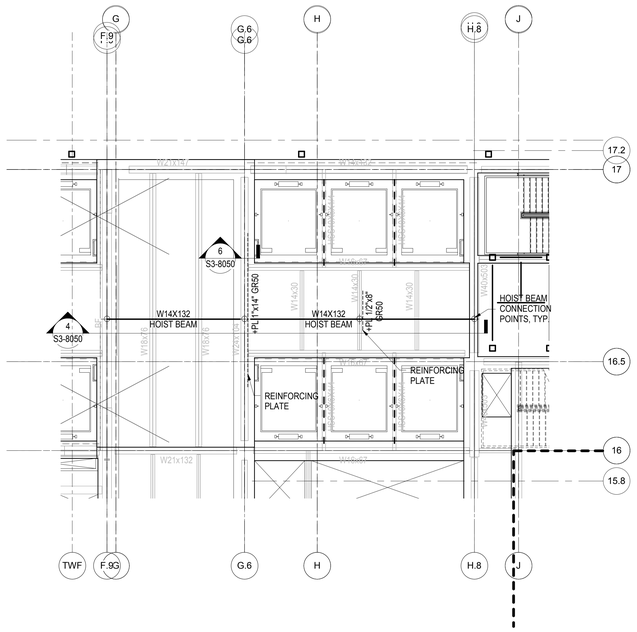

3 LIRR HOIST BEAM PART PLAN
1/8" = 1'-0"

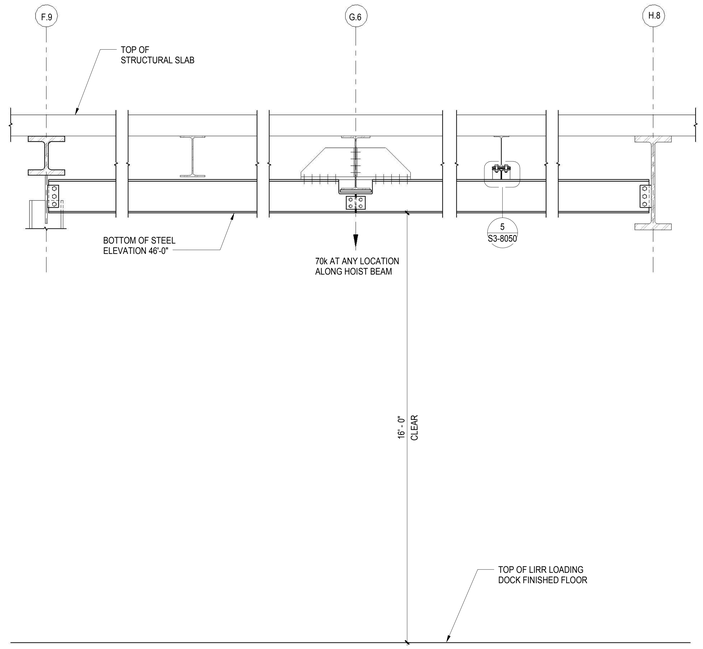

4 LIRR LOADING DOCK HOIST BEAM ELEVATION
1/2" = 1'-0"

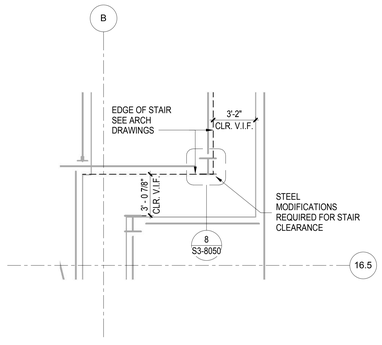

7 STAIR AA MODIFICATION AT PLATFORM EL. 28'-2"
1/4" = 1'-0"

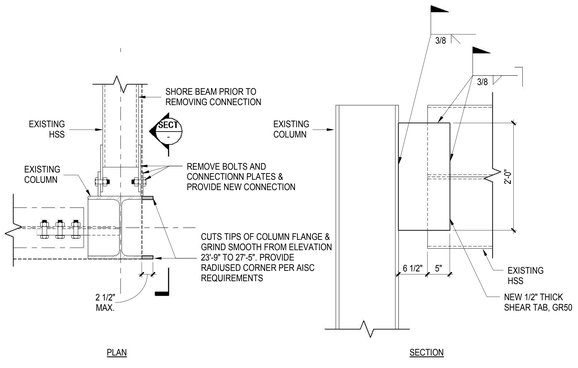

8 SECTION AT STAIR AA MODIFICATION
1" = 1'-0"

HUDSON YARDS - RETAIL PODIUM AND TOWER A

500 WEST 33RD STREET
New York, NY

Client
Related Companies
60 Columbus Circle
New York, NY 10023
TEL: 212.801.1000 FAX: 212.801.1048

Oxford Properties Group
320 Park Avenue, 17th Floor
New York, NY 10022
TEL: 212.986.7514 FAX: 212.986.7510

Architect
Kohn Pedersen Fox Associates
11 West 42nd Street
New York, New York 10036
TEL: 212.977.6500 FAX: 212.956.2526

Structural Engineer
Thornton Tomasetti, Inc.
51 Madison Avenue
New York, New York 10010
TEL: 917.661.7800 FAX: 718.661.7801

Mechanical, Electrical, Plumbing, Fire Protection
Jaros Baum & Bolles Consulting Engineers
80 Pine Street
New York, NY 10013
TEL: 212.530.9300 FAX: 212.269.5894

Retail Interior Design & Planning
Elkus-Manfredi
300 A Street
Boston, MA 02210
TEL: 617.426.1300

No.	Description	Date
1	D.O.B. AMENDMENT #2	10/15/2016

Key Plan

Issue Date: 10/15/2016
Project No. N11328.00
Drawn By Author
Sheet Number

HYE-TA-S3-8050

Drawing Title

TOWER A SECTIONS AND DETAILS

Drawing Number
S3-8050
S-Num Drawing Number
S-586.00

SHEET 334 OF 443

Damian Titus
Buildings
APPROVED
Under Directive 2 of 1975
AMENDED APPLICATION
Date: 05/01/2017
NYC Development Hub

0 4' 8' 16'

N

DEPT OF BLDGS 121186251 Job Number
ES610964053 Scan Code

GENERAL NOTES

1. ALL WORK SHALL COMPLY WITH THE REQUIREMENTS OF THE NEW YORK CITY DEPARTMENT OF BUILDINGS (NYCDOB), THE NEW YORK CITY FIRE DEPARTMENT (NYFD), THE NEW YORK CITY DEPARTMENT OF TRANSPORTATION (NYCDOT), CONSOLIDATED EDISON (CONED) AND ANY OTHER AUTHORITIES OR UTILITIES WITH JURISDICTION.
2. ANY ROADWORK SHALL BE DONE IN CONFORMANCE WITH SECTION 2-11 (F) OF DOT'S HIGHWAY RULES.
3. THE CONTRACTOR SHALL OBTAIN ALL PERMITS TO PERFORM THE WORK FROM THE NYCDOB, NYCDOT, MTA, AND ANY OTHER APPLICABLE AGENCIES PRIOR TO THE START OF WORK.
4. THE CONTRACTOR SHALL NOTIFY IN WRITING THE NYCDOB, NYCDOT, AND MTA THREE (3) DAYS PRIOR TO THE START AND FINISH OF WORK OR AS OTHERWISE REQUIRED BY THE APPROPRIATE AGENCY.
5. THE CONTRACTOR SHALL VERIFY ALL DIMENSIONS BY MEASUREMENTS AT THE JOB SITE AND INFORM THE OWNER OF ANY DISCREPANCIES. ALL PERTINENT DIMENSIONS, STRUCTURAL CONFIGURATIONS, MEANS OF ATTACHMENT, ETC. TO BE FIELD VERIFIED PRIOR TO COMMENCING ANY POTENTIALLY AFFECTED ACTIVITY.
6. THE CONTRACTOR SHALL BRING ANY FIELD CONDITION NOT ANTICIPATED BY THE CONTRACT DOCUMENTS TO THE IMMEDIATE ATTENTION OF THE OWNER AND TT.
7. NO DEVIATION SHALL BE MADE FROM THE CONTRACT DOCUMENTS WITH THE PRIOR WRITTEN APPROVAL OF THE OWNER OR ARCHITECT/ENGINEER.
8. IN ANY CASE OF CONFLICT BETWEEN THE DRAWINGS AND SPECIFICATIONS, THE MOST STRINGENT REQUIREMENT SHALL GOVERN.
9. THE CONTRACTOR ALONE SHALL BE RESPONSIBLE FOR PROTECTING THE PUBLIC AND PROPERTY FROM THE WORK, AND SHALL TAKE ALL NECESSARY MEASURES AND PRECAUTIONS TO ACHIEVE ADEQUATE SAFETY AND PROTECTION. ANY DAMAGE TO PROPERTY CAUSED BY THE WORK SHALL BE RECTIFIED TO THE SATISFACTION OF THE PROPERTY OWNER OR RELEVANT AUTHORITY.
10. PROVIDE TEMPORARY BARRICADES AROUND THE OPEN EXCAVATION AS REQUIRED BY OSHA, NYCDOB, AND NYCDOT. EXCAVATIONS SHALL BE COMPLETELY ENCLOSED BY TIMBER CURBS, LIGHTED BARRICADES, AND TEMPORARY FENCES.
11. WORK AREAS SHALL BE KEPT CLEAN, AND ALL DEBRIS SHALL BE REMOVED FROM THE SITE DAILY OR AS DIRECTED BY THE OWNER.
12. THE WORK SHALL BE PROPERLY PROTECTED FROM ADVERSE WEATHER AND TEMPERATURES.
13. ALL MANHOLES, VAULT ACCESS DOORS, VALVE BOXES, GRATINGS, RAILS, LAMPPOSTS, SIGNS, STANDPIPES, PHONE BOOTHS, FUEL OIL DEVICES, ETC. LOCATED IN AREAS AFFECTED BY THIS WORK, WHETHER OR NOT THEY ARE INDICATED ON THE DRAWINGS, SHALL BE EITHER RETAINED, OR REMOVED AND REPLACED IN THEIR EXISTING POSITIONS, EXCEPT AS NOTED ON THE DRAWINGS. THEY ARE TO BE PROTECTED, CLEANED, AND PAINTED AS NECESSARY. REFER TO CIVIL DRAWINGS FOR DETAILS.
14. ANY DAMAGE TO CATCH BASINS, SEWERS, OR UTILITIES, CAUSED BY THE CONTRACTOR'S WORK, SHALL BE REPAIRED OR REPLACED BY THE CONTRACTOR AT NO COST TO THE OWNER OR THE CITY OF NEW YORK. CATCH BASINS IN THE PROJECT AREA TO REMAIN OPERABLE AT ALL TIMES, AND THE CONTRACTOR SHALL RECTIFY ANY FLOOD CONDITIONS RESULTING WITHIN THE WORK AREA AS A RESULT OF THE WORK IN A MANNER APPROVED BY TT.
15. ALL EXISTING TRAFFIC SIGNAL SYSTEMS TO BE PROTECTED AND MAINTAINED BY THE CONTRACTOR FOR THE DURATION OF THE WORK.
16. AT LEAST TEN (10) DAYS PRIOR TO STARTING WORK, THE CONTRACTOR SHALL SUBMIT A LIST OF ALL PRODUCTS ALONG WITH PRODUCT INFORMATION AND INSTRUCTIONS TO TT FOR REVIEW AND APPROVAL. ALTERNATIVES SUBMITTED MUST MEET OR EXCEED REQUIREMENTS OF THE CONTRACT DOCUMENTS AND MUST BE FULLY COMPATIBLE WITH THE PROPOSED APPLICATION.
17. WHERE APPLICABLE, PERFORM THE WORK IN ACCORDANCE WITH THE REQUIREMENTS OF PRODUCT MANUFACTURER'S INSTRUCTIONS AND RECOMMENDATIONS.
18. THE CONTRACTOR SHALL NOTIFY THE MAYOR'S TRAFFIC AND CONSTRUCTION COORDINATION COUNCIL AND THE BUREAU OF TRAFFIC OPERATIONS AT LEAST 20 DAYS BEFORE THE START OF CONSTRUCTION, OR AS OTHERWISE REQUIRED BY THE MOST RECENT NYC REQUIREMENTS.
19. SPECIAL INSPECTIONS
    A. SPECIAL INSPECTIONS REQUIRED BY THE NEW YORK CITY BUILDING CODE SHALL BE PERFORMED BY AN INDEPENDENT TESTING AGENCY PROVIDED BY THE OWNER FOR THE FOLLOWING ITEMS:
        1. CAST-IN-PLACE CONCRETE (NYCBC 1704.4)
        2. STRUCTURAL STEEL (NYCBC 1704.3)
        3. CONCRETE DESIGN MIX: TR2 (NYCBC 1905.3)
        4. CONCRETE TEST CYLINDER: TR3 (NYCBC 1905.6)
        5. STRUCTURAL STABILITY (NYCBC 1704.19)
    B. THE TESTING AGENCY FOR THE SPECIAL INSPECTIONS SHALL FILE ALL APPROPRIATE FORMS WITH THE BUILDING DEPARTMENT.
    C. THE CONTRACTOR SHALL COORDINATE WITH THE TESTING AGENCY FOR WHEN SITE VISITS ARE REQUIRED FOR INSPECTING WORK.
23. THE CONTRACTOR SHALL NOT BE PERMITTED TO STORE CONSTRUCTION MATERIALS, FORMS, REINFORCEMENT, EQUIPMENT, EXCAVATED MATERIAL AND ANY OTHER CONSTRUCTION OR DEMOLITION RELATED MATERIALS ON ANY ACTIVE SIDEWALK OR ROADWAY.
24. STORED MATERIAL SHALL BE NEATLY STACKED AT LOCATIONS APPROVED BY THE OWNER.
25. ALL SIGNS AND BARRICADES TO CONFORM TO STANDARDS SPECIFIED IN THE BUREAU OF TRAFFIC CONDITIONS "REGULATION MANUAL ON TEMPORARY TRAFFIC AND PEDESTRIAN CONTROL BY STREET BARRICADES AND CHANNELIZATION" OR TO THE "MANUAL OF UNIFORM TRAFFIC CONTROL DEVICES" WHERE APPLICABLE.
26. IT IS THE CONTRACTOR'S RESPONSIBILITY TO EMPLOY ADDITIONAL SIGNAGE AND MEASURES SUCH AS TRAFFIC CONES, HIGH VISIBILITY TAPE, AND FLAGS TO MAINTAIN THE SAFETY OF VEHICULAR AND PEDESTRIAN TRAFFIC DURING CONSTRUCTION.

DEMOLITION NOTES

1. REMOVED MATERIALS, UNLESS OTHERWISE NOTED, BECOME THE PROPERTY OF THE CONTRACTOR AND SHALL BE REMOVED FROM THE SITE IN ACCORDANCE WITH ALL APPLICABLE LAWS, CODES, AND REGULATIONS.
2. REMOVE AND LEGALLY DISPOSE OF ALL EXISTING SIDEWALKS, WATERPROOFING MATERIALS, STRUCTURAL CONCRETE, CURBS, DEMOLITION MATERIALS, AND ALL OTHER ELEMENTS, WHETHER SPECIFICALLY INDICATED OR NOT, WHICH CAN BE REASONABLY INFERRED FROM DRAWINGS OR OBSERVATION OF THE SITE, AND AS REQUIRED TO COMPLETE THE WORK.
3. THE CONTRACTOR SHALL USE QUALIFIED, EXPERIENCED PERSONNEL FOR SELECTIVE REMOVAL OPERATIONS. SELECTIVE REMOVAL AND DEMOLITION OPERATIONS SHALL BE PERFORMED IN A CAREFUL, ORDERLY AND CONTROLLED MANNER TO AVOID HAZARDS TO PERSONS, DAMAGE TO PROPERTY, AND THE SPREADING OF DUST.
4. THE CONTRACTOR IS FULLY RESPONSIBLE FOR THE MEANS AND METHODS OF DEMOLITION AND THE SAFETY OF THE EXISTING STRUCTURE.
5. NO PORTION OF THE EXISTING STRUCTURE SHALL BE PERMITTED TO FALL NOR SHALL ANY DEBRIS BE DROPPED EXCEPT AS BY METHODS THAT WILL PRECLUDE INJURY TO PERSON AND PROPERTY.
6. THE CONTRACTOR SHALL NOT REMOVE MORE OF THE EXISTING STRUCTURE THAN NECESSARY TO PROPERLY EXECUTE THE DETAILS SHOWN IN THE DRAWINGS. DEMOLITION MUST BE PERFORMED IN SUCH A MANNER AS TO ENSURE THAT THE REMAINING STRUCTURE AND MATERIALS TO BE REUSED ARE NOT DAMAGED.
7. THE CONTRACTOR SHALL PROVIDE SHORING AND BRACING AS REQUIRED DURING DEMOLITION AND SUBSEQUENT CONSTRUCTION. THE CONTRACTOR IS SOLELY RESPONSIBLE FOR THE DESIGN OF SUCH TEMPORARY SHORING AND BRACING.
8. THE CONTRACTOR IS RESPONSIBLE FOR REPAIRING ANY DAMAGE TO EXISTING STRUCTURES, UTILITIES, EQUIPMENT, ETC. WHICH IS TO REMAIN, TO THE COMPLETE SATISFACTION OF THE OWNER AND AT NO EXPENSE TO THE OWNER.
9. THE CONTRACTOR SHALL PRESERVE AND PROTECT ALL EXISTING UTILITIES, DUCTS, AND EQUIPMENT, AND ANY MATERIALS WHICH ARE TO BE REUSED.
10. ALL EXISTING STRUCTURES ARE INDICATED FOR REFERENCE ONLY AND ARE TO BE FILED VERIFIED BY THE CONTRACTOR. VERIFY THE EXACT EXTENT OF DEMOLITION AT THE SITE. DETERMINE THE NATURE AND EXTENT OF DEMOLITION THAT WILL BE NECESSARY BY COMPARING THE CONTRACT DOCUMENTS WITH THE EXISTING STRUCTURE.
11. THE CONTRACTOR SHALL USE THE STRUCTURAL CONTRACT DOCUMENTS IN CONJUNCTION WITH THE CIVIL CONTRACT DOCUMENTS. IN THE EVENT OF CONFLICTS, THE CONTRACTOR SHALL IMMEDIATELY NOTIFY THE ARCHITECT AND ENGINEER.

BOLLARD CONSTRUCTION NOTES

1. CONCRETE SHALL BE AIR ENTRAINED NORMAL WEIGHT CONCRETE WITH A MINIMUM COMPRESSIVE STRENGTH OF 4000 PSI AT 28 DAYS UON.
2. ALL REINFORCING BARS SHALL CONFORM TO ASTM A615 GRADE 60.
3. STAGGERED, CLASS A TENSION SPLICES SHALL BE ALLOWED FOR SPLICING OF HORIZONTAL BARS, UNLESS OTHERWISE NOTED, TERMINATE BARS AT DISCONTINUOUS ENDS WITH STANDARD HOOKS.
4. STEEL MATERIALS SHALL CONFORM TO THE FOLLOWING UNLESS OTHERWISE NOTED ON THE DRAWINGS:
    A. PIPE: ASTM A53 GRADE B (35 KSI) HOT DIPPED GALVANIZED.
    B. PLATE: ASTM A36 (36 KSI)
5. ALL BACKFILL SHALL BE LOW COHESIVE, WELL-GRADED CRUSHED OR BROKEN GRAVEL OF A PARTICLE SIZE DISTRIBUTION AS DESCRIBED HEREIN. THE BACKFILL SHALL BE COMPACTED TO A DENSITY NOT LESS THAN 90% MAXIMUM DRY DENSITY.

SIEVE SIZE	MASS PERCENT PASSING
a. 2 IN	100%
b. 1 IN	75% - 95%
c. ¾ IN	40% - 75%
d. NO. 4	30% - 60%
e. NO. 10	20% - 45%
f. NO. 40	15% - 30%
g. NO. 200	5% - 20%

6. BOLLARDS ARE TO BE INSTALLED PLUMB WITHIN THE TOLERANCES PROVIDED IN THE AISC "CODE OF STANDARD PRACTICE FOR BUILDINGS AND BRIDGES" FOR COLUMNS.
7. BOLLARD FOUNDATION CONSTRUCTION JOINTS SHALL BE LOCATED TO PROVIDE A 60 FOOT MAXIMUM LENGTH OF CONCRETE PLACEMENT.
8. CONTRACTOR TO PROVIDE SHOP DRAWINGS OF INTENDED CONSTRUCTION JOINTS, PENETRATIONS, ANCHOR BELT LAYOUTS, CONCRETE MIX DESIGNS, FORMWORK, REINFORCING, AND OTHER ITEMS AFFECTING THE BOLLARD FOUNDATION.
9. ALL CONSTRUCTION TO BE PERFORMED IN ACCORDANCE WITH 2008 NEW YORK CITY BUILDING CODE AND THE AMERICAN CONCRETE INSTITUTE "BUILDING CODE REQUIREMENTS FOR STRUCTURAL CONCRETE" (ACI 318-2008).

FIXED BOLLARD DEEP FOUNDATION NOTES:

1. BOLLARD FOUNDATION CONSTRUCTION JOINTS SHALL BE LOCATED TO PROVIDE A 60 FOOT MAXIMUM LENGTH OF CONCRETE PLACEMENT.
2. BOLLARD FOUNDATION TO CONTAIN A MINIMUM OF THREE (3) BOLLARDS.
3. BOLLARD FOUNDATION MAY TERMINATE NOT LESS THAN 1'-6" BEYOND THE CENTERLINE OF A BOLLARD.
4. UTILITY SLEEVES ARE NEEDED AT ALL POINTS WHERE UTILITIES ARE CROSSING THE BOLLARD FOUNDATION BEAM.
5. SLEEVES CUTTING THROUGH 2'-6" WIDTH OF THE BOLLARD FOUNDATION ARE PERMISSIBLE SUBJECT TO THE FOLLOWING LIMITATIONS:
    A. A MAXIMUM OF ONE SLEEVE IS PERMITTED EVERY THREE BOLLARDS.
    B. SLEEVES MUST BE A MAXIMUM OF 6" IN DIAMETER.
    C. SLEEVES MUST PASS THROUGH GAPS IN THE REINFORCEMENT.
6. SLEEVES CUTTING THROUGH 4'-0" HEIGHT OF BOLLARD FOUNDATION ARE PERMISSIBLE SUBJECT TO THE FOLLOWING LIMITATIONS:
    A. SLEEVES PERMITTED ONLY WHERE INDICATED ON (PLAN SHEET)
    B. MAX 10" DIAMETER SLEEVE PERMITTED
    C. SLEEVES MUST PASS THROUGH GAPS IN REINF
    D. SLEEVE MUST BE CENTERED ON BOLLARD LINE
7. TERMINATE ALL HORIZONTAL BARS W/ STANDARD 90 DEG HOOKS AT FOUNDATION TERMINATIONS.
8. PROVIDE MIN 6" GAP BETWEEN FOUNDATION AND ANY ADJACENT MANHOLES/BASINS/UTILITIES, ETC. FILL GAP W/ BACKFILL OR FOAM.

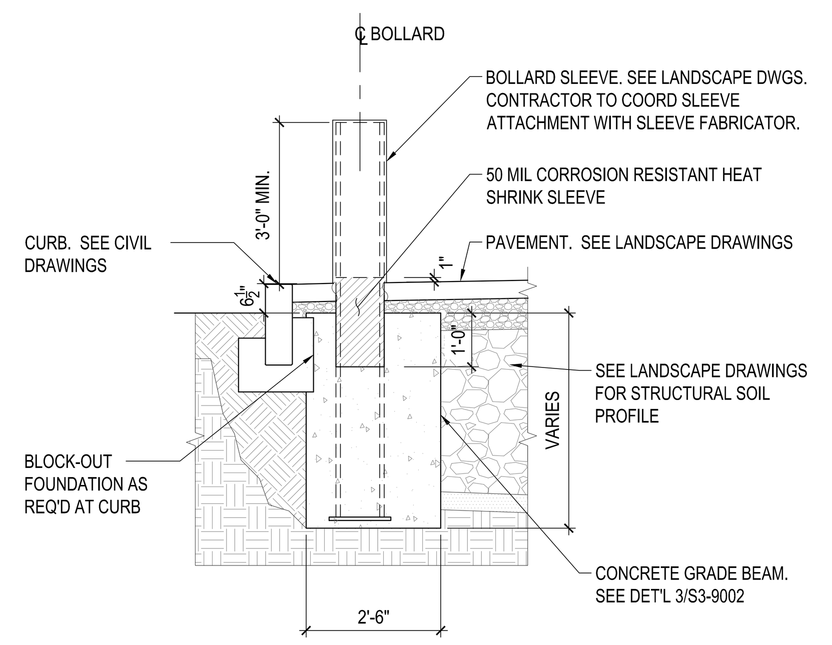

1 **10TH AVE BOLLARD AT STRUCTURAL SOIL**
SCALE: 1/2" = 1'-0"

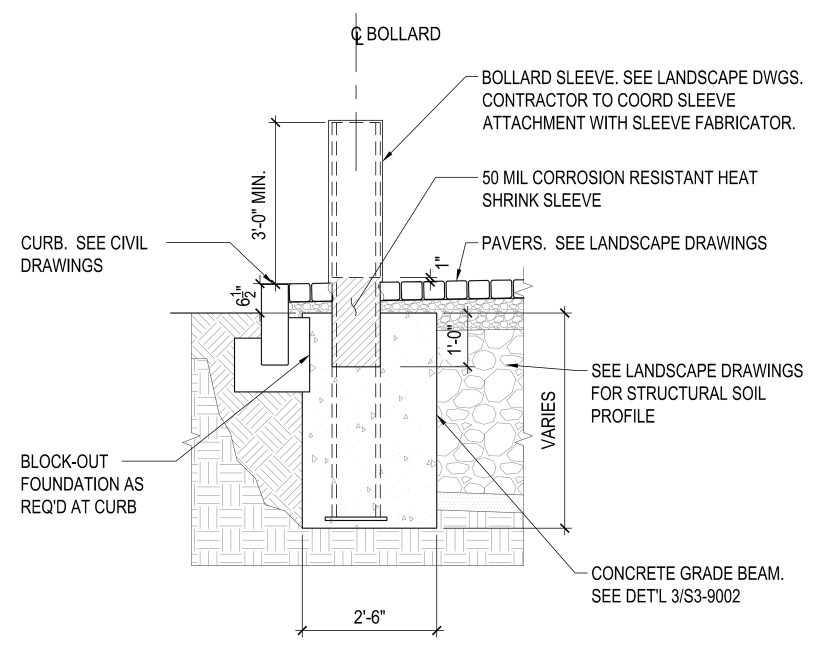

2 **10TH AVE BOLLARD AT PAVERS**
SCALE: 1/2" = 1'-0"

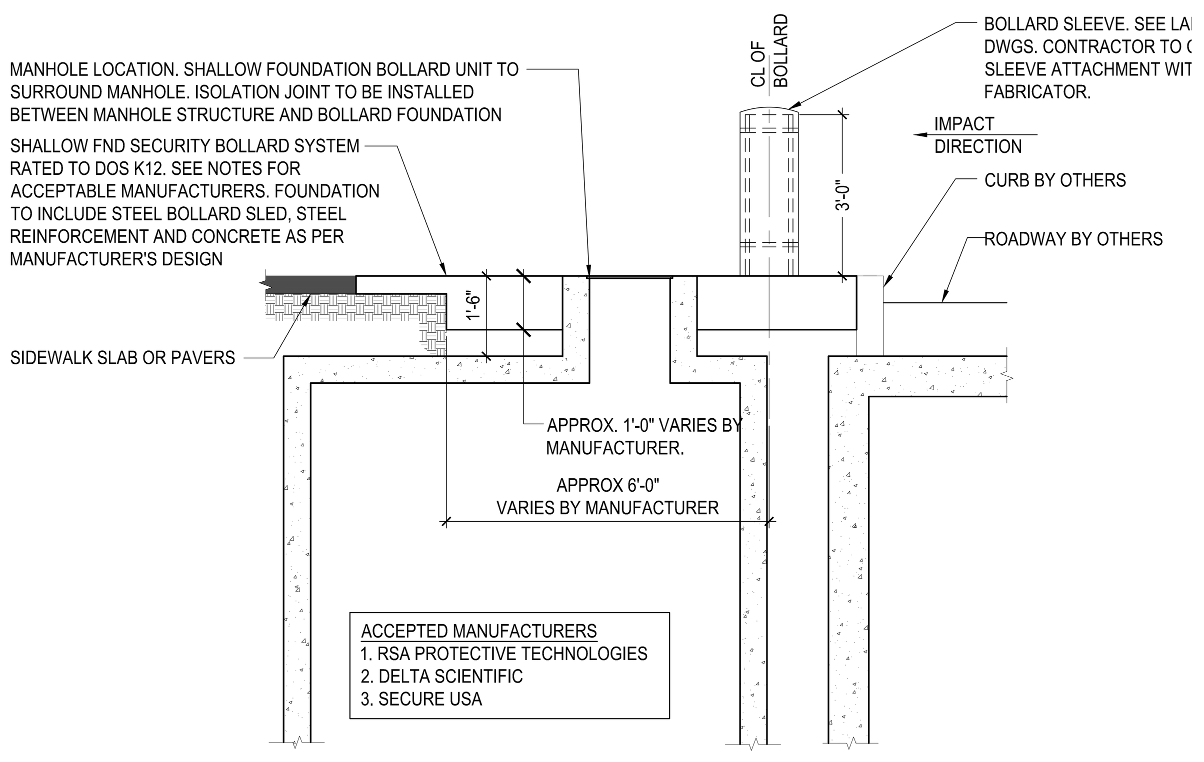

3 **SECTION**
SCALE: 1/2" = 1'-0"

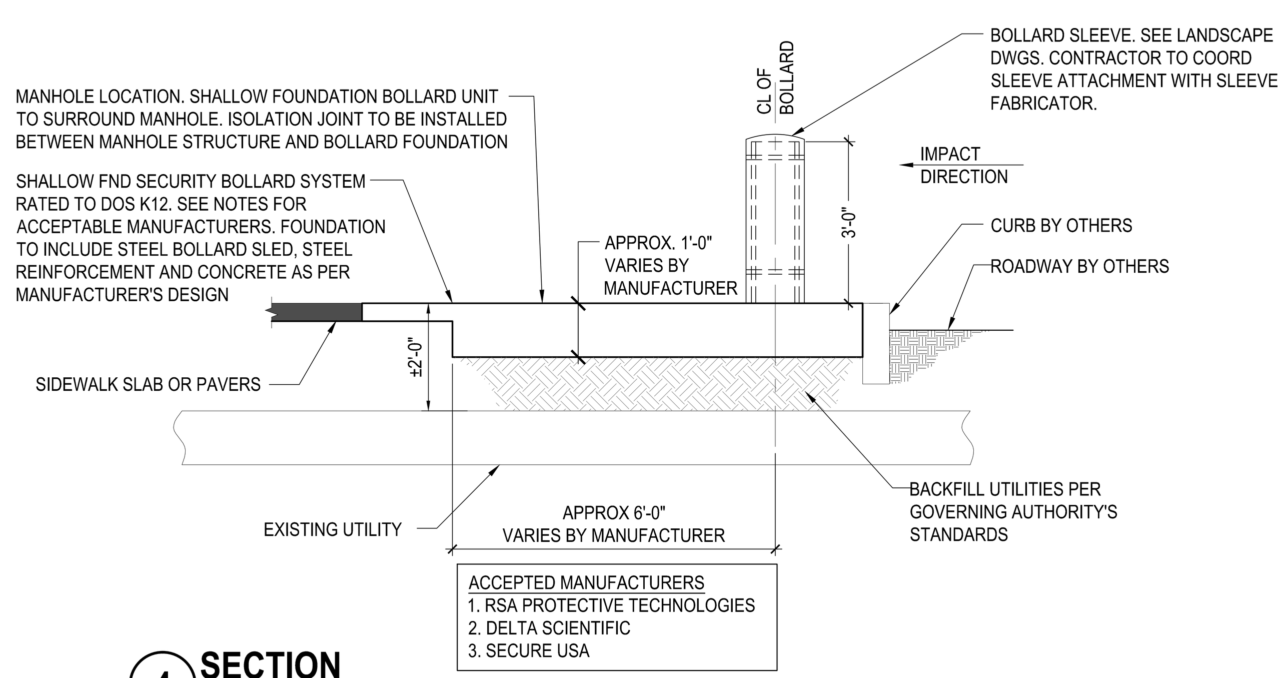

4 **SECTION**
SCALE: 1/2" = 1'-0"

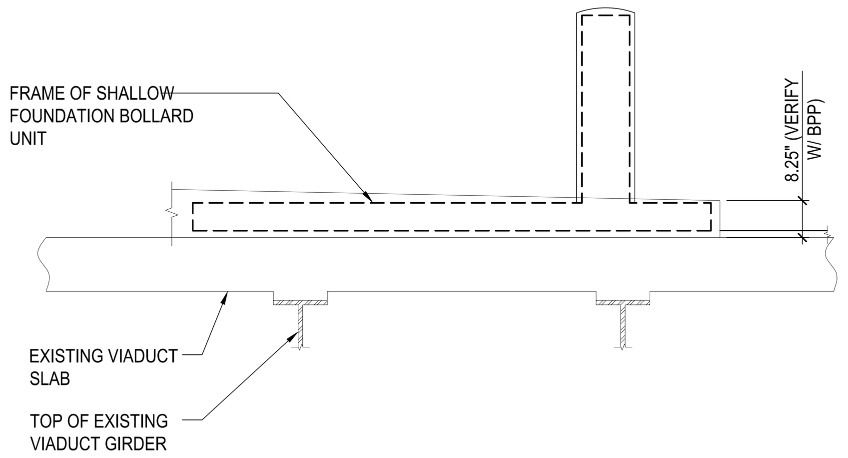

5 **5 SHALLOW FOUNDATION BOLLARDS ON 10TH AVE. VIADUCT**
SCALE: 1/2" = 1'-0"

Filename: P:\PA1\Projects\L16030.00\Drawings\Struct\Current\HYE-TA & TP_rev1.dwg Plotted by: Wells, Courtney Plot Time: 10/24/2016 1:00 PM

HUDSON YARDS - RETAIL PODIUM AND TOWER A
500 WEST 33RD STREET
New York, NY

Client
Related Companies
60 Columbus Circle
New York, NY 10023
TEL: 212.801.1000 FAX: 212.801.1048

Oxford Properties Group
320 Park Avenue, 17th Floor
New York, NY 10022
TEL: 212.986.7514 FAX: 212.986.7510

Architect
Kohn Pedersen Fox Associates
11 West 42nd Street
New York, New York 10036
TEL: 212.977.6500 FAX: 212.956.2526

Structural Engineer
Thornton Tomasetti, Inc.
51 Madison Avenue
New York, New York 10010
TEL: 917.661.7800 FAX: 718.661.7801

Mechanical, Electrical, Plumbing, Fire Protection
Jaros Baum & Bolles Consulting Engineers
80 Pine Street
New York, NY 10013
TEL: 212.530.9300 FAX: 212.269.5894

Retail Interior Design & Planning
Elkus-Manfredi
300 A Street
Boston, MA 02210
TEL: 617.426.1300

No.	Description	Date
1	D.O.B. AMENDMENT #2	10/15/2016

Key Plan

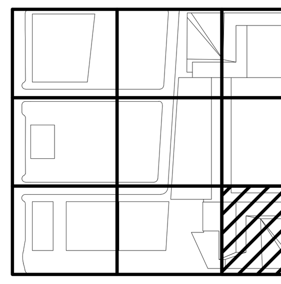

Damian Titus
NYC Buildings
APPROVED
Under Directive 2 of 1975
AMENDED APPLICATION
Date: 05/03/2017
NYC Development Hub

Issue Date: 10/15/2016
Project No. N11328.00
Drawn By Author
Sheet Number
HYE -TA -S3-9001
Drawing Title
BOLLARD FOUNDATION PLAN
Drawing Number
S3-9001
B-Scan Drawing Number
S-587.00
SHEET 335 OF 443

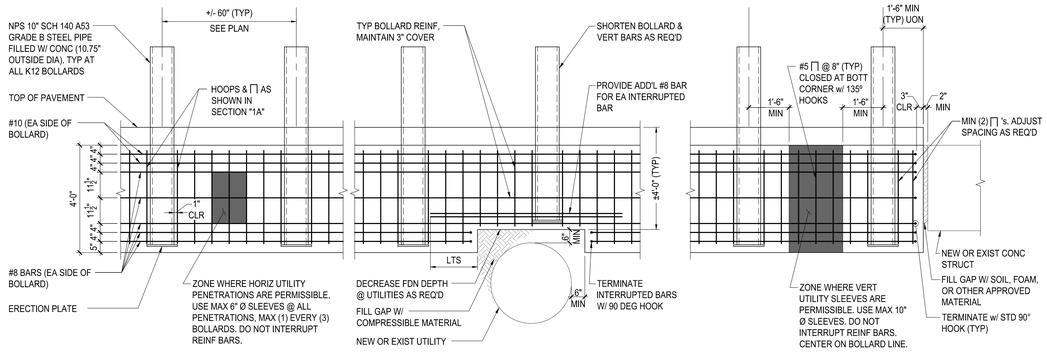

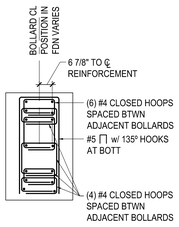

SECTION "1A"

1 K12 FIXED BOLLARD DEEP FOUNDATION
SCALE: 1/2" = 1'-0"

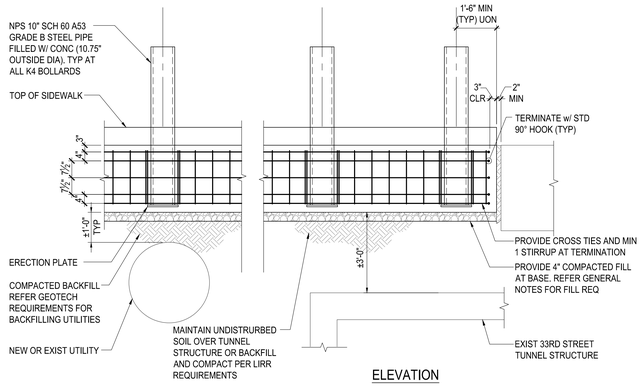

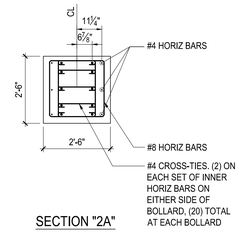

SECTION "2A"

2 K4 FIXED BOLLARD FOUNDATION
SCALE: 1/2" = 1'-0"

3 K4 FIXED BOLLARD REINFORCED FOUNDATION
SCALE: 1/2" = 1'-0"

4 SECTION
SCALE: 1/2" = 1'-0"

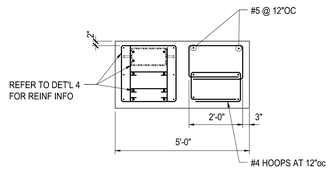

5 SECTION
SCALE: 1/2" = 1'-0"

6 K12 FIXED BOLLARD REINFORCED FOUNDATION
SCALE: 1/2" = 1'-0"

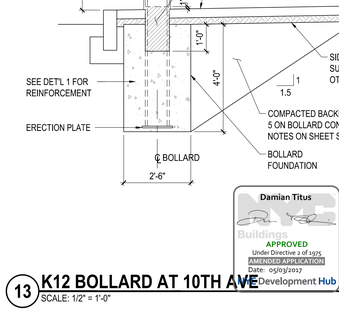

7 SECTION
SCALE: 1/2" = 1'-0"

8 SECTION
SCALE: 1/2" = 1'-0"

9 RETRACTABLE BOLLARD FOUNDATION DETAIL
SCALE: 3/4" = 1'-0"

10 K12 OR K4 BOLLARD AT STRUCTURAL SOIL
SCALE: 1/2" = 1'-0"

11 K12 OR K4 BOLLARD AT PAVERS
SCALE: 1/2" = 1'-0"

12 RETRACTABLE BOLLARD DETAIL
SCALE: 3/4" = 1'-0"

13 K12 BOLLARD AT 10TH AVE
SCALE: 1/2" = 1'-0"

Damian Titus
Buildings
APPROVED
Under Directive 2 of 1975
AMENDED APPLICATION
Date: 05/03/2017
Development Hub

HUDSON YARDS - RETAIL PODIUM AND TOWER A

500 WEST 33RD STREET
New York, NY

Client
Related Companies
60 Columbus Circle
New York, NY 10023
TEL: 212.801.1000 FAX: 212.801.1048

Oxford Properties Group
320 Park Avenue, 17th Floor
New York, NY 10022
TEL: 212.986.7514 FAX: 212.986.7510

Architect
Kohn Pedersen Fox Associates
11 West 42nd Street
New York, New York 10036
TEL: 212.977.6500 FAX: 212.956.2526

Structural Engineer
Thornton Tomasetti, Inc.
51 Madison Avenue
New York, New York 10010
TEL: 917.661.7800 FAX: 718.661.7801

Mechanical, Electrical, Plumbing, Fire Protection
Jaros Baum & Bolles Consulting Engineers
80 Pine Street
New York, NY 10013
TEL: 212.530.9300 FAX: 212.269.5894

Retail Interior Design & Planning
Elkus-Manfredi
300 A Street
Boston, MA 02210
TEL: 617.426.1300

No.	Description	Date
1	D.O.B. AMENDMENT #2	10/15/2016

Key Plan

Issue Date: 10/15/2016
Project No. N11328.00
Drawn By: Author
Sheet Number

HYE -TA - S3-9002

Drawing Title

SECTIONS AND DETAILS

Drawing Number
S3-9002
B-Size Drawing Number
S-588.00

© 2016 Related Companies, Oxford Properties Group, Kohn Pedersen Fox Associates, Thornton Tomasetti, Inc., Jaros Baum & Bolles Consulting Engineers, Elkus-Manfredi. All rights reserved.

Filename: P:\PA3\Projects\L18030.00\Drawings\Struct\Current\HYE-TA & TP_rev1.dwg Plotted by: Wells, Courtney Plot Time: 10/24/2016 1:03 PM

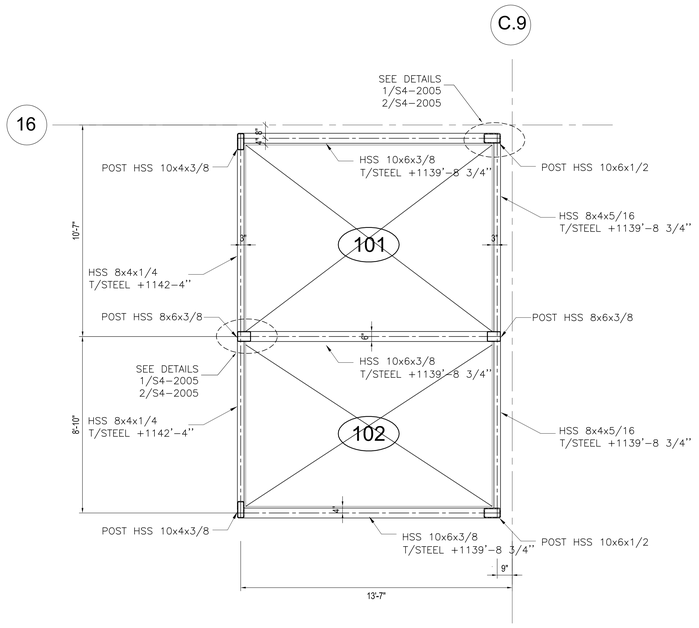

1 **ELEVATOR INTERMEDIATE RAIL SUPPORT PLAN - LEVEL 67 TO LEVEL 68**

SCALE: 3/8" = 1'-0"

NOTE:
ALL BEAMS ARE LSV UNLESS OTHERWISE NOTED

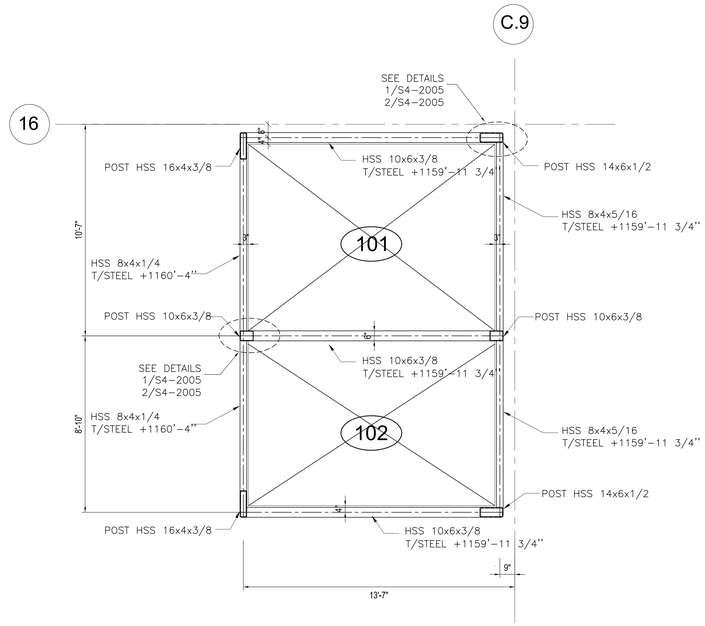

2 **ELEVATOR INTERMEDIATE RAIL SUPPORT PLAN - LEVEL 68 TO LEVEL 69**

SCALE: 3/8" = 1'-0"

NOTE:
ALL BEAMS ARE LSV UNLESS OTHERWISE NOTED

ALTERNATE ELEVATOR NUMBERING	
101	SA1
102	SA2
103	SA3
104	SA4

OTHER ELEVATORS HAVE BEEN RELABELED ON THIS PLAN

HUDSON YARDS - RETAIL PODIUM AND TOWER A

500 WEST 33RD STREET
New York, NY

Client
Related Companies
60 Columbus Circle
New York, NY 10023
TEL: 212.801.1000 FAX: 212.801.1048

Oxford Properties Group
320 Park Avenue, 17th Floor
New York, NY 10022
TEL: 212.986.7514 FAX: 212.986.7510

Architect
Kohn Pedersen Fox Associates
11 West 42nd Street
New York, New York 10036
TEL: 212.977.6500 FAX: 212.956.2526

Structural Engineer
Thornton Tomasetti, Inc.
51 Madison Avenue
New York, New York 10010
TEL: 917.661.7800 FAX: 718.661.7801

Mechanical, Electrical, Plumbing, Fire Protection
Jaros Baum & Bolles Consulting Engineers
80 Pine Street
New York, NY 10013
TEL: 212.530.9300 FAX: 212.269.5894

Retail Interior Design & Planning
Elkus-Manfredi
300 A Street
Boston, MA 02210
TEL: 617.426.1300

No.	Description	Date
1	D.O.B. AMENDMENT #2	10/15/2016

Key Plan

Issue Date: 10/15/2016
Project No. N11328.00
Drawn By Author
Sheet Number

Damian Titus
Buildings
APPROVED
Under Directive 2 of 1975
AMENDED APPLICATION
Date: 05/03/2017
NYC Development Hub

TOWER A ELEVATOR INTERMEDIATE SUPPORT PART PLANS XXXXIII

Drawing Number
S3-6143
B-Scan Drawing Number
S-589.00

© 2013 KOHN PEDERSEN FOX ASSOCIATES PC. All rights reserved.

CERTIFICATE NUMBER: 2016050501 Job Number
B1606050000 Bldg Code

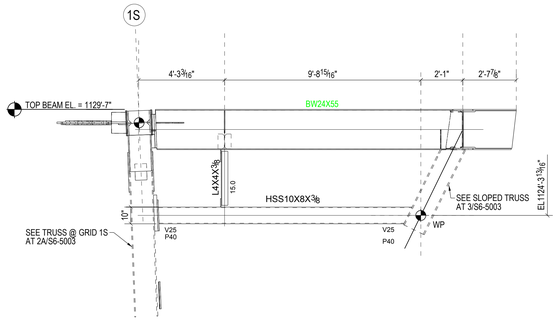

1 **SECTION**
NOT TO SCALE

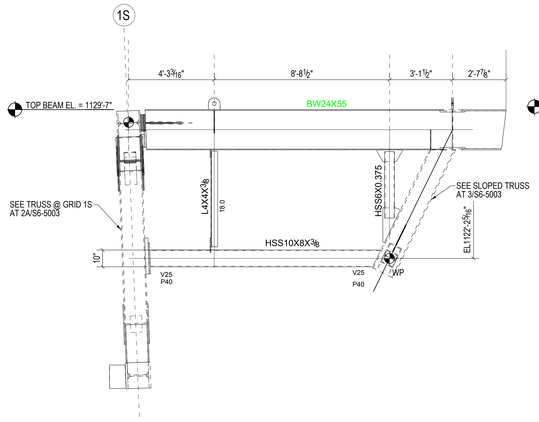

2 **SECTION**
NOT TO SCALE

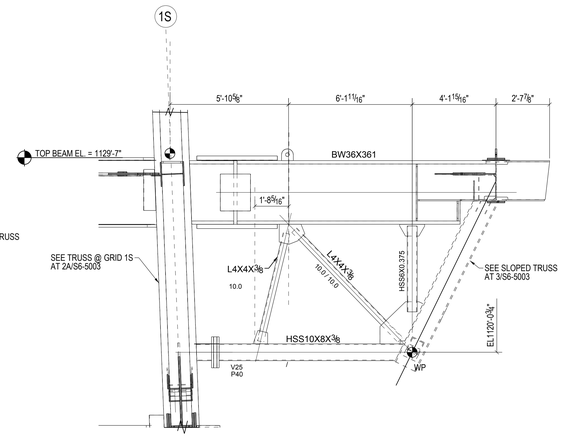

3 **SECTION**
NOT TO SCALE

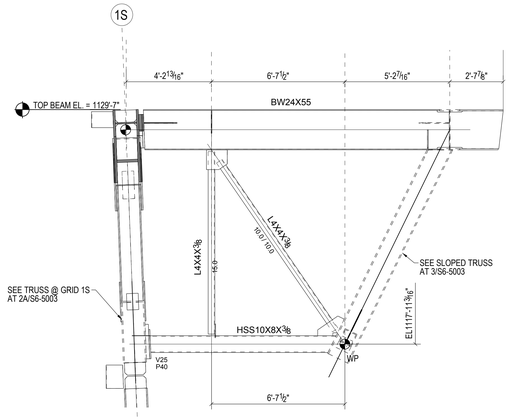

4 **SECTION**
NOT TO SCALE

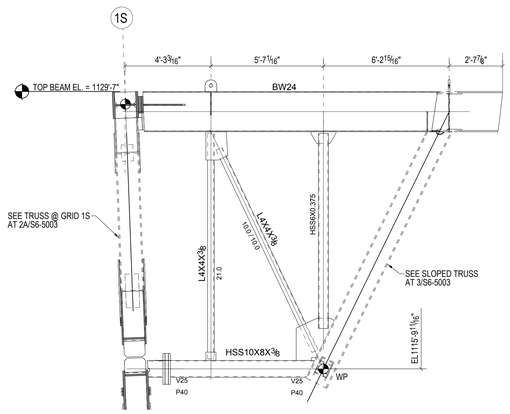

5 **SECTION**
NOT TO SCALE

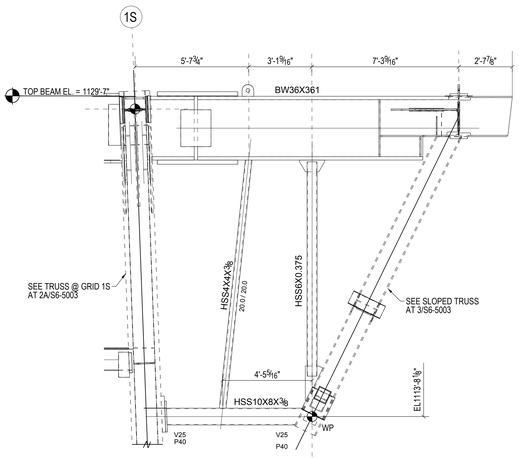

6 **SECTION**
NOT TO SCALE

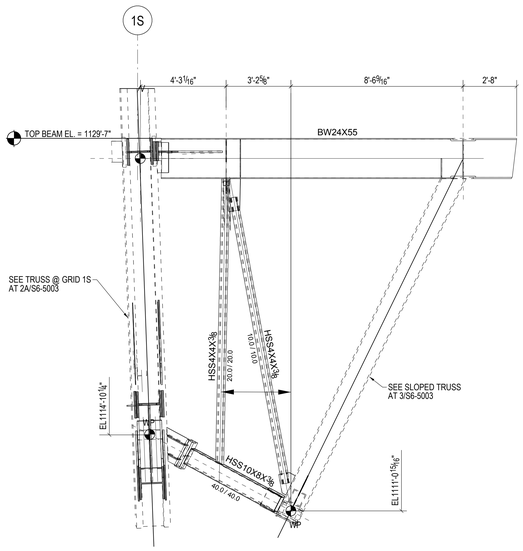

7 **SECTION**
NOT TO SCALE

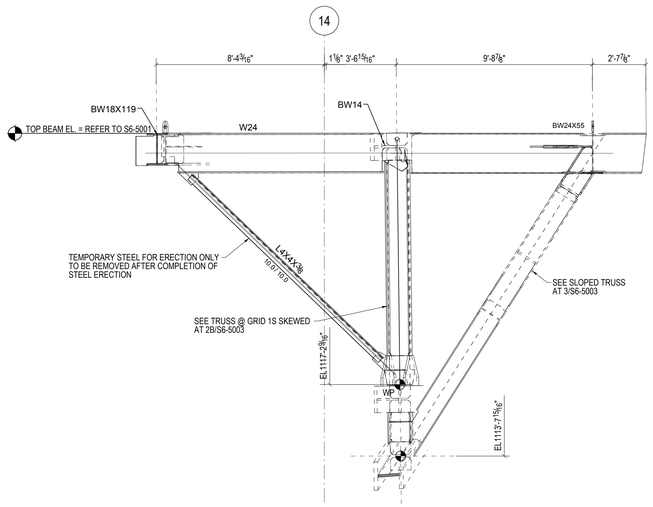

8 **SECTION**
NOT TO SCALE

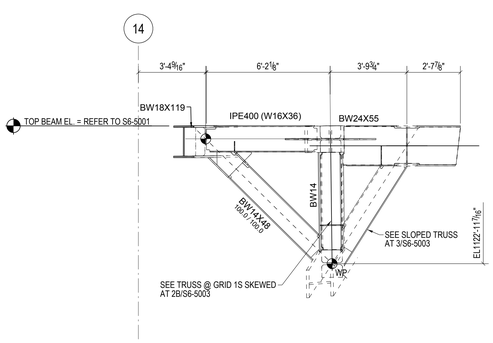

9 **SECTION**
NOT TO SCALE

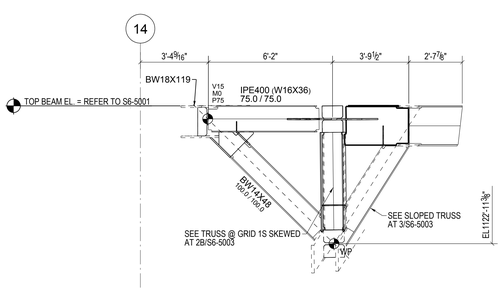

10 **SECTION**
NOT TO SCALE

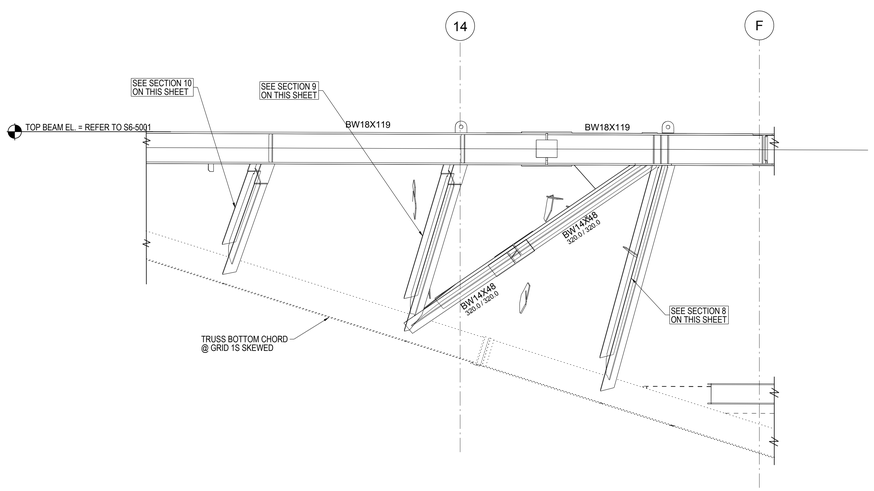

11 **SECTION- SLOPED @ SOUTH OF OCULUS**
NOT TO SCALE

Damian Titus
APPROVED
Under Directive 2 of 1975
EXTENSION OF OPERATION
Date: 09/9/2017
NYC Development Hub

HUDSON YARDS - RETAIL PODIUM AND TOWER A

500 WEST 33RD STREET
New York, NY

Client
Related Companies
60 Columbus Circle
New York, NY 10023
TEL: 212.801.1000 FAX: 212.801.1048

Oxford Properties Group
320 Park Avenue, 17th Floor
New York, NY 10022
TEL: 212.986.7514 FAX: 212.986.7510

Architect
Kohn Pedersen Fox Associates
11 West 42nd Street
New York, New York 10036
TEL: 212.977.6500 FAX: 212.956.2526

Structural Engineer
Thornton Tomasetti, Inc.
51 Madison Avenue
New York, New York 10010
TEL: 917.661.7800 FAX: 718.661.7801

Mechanical, Electrical, Plumbing, Fire Protection
Jaros Baum & Bolles Consulting Engineers
80 Pine Street
New York, NY 10013
TEL: 212.530.9300 FAX: 212.269.5894

Retail Interior Design & Planning
Elkus-Manfredi
300 A Street
Boston, MA 02210
TEL: 617.426.1300

No.	Description	Date
1	D.O.B AMENDMENT #2	10/15/2016

Key Plan

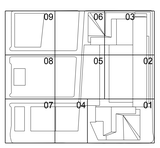

Issue Date 10/15/2016
Project No. N11328.00
Drawn By
Sheet Number

HYE-TA-S6-5004
Drawing Title

OB DECK
TRUSS ELEVATIONS

Drawing Number
S6-5004
Revision Drawing Number
S-591.00

SHEET 378 OF 443

© 2013 KOHN PEDERSEN FOX ASSOCIATES PC. All rights reserved.

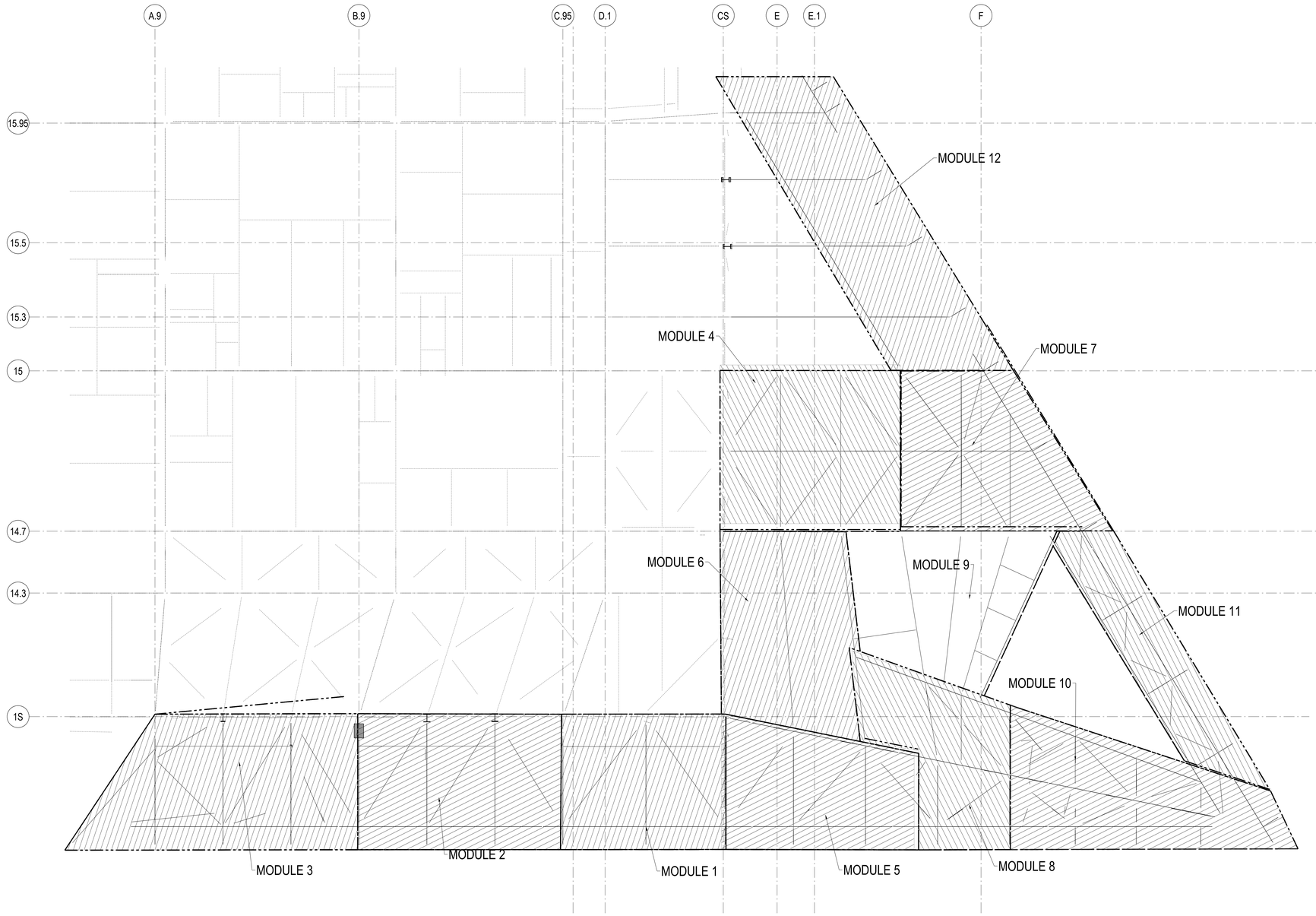

OBSERVATION DECK MODULES- KEY PLAN
NOT TO SCALE

HUDSON YARDS - RETAIL PODIUM AND TOWER A
500 WEST 33RD STREET
New York, NY

Client
Related Companies
60 Columbus Circle
New York, NY 10023
TEL: 212.801.1000 FAX: 212.801.1048

Oxford Properties Group
320 Park Avenue, 17th Floor
New York, NY 10022
TEL: 212.986.7514 FAX: 212.986.7510

Architect
Kohn Pedersen Fox Associates
11 West 42nd Street
New York, New York 10036
TEL: 212.977.6500 FAX: 212.956.2526

Structural Engineer
Thornton Tomasetti, Inc.
51 Madison Avenue
New York, New York 10010
TEL: 917.661.7800 FAX: 718.661.7801

Mechanical, Electrical, Plumbing, Fire Protection
Jaros Baum & Bolles Consulting Engineers
80 Pine Street
New York, NY 10013
TEL: 212.530.9300 FAX: 212.269.5894

Retail Interior Design & Planning
Elkus-Manfredi
300 A Street
Boston, MA 02210
TEL: 617.426.1300

No.	Description	Date
1	D.O.B AMENDMENT #2	10/15/2016

Key Plan

Issue Date 10/15/2016
Project No. N11328.00
Drawn By
Sheet Number

HYE-TA-S6-5005
Drawing Title

OBSERVATION DECK MODULES- KEY PLAN

Drawing Number
S6-5005
B-Scan Drawing Number
S-592.00

Damian Titus
Buildings
APPROVED
Under Directive 2 of 1975
AMENDED APPLICATION
Date: 05/03/2017
NYC Development Hub

SHEET 379 OF 443

© 2013 KOHN PEDERSEN FOX ASSOCIATES PC. All rights reserved.

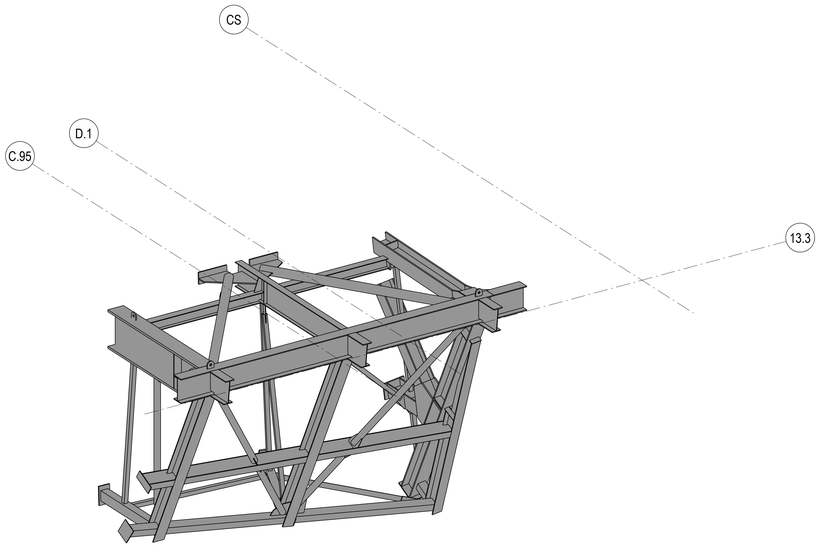

1 MODULE 1
1:48

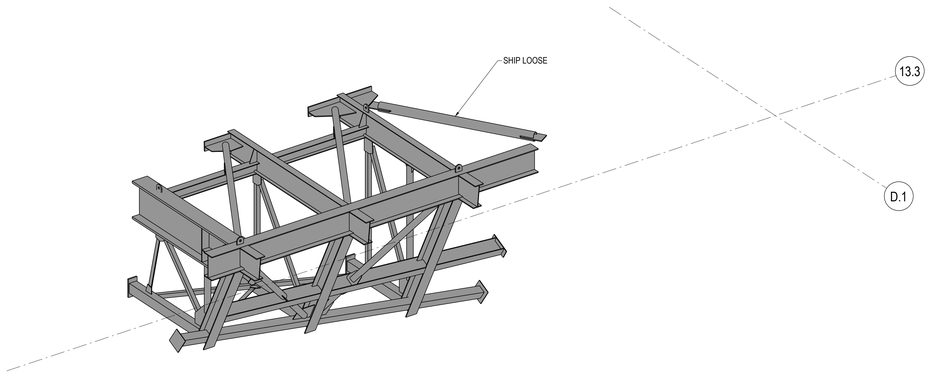

2 MODULE 2
1:48

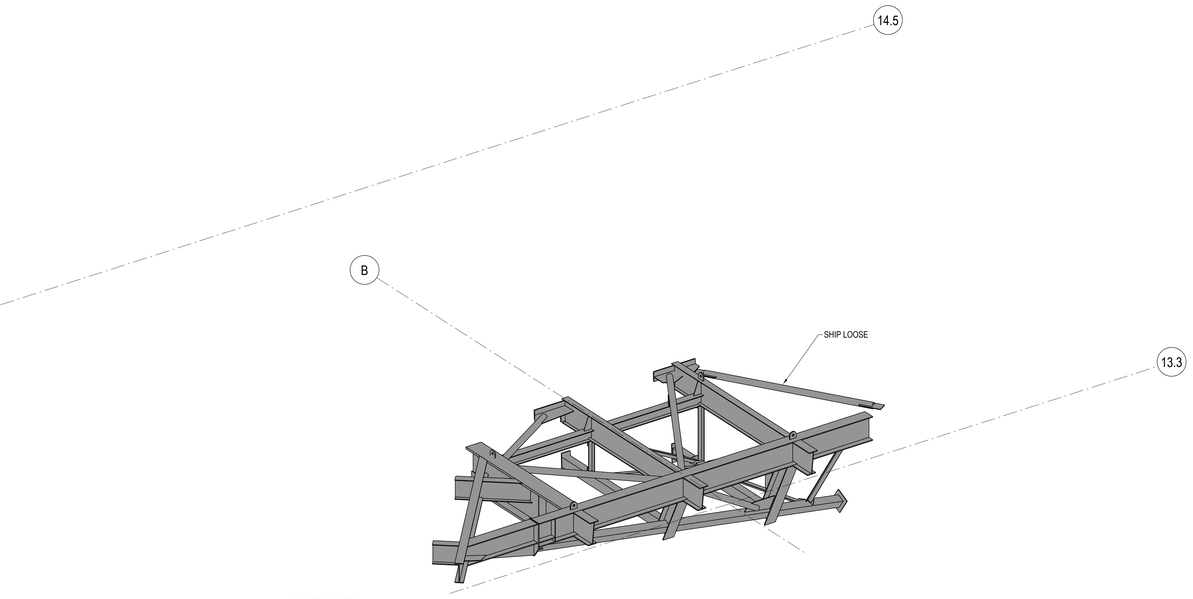

3 MODULE 3
1:48

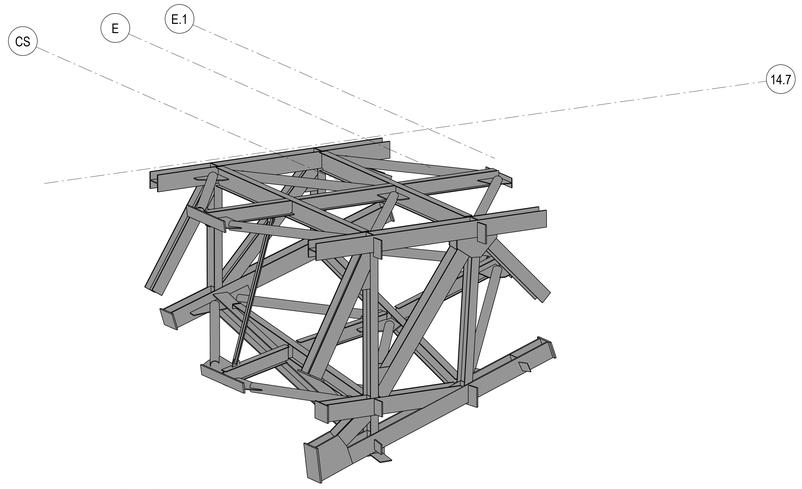

4 MODULE 4
1:48

HUDSON YARDS - RETAIL PODIUM AND TOWER A

500 WEST 33RD STREET
New York, NY

Client
Related Companies
60 Columbus Circle
New York, NY 10023
TEL: 212.801.1000 FAX: 212.801.1048

Oxford Properties Group
320 Park Avenue, 17th Floor
New York, NY 10022
TEL: 212.986.7514 FAX: 212.986.7510

Architect
Kohn Pedersen Fox Associates
11 West 42nd Street
New York, New York 10036
TEL: 212.977.6500 FAX: 212.956.2526

Structural Engineer
Thornton Tomasetti, Inc.
51 Madison Avenue
New York, New York 10010
TEL: 917.661.7800 FAX: 718.661.7801

Mechanical, Electrical, Plumbing, Fire Protection
Jaros Baum & Bolles Consulting Engineers
80 Pine Street
New York, NY 10013
TEL: 212.530.9300 FAX: 212.269.5894

Retail Interior Design & Planning
Elkus-Manfredi
300 A Street
Boston, MA 02210
TEL: 617.426.1300

No.	Description	Date
1	D.O.B AMENDMENT #2	10/15/2016

Key Plan

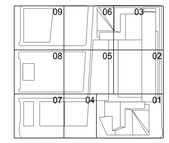

Issue Date 10/15/2016
Project No. N11328.00
Drawn By
Sheet Number

Damian Titus
Buildings
APPROVED
Under Directive 2 of 1975
MUNICIPAL REGULATION
Date: 05/03/2017
NYC Development Hub

HYE-TA-S6-5006

OBSERVATION DECK -ISOMET MODULES (1-4)

Drawing Number
S6-5006
As Issue Drawing Number
S-593.00

© 2013 KOHN PEDERSEN FOX ASSOCIATES PC. All rights reserved.

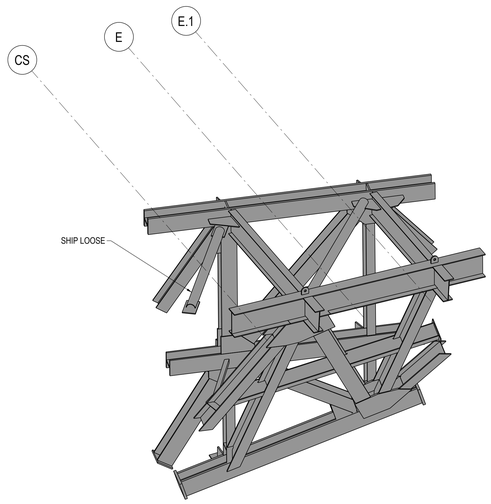

1 MODULE 5
1:48

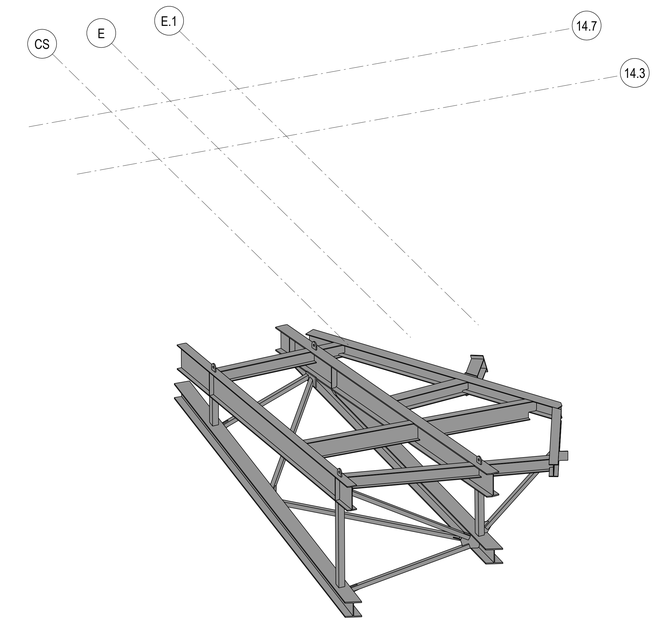

2 MODULE 6
1:48

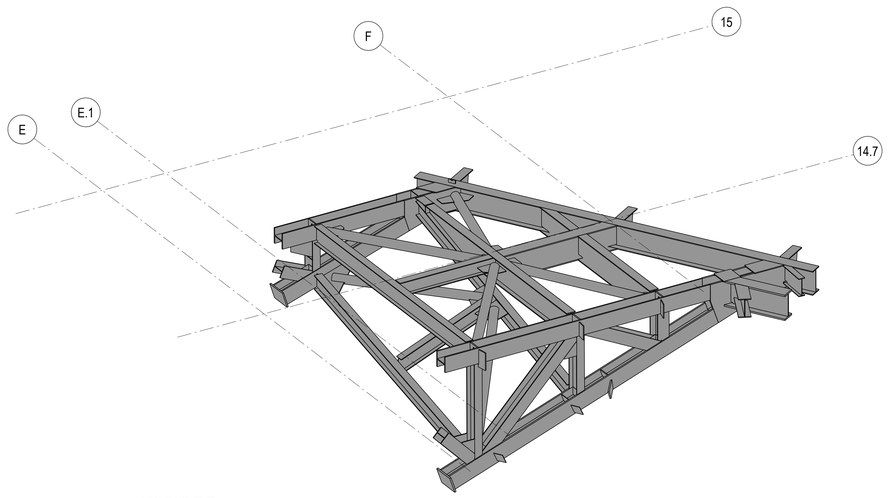

3 MODULE 7
1:48

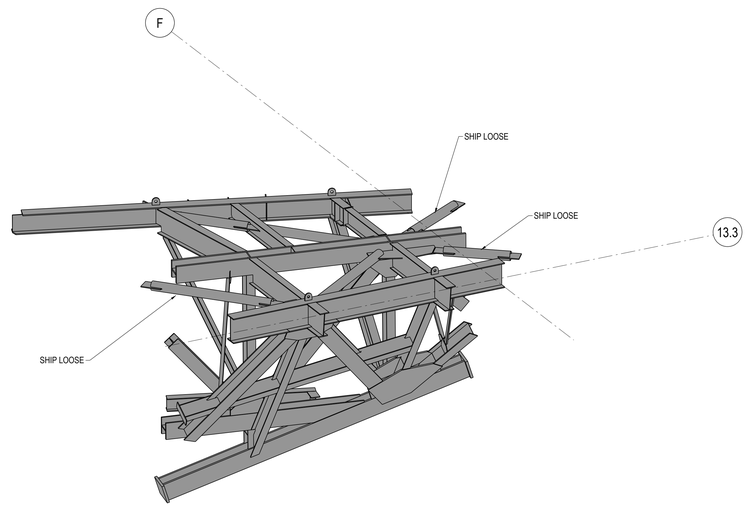

4 MODULE 8
1:48

HUDSON YARDS - RETAIL PODIUM AND TOWER A

500 WEST 33RD STREET
New York, NY

Client
Related Companies
60 Columbus Circle
New York, NY 10023
TEL: 212.801.1000 FAX: 212.801.1048

Oxford Properties Group
320 Park Avenue, 17th Floor
New York, NY 10022
TEL: 212.986.7514 FAX: 212.986.7510

Architect
Kohn Pedersen Fox Associates
11 West 42nd Street
New York, New York 10036
TEL: 212.977.6500 FAX: 212.956.2526

Structural Engineer
Thornton Tomasetti, Inc.
51 Madison Avenue
New York, New York 10010
TEL: 917.661.7800 FAX: 718.661.7801

Mechanical, Electrical, Plumbing, Fire Protection
Jaros Baum & Bolles Consulting Engineers
80 Pine Street
New York, NY 10013
TEL: 212.530.9300 FAX: 212.269.5894

Retail Interior Design & Planning
Elkus-Manfredi
300 A Street
Boston, MA 02210
TEL: 617.426.1300

No	Description	Date
1	D.O.B AMENDMENT #2	10/15/2016

Key Plan

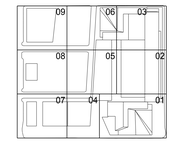

Issue Date 10/15/2016
Project No. N11328.00
Drawn By
Sheet Number

HYE-TA-S6-5007
Drawing Title

OBSERVATION DECK- ISOMET MODULES (5-8)

Drawing Number
S6-5007
Kohn Drawing Number
S-594.00

SHEET 381 OF 443

Damian Titus
Buildings
APPROVED
Under Directive 2 of 1975
MUNICIPAL REGULATION
Date: 05/03/2017
NYC Development Hub

© 2013 KOHN PEDERSEN FOX ASSOCIATES PC. All rights reserved.

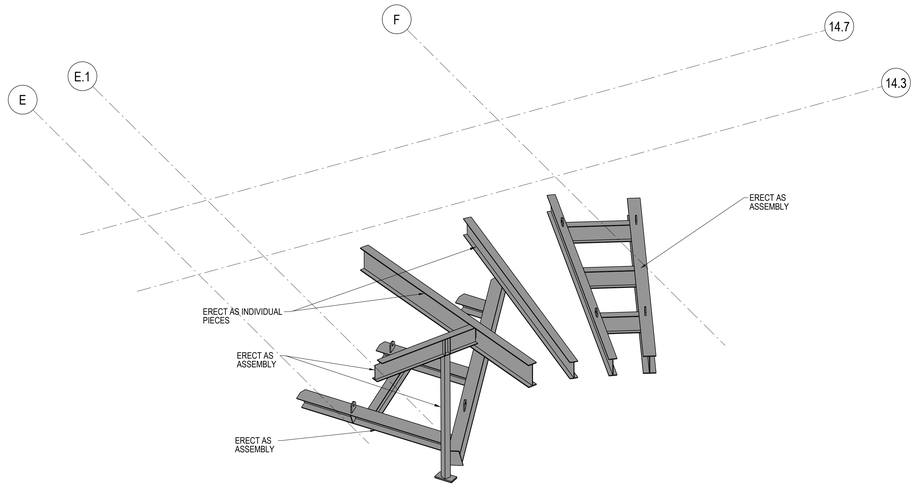

1 MODULE 9
1:48

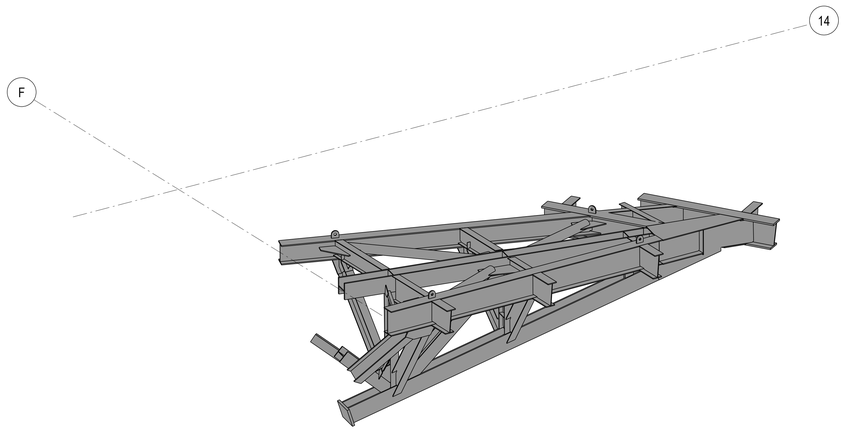

2 MODULE 10
1:48

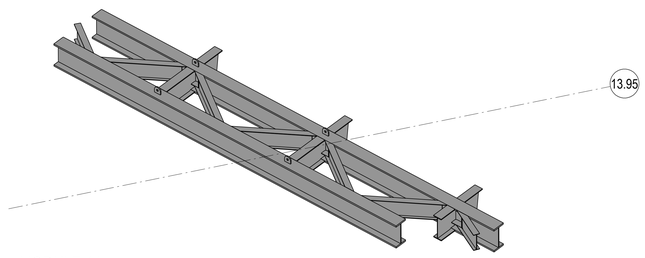

3 MODULE 11
1:48

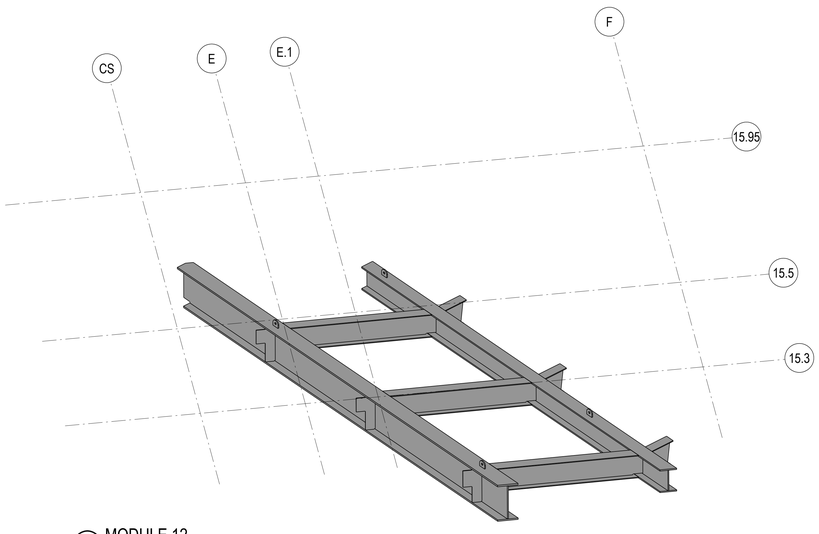

4 MODULE 12
1:48

Damian Titus
Buildings
APPROVED
Under Directive 2 of 1975
MUNICIPAL REGULATION
Date: 05/03/2017
NYC Development Hub

HUDSON YARDS - RETAIL PODIUM AND TOWER A

500 WEST 33RD STREET
New York, NY

Client
Related Companies
60 Columbus Circle
New York, NY 10023
TEL: 212.801.1000 FAX: 212.801.1048

Oxford Properties Group
320 Park Avenue, 17th Floor
New York, NY 10022
TEL: 212.986.7514 FAX: 212.986.7510

Architect
Kohn Pedersen Fox Associates
11 West 42nd Street
New York, New York 10036
TEL: 212.977.6500 FAX: 212.956.2526

Structural Engineer
Thornton Tomasetti, Inc.
51 Madison Avenue
New York, New York 10010
TEL: 917.661.7800 FAX: 718.661.7801

Mechanical, Electrical, Plumbing, Fire Protection
Jaros Baum & Bolles Consulting Engineers
80 Pine Street
New York, NY 10013
TEL: 212.530.9300 FAX: 212.269.5894

Retail Interior Design & Planning
Elkus-Manfredi
300 A Street
Boston, MA 02210
TEL: 617.426.1300

No	Description	Date
1	D.O.B AMENDMENT #2	10/15/2016

Key Plan

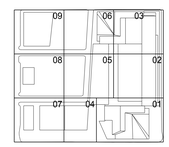

Issue Date 10/15/2016
Project No. N11328.00
Drawn By
Sheet Number

THE STATE OF NEW YORK
DANIEL J. FOX
OFFICE OF
NATIONAL AFFAIRS

HYE-TA-S6-5008

OBSERVATION DECK -ISOMET MODULES (9-12)

Drawing Number
S6-5008
Kohn Drawing Number
S-595.00

© 2013 KOHN PEDERSEN FOX ASSOCIATES PC. All rights reserved.

DEPT OF BLDGS 421305225 Job Number
E-DOB-0000000001 Scan Code

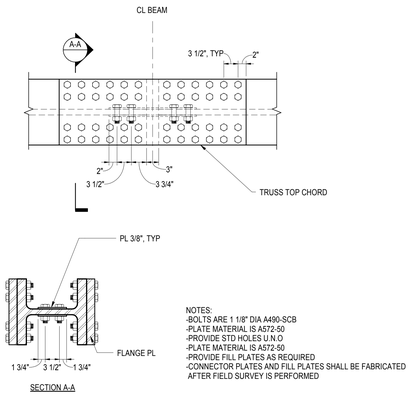

NOTES:
-BOLTS ARE 1 1/8" DIA A490-SCB
-PLATE MATERIAL IS A572-50
-PROVIDE STD HOLES U.N.O
-PLATE MATERIAL IS A572-50
-PROVIDE FILL PLATES AS REQUIRED
-CONNECTOR PLATES AND FILL PLATES SHALL BE FABRICATED AFTER FIELD SURVEY IS PERFORMED

1 TYPICAL TOWER TO MODULE TENSION SPLICE
1" = 1'-0"

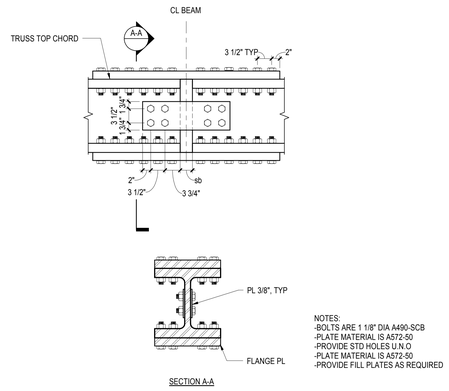

NOTES:
-BOLTS ARE 1 1/8" DIA A490-SCB
-PLATE MATERIAL IS A572-50
-PROVIDE STD HOLES U.N.O
-PLATE MATERIAL IS A572-50
-PROVIDE FILL PLATES AS REQUIRED

2 TYPICAL MODULE TO MODULE TENSION SPLICE
1" = 1'-0"

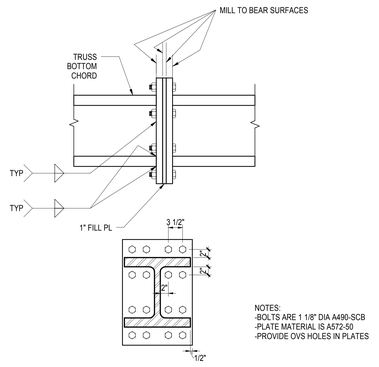

NOTES:
-BOLTS ARE 1 1/8" DIA A490-SCB
-PLATE MATERIAL IS A572-50
-PROVIDE OVS HOLES IN PLATES

3 TYPICAL MODULE COMPRESSION SPLICE
1" = 1'-0"

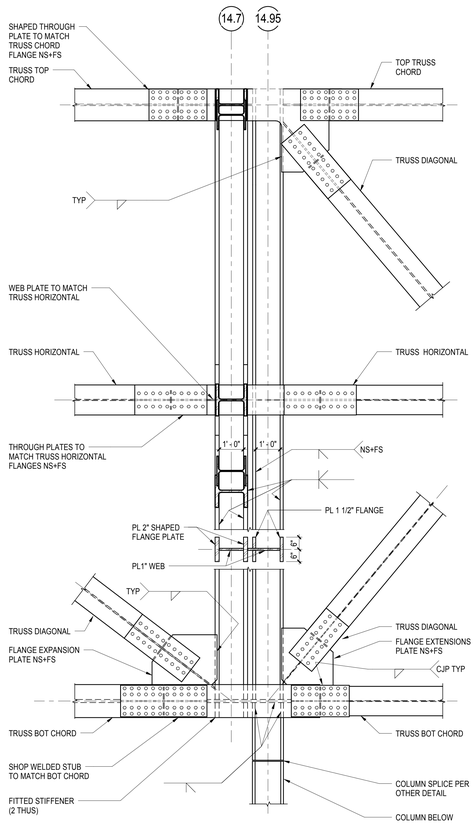

4 SHEAR PANEL AT TRUSS 14.7
1/2" = 1'-0"

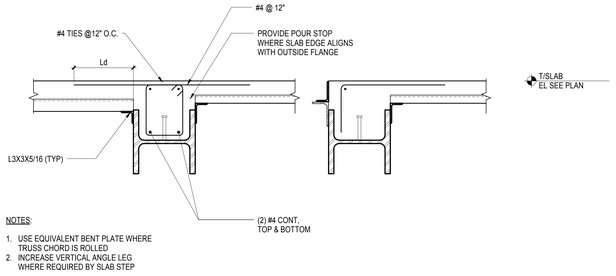

NOTES:
1. USE EQUIVALENT BENT PLATE WHERE TRUSS CHORD IS ROLLED
2. INCREASE VERTICAL ANGLE LEG WHERE REQUIRED BY SLAB STEP

TYPICAL DECK SUPPORT AT WEB HORIZONTAL TRUSS MEMBER AT LEVEL 66U
5
1" = 1'-0"

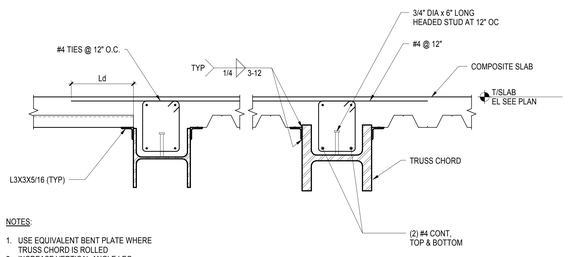

NOTES:
1. USE EQUIVALENT BENT PLATE WHERE TRUSS CHORD IS ROLLED
2. INCREASE VERTICAL ANGLE LEG WHERE REQUIRED BY SLAB STEP

TYPICAL DECK SUPPORT AT WEB HORIZONTAL TRUSS MEMBER AT LEVEL 67
6
1" = 1'-0"

HUDSON YARDS - RETAIL PODIUM AND TOWER A

500 WEST 33RD STREET
New York, NY

Client
Related Companies
60 Columbus Circle
New York, NY 10023
TEL: 212.801.1000 FAX: 212.801.1048

Oxford Properties Group
320 Park Avenue, 17th Floor
New York, NY 10022
TEL: 212.986.7514 FAX: 212.986.7510

Architect
Kohn Pedersen Fox Associates
11 West 42nd Street
New York, New York 10036
TEL: 212.977.6500 FAX: 212.956.2526

Structural Engineer
Thornton Tomasetti, Inc.
51 Madison Avenue
New York, New York 10010
TEL: 917.661.7800 FAX: 718.661.7801

Mechanical, Electrical, Plumbing, Fire Protection
Jaros Baum & Bolles Consulting Engineers
80 Pine Street
New York, NY 10013
TEL: 212 530.9300 FAX: 212.269.5894

Retail Interior Design & Planning
Elkus-Manfredi
300 A Street
Boston, MA 02210
TEL: 617.426.1300

No.	Description	Date
1	D.O.B AMENDMENT #2	10/15/2016

Key Plan

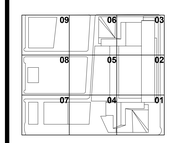

Issue Date 10/15/2016
Project No. N11328.00
Drawn By
Sheet Number

Drawing Title

OBSERVATION DECK TRUSS DETAILS

Drawing Number
S6-5100
Scan Drawing Number
S-596.00

SHEET 383 OF 443

Damian Titus

APPROVED
Under Directive 2 of 1975
AMENDED APPLICATION
Date: 05/01/2017
NYC Development Hub

0 4" 8" 16"

S6-5100
10/7/2016 11:19:03 AM
OBSERVATION DECK TRUSS DETAILS
I:\11328\400-Arch\Sheet Files\Observation Deck_Central_detailed.rvt

DEPT OF BLDGS 421395255 Job Number
E3922743879 Scan Code

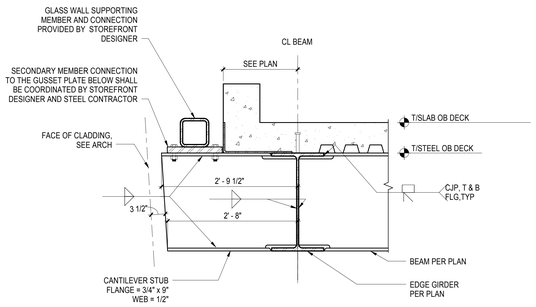

1 OBSERVATION DECK GLASS WALL BEAM STUB
1" = 1'-0"

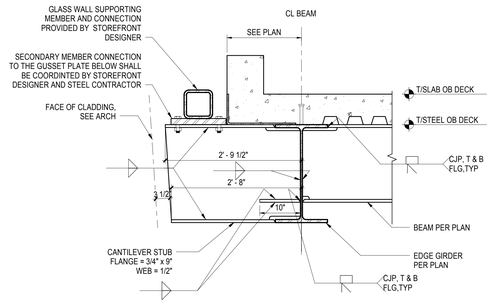

2 OBSERVATION DECK GLASS WALL BEAM STUB - BACKSPAN BEAM SHALLOWER THAN STUB
1" = 1'-0"

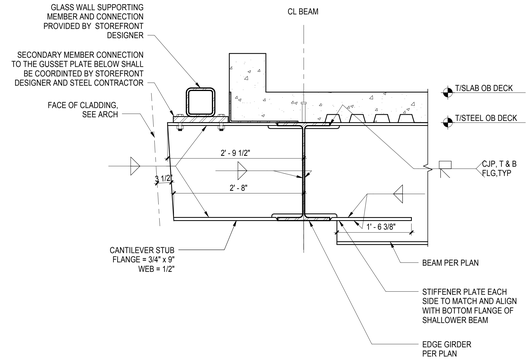

3 OBSERVATION DECK GLASS WALL BEAM STUB - BACKSPAN BEAM DEEPER THAN STUB
1" = 1'-0"

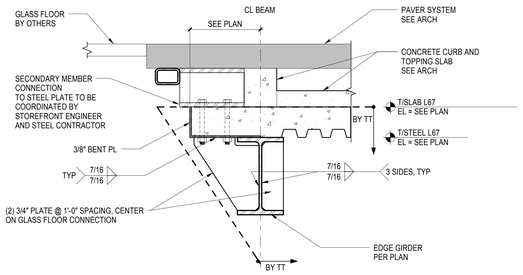

4 LEVEL 67 GLASS FLOOR DETAIL
1" = 1'-0"

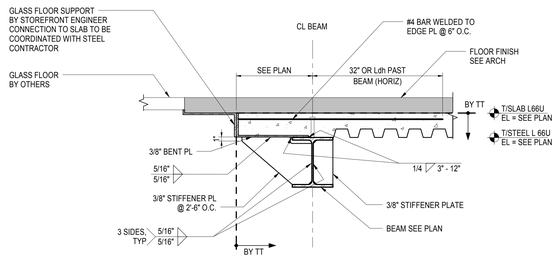

5 HULL GLASS FLOOR DETAIL
1" = 1'-0"

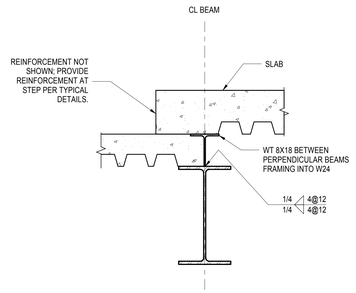

6 SLAB STEP DETAIL
1" = 1'-0"

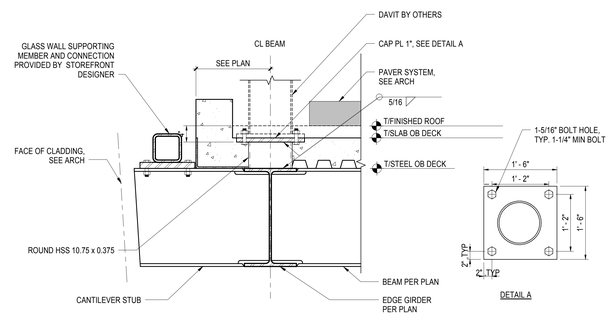

7 OBSERVATION DECK BEAM STUB DAVIT DETAIL
1" = 1'-0"

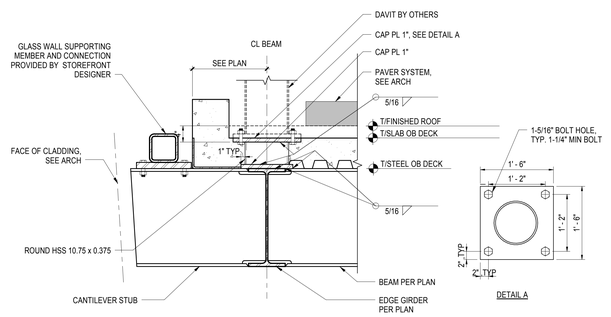

8 OBSERVATION DECK BEAM STUB DAVIT DETAIL
1" = 1'-0"

HUDSON YARDS - RETAIL PODIUM AND TOWER A
500 WEST 33RD STREET
New York, NY

Client
Related Companies
60 Columbus Circle
New York, NY 10023
TEL: 212.801.1000 FAX: 212.801.1048

Oxford Properties Group
320 Park Avenue, 17th Floor
New York, NY 10022
TEL: 212.986.7514 FAX: 212.986.7510

Architect
Kohn Pedersen Fox Associates
11 West 42nd Street
New York, New York 10036
TEL: 212.977.6500 FAX: 212.956.2526

Structural Engineer
Thornton Tomasetti, Inc.
51 Madison Avenue
New York, New York 10010
TEL: 917.661.7800 FAX: 718.661.7801

Mechanical, Electrical, Plumbing, Fire Protection
Jaros Baum & Bolles Consulting Engineers
80 Pine Street
New York, NY 10013
TEL: 212.530.9300 FAX: 212.269.5894

Retail Interior Design & Planning
Elkus-Manfredi
300 A Street
Boston, MA 02210
TEL: 617.426.1300

No	Description	Date
1	D.O.B AMENDMENT #2	10/15/2016

Key Plan

09 06 03
08 05 02
07 04 01

Issue Date 10/15/2016
Project No. N11328.00
Drawn By
Sheet Number

HYE-TA-S6-5101

Drawing Title

OBSERVATION DECK DETAILS

Drawing Number
S6-5101
Revision Drawing Number
1

APPROVED
Under Directive 2 of 1975
AMENDED APPLICATION
Date: 05/03/2017
NYC Development Hub

Damian Titus

0 4' 8' 16'

S-597.00

S6-5101
10/21/2016 11:19:04 AM
OBSERVATION DECK DETAILS
T:\11328\05 Build Observation Deck_Cornice_detached.rvt

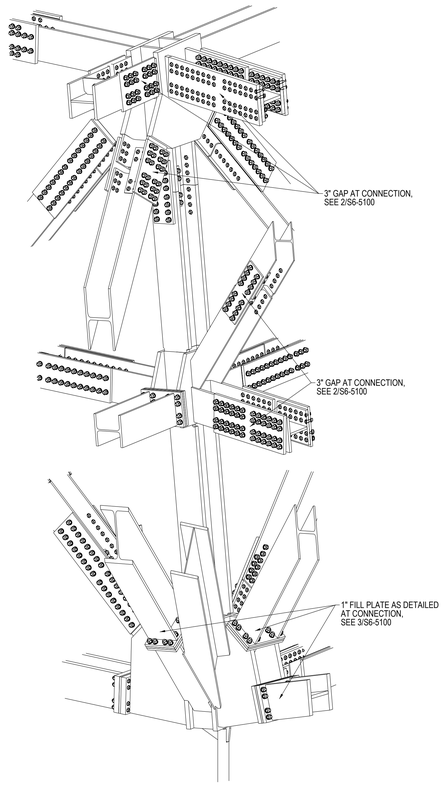

1 MODULES 1 AND 5 CONNECTIONS AT TOWER
GRID 1S/CS

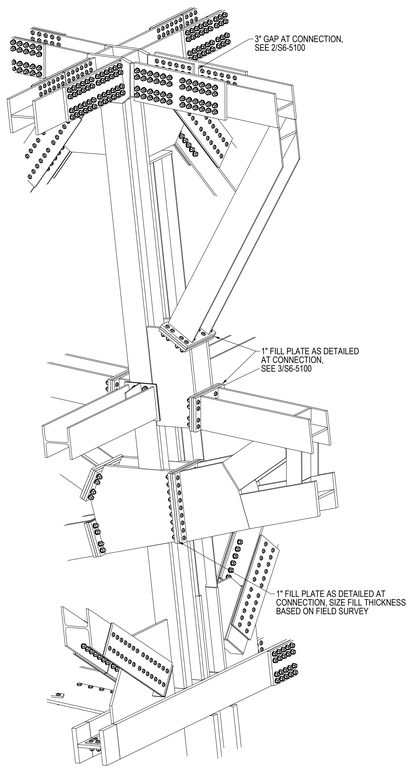

2 MODULES 4 CONNECTIONS AT TOWER
GRID 14.7/CS

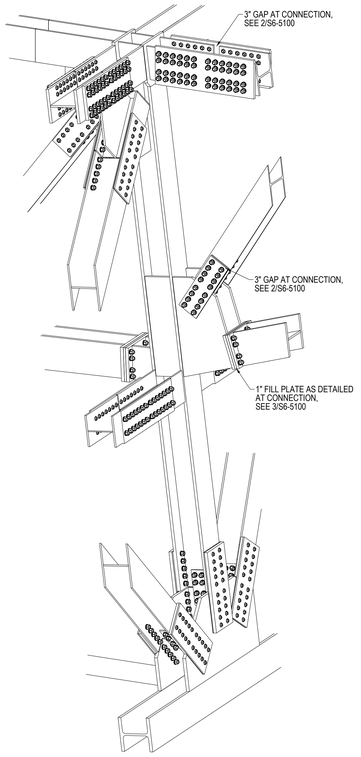

3 MODULES 4 CONNECTIONS AT TOWER
GRID 15/CS

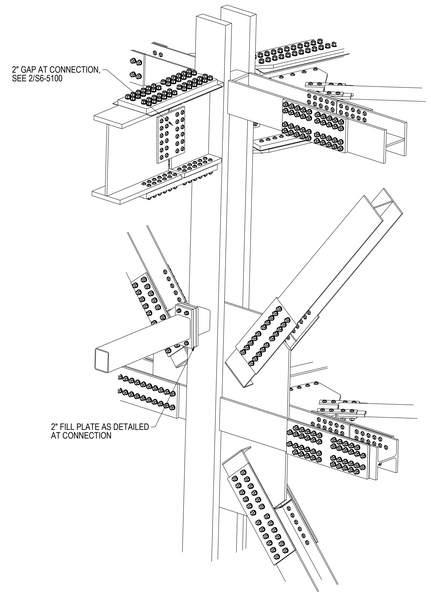

4 MODULES 1,2,3 MOMENT CONNECTIONS TO TOWER
ALONG GRID CS

Damian Titus
Buildings
APPROVED
Under Directive 2 of 1975
MUNICIPALBUILDING
Date: 05/03/2017
NYC Development Hub

HUDSON YARDS - RETAIL PODIUM AND TOWER A

500 WEST 33RD STREET
New York, NY

Client
Related Companies
60 Columbus Circle
New York, NY 10023
TEL: 212.801.1000 FAX: 212.801.1048

Oxford Properties Group
320 Park Avenue, 17th Floor
New York, NY 10022
TEL: 212.986.7514 FAX: 212.986.7510

Architect
Kohn Pedersen Fox Associates
11 West 42nd Street
New York, New York 10036
TEL: 212.977.6500 FAX: 212.956.2526

Structural Engineer
Thornton Tomasetti, Inc.
51 Madison Avenue
New York, New York 10010
TEL: 917.661.7800 FAX: 718.661.7801

Mechanical, Electrical, Plumbing, Fire Protection
Jaros Baum & Bolles Consulting Engineers
80 Pine Street
New York, NY 10013
TEL: 212.530.9300 FAX: 212.269.5894

Retail Interior Design & Planning
Elkus-Manfredi
300 A Street
Boston, MA 02210
TEL: 617.426.1300

No	Description	Date
1	D.O.B AMENDMENT #2	10/15/2016

Key Plan

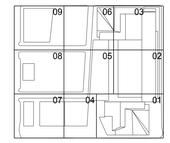

Issue Date 10/15/2016
Project No. N11328.00
Drawn By
Sheet Number

HYE-TA-S6-5102
Drawing Title

OBSERVATION DECK DETAILS

Drawing Number
S6-5102
Kohn Drawing Number
S-598.00

© 2013 KOHN PEDERSEN FOX ASSOCIATES PC. All rights reserved.

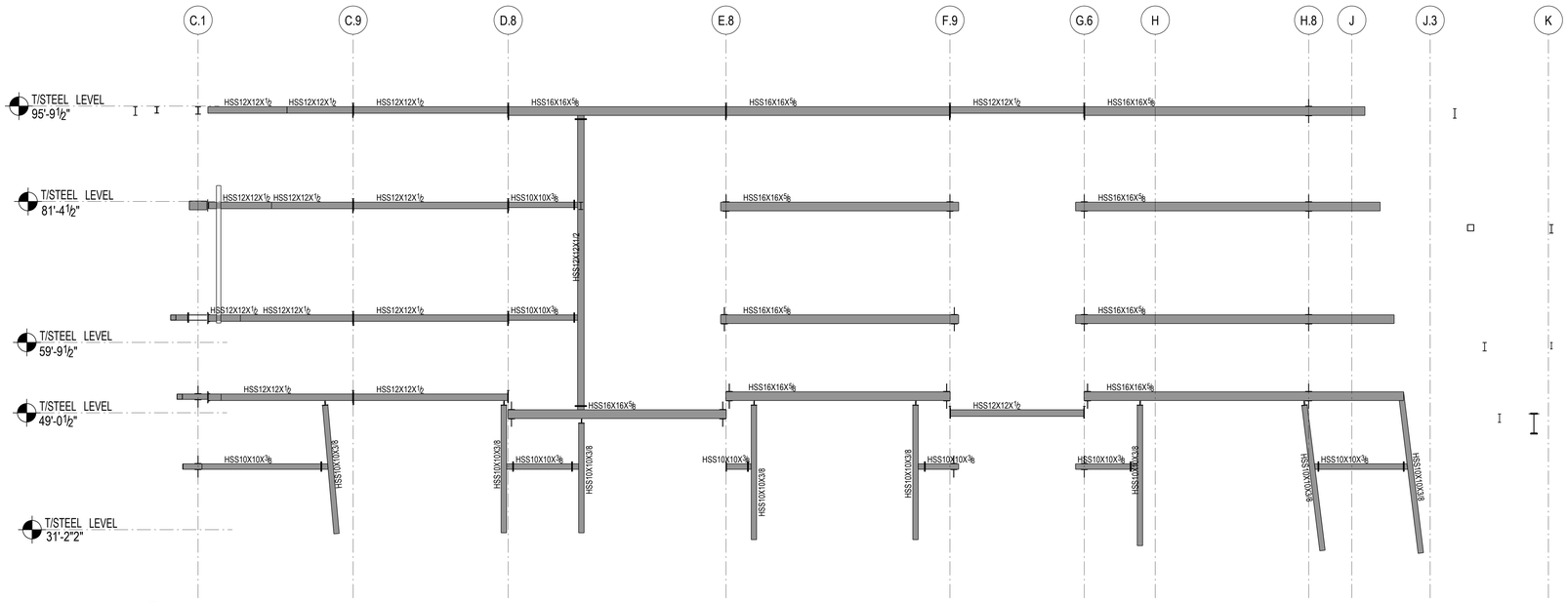

1 NORTH FACADE GIRTS ELEVATION

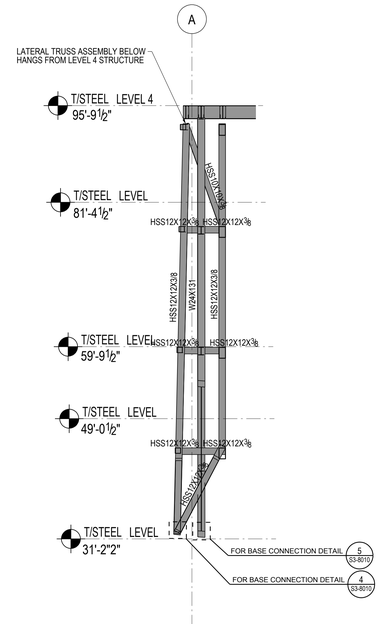

2 GIRT LATERAL SUPPORT ELEVATION

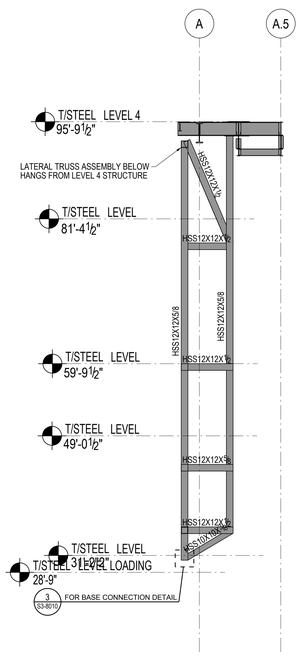

3 GIRT LATERAL SUPPORT ELEVATION

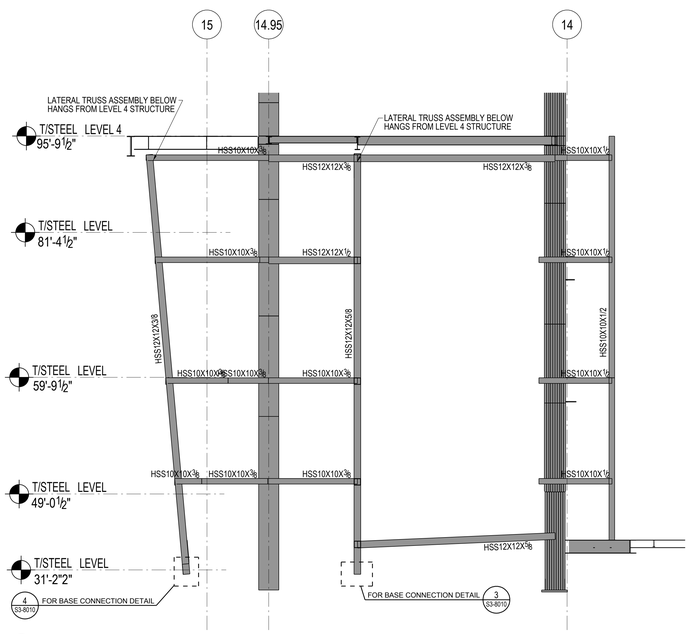

4 WEST FACADE GIRTS ELEVATION

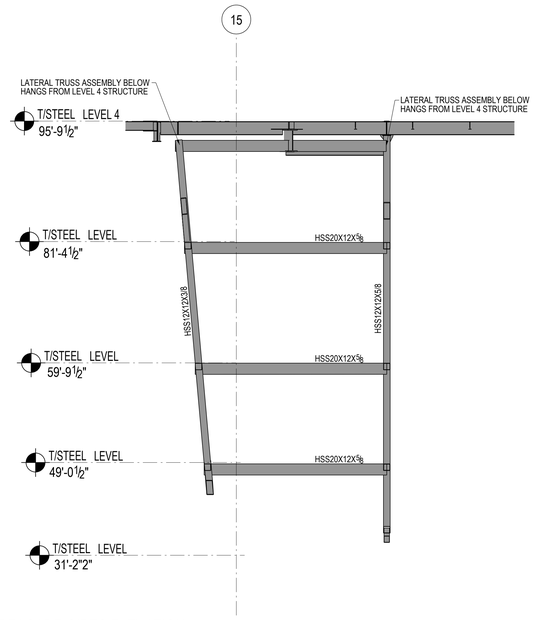

5 WEST FACADE GIRTS ELEVATION

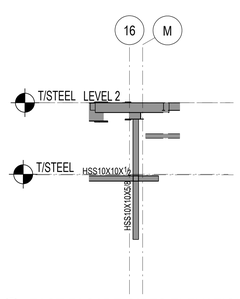

6 EAST FACADE GIRTS ELEVATION

Damian Titus
Buildings
APPROVED
Under Directive 2 of 1975
AMENDED APPLICATION
Date: 05/03/2017
NYC Development Hub

HUDSON YARDS - RETAIL PODIUM AND TOWER A

500 WEST 33RD STREET
New York, NY

Client
Related Companies
60 Columbus Circle
New York, NY 10023
TEL: 212.801.1000 FAX: 212.801.1048

Oxford Properties Group
320 Park Avenue, 17th Floor
New York, NY 10022
TEL: 212.986.7514 FAX: 212.986.7510

Architect
Kohn Pedersen Fox Associates
11 West 42nd Street
New York, New York 10036
TEL: 212.977.6500 FAX: 212.956.2526

Structural Engineer
Thornton Tomasetti, Inc.
51 Madison Avenue
New York, New York 10010
TEL: 917.661.7800 FAX: 718.661.7801

Mechanical, Electrical, Plumbing, Fire Protection
Jaros Baum & Bolles Consulting Engineers
80 Pine Street
New York, NY 10013
TEL: 212.530.9300 FAX: 212.269.5894

Retail Interior Design & Planning
Elkus-Manfredi
300 A Street
Boston, MA 02210
TEL: 617.426.1300

No.	Description	Date
1	D.O.B AMENDMENT #2	10/15/2016

Key Plan

Issue Date 10/15/2016
Project No. N11328.00
Drawn By
Sheet Number

HYE-TA-S6-7001
Drawing Title

ELEVATIONS AT FACADE GIRTS

Drawing Number
S6-7001
B-Scan Drawing Number
S-609.00

SHEET 386 OF 443

© 2013 KOHN PEDERSEN FOX ASSOCIATES PC All rights reserved

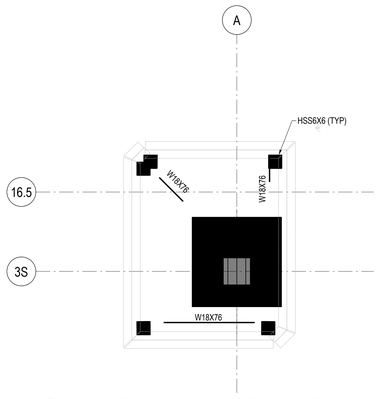

1 STONE CLAD COLUMN BASE SUPPORT
AT T.O.S EL.33'-4 ½"

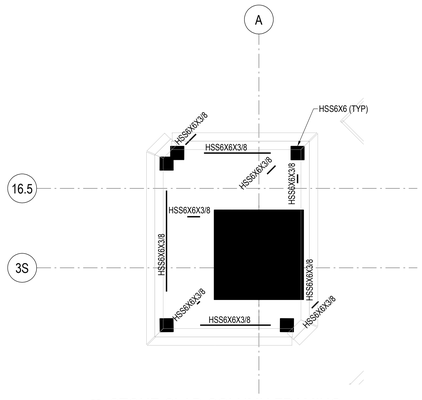

2 STONE CLAD COLUMN FRAMING
AT T.O.S EL.35'-7 ½"

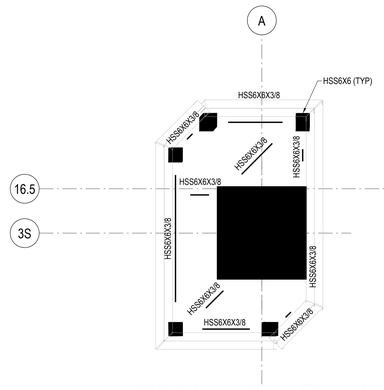

3 STONE CLAD COLUMN FRAMING
AT T.O.S EL.49'-1 ½"

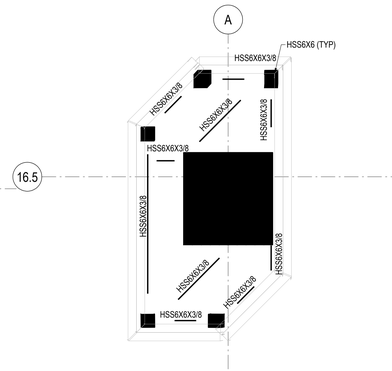

4 STONE CLAD COLUMN FRAMING
AT T.O.S EL.62'-7 ½"

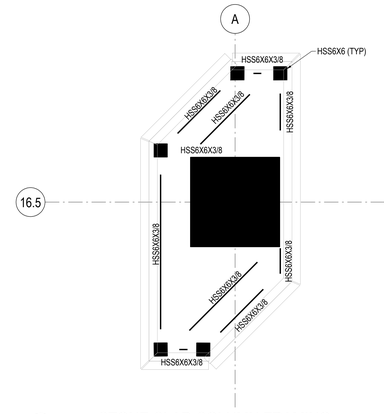

5 STONE CLAD COLUMN FRAMING
AT T.O.S EL.76'-1 ½"

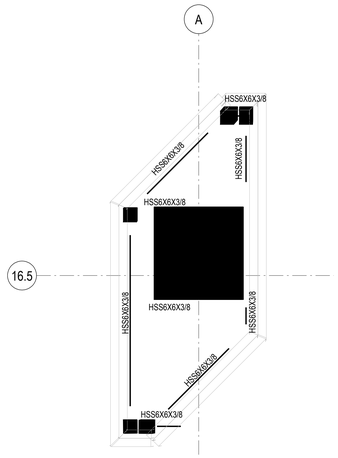

6 STONE CLAD COLUMN FRAMING
AT T.O.S EL.89'-7 ½"

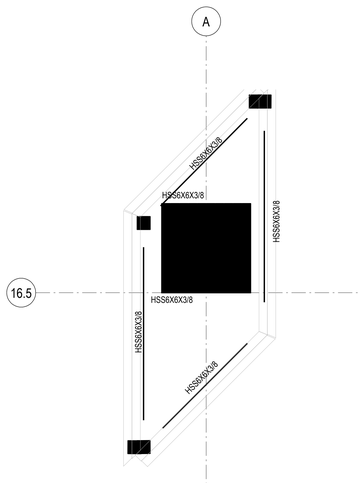

7 STONE CLAD COLUMN FRAMING
AT T.O.S EL.103'-1 ½"

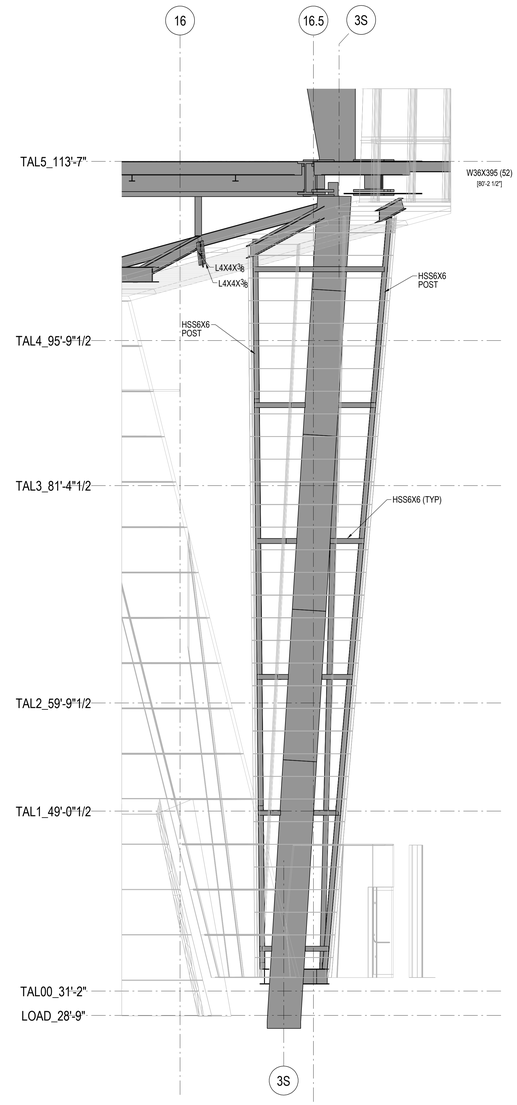

8 EAST ELEVATION OF STONE CLADDING SUPPORT AROUND COLUMN A-16.4/3 S
(OPP HAND SIM AT COLUMN A.8/AS-17 ALONG GRIDLINE 17)

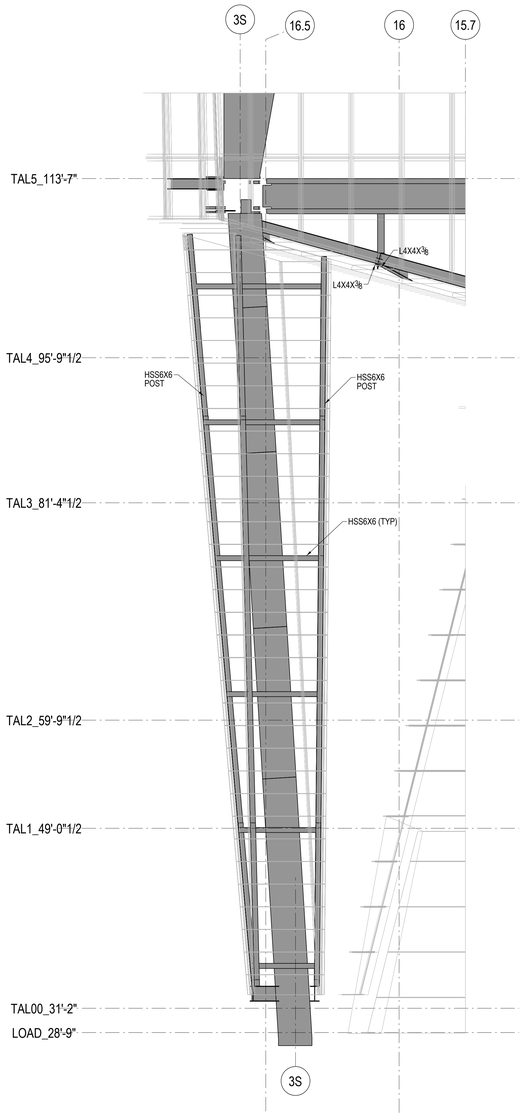

9 WEST ELEVATION OF STONE CLADDING SUPPORT AROUND COLUMN A-16.4/3 S
(OPP HAND SIM AT COLUMN A.8/AS-17 ALONG GRIDLINE 17)

Damian Titus
Buildings
APPROVED
Under Directive 2 of 1975
MODIFICATIONS
Date: 05/03/2017
NYC Development Hub

0 4' 8' 16'

HUDSON YARDS - RETAIL PODIUM AND TOWER A

500 WEST 33RD STREET
New York, NY

Client
Related Companies
60 Columbus Circle
New York, NY 10023
TEL: 212.801.1000 FAX: 212.801.1048

Oxford Properties Group
320 Park Avenue, 17th Floor
New York, NY 10022
TEL: 212.986.7514 FAX: 212.986.7510

Architect
Kohn Pedersen Fox Associates
11 West 42nd Street
New York, New York 10036
TEL: 212.977.6500 FAX: 212.956.2526

Structural Engineer
Thornton Tomasetti, Inc.
51 Madison Avenue
New York, New York 10010
TEL: 917.661.7800 FAX: 718.661.7801

Mechanical, Electrical, Plumbing, Fire Protection
Jaros Baum & Bolles Consulting Engineers
80 Pine Street
New York, NY 10013
TEL: 212.530.9300 FAX: 212.269.5894

Retail Interior Design & Planning
Elkus-Manfredi
300 A Street
Boston, MA 02210
TEL: 617.426.1300

No.	Description	Date
1	D.O.B AMENDMENT #2	10/15/2016

Key Plan

09 06 03
08 05 02
07 04 01

Issue Date 10/15/2016
Project No. N11328.00
Drawn By
Sheet Number

HYE-TA-S6-7002
Drawing Title

STOREFRONT STRUCTURE SECTIONS AND DETAILS

Drawing Number
S6-7002
Action Drawing Number
S-611.00

© 2013 KOHN PEDERSEN FOX ASSOCIATES P.C. All rights reserved

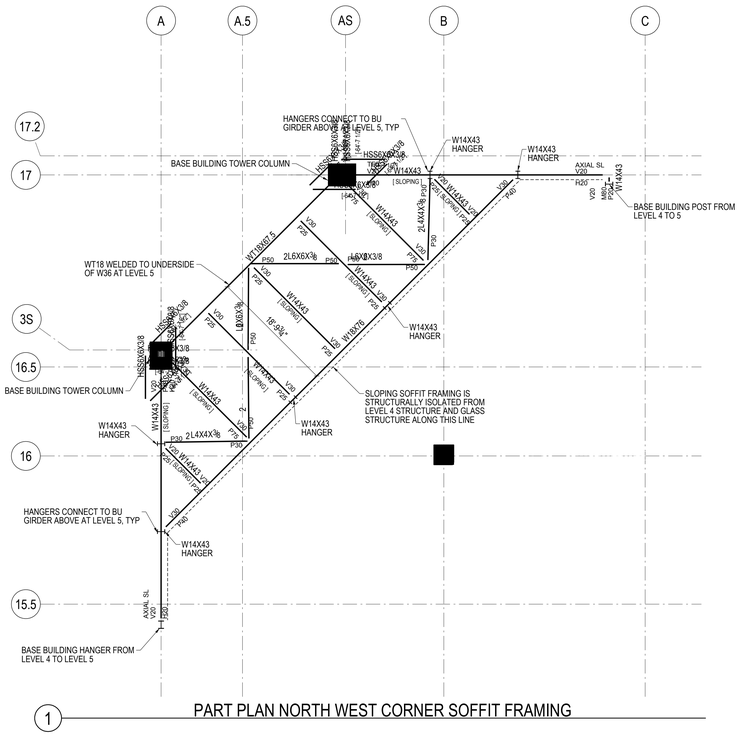

1 PART PLAN NORTH WEST CORNER SOFFIT FRAMING

HUDSON YARDS - RETAIL PODIUM AND TOWER A

500 WEST 33RD STREET
New York, NY

Client
Related Companies
60 Columbus Circle
New York, NY 10023
TEL: 212.801.1000 FAX: 212.801.1048

Oxford Properties Group
320 Park Avenue, 17th Floor
New York, NY 10022
TEL: 212.986.7514 FAX: 212.986.7510

Architect
Kohn Pedersen Fox Associates
11 West 42nd Street
New York, New York 10036
TEL: 212.977.6500 FAX: 212.956.2526

Structural Engineer
Thornton Tomasetti, Inc.
51 Madison Avenue
New York, New York 10010
TEL: 917.661.7800 FAX: 718.661.7801

Mechanical, Electrical, Plumbing, Fire Protection
Jaros Baum & Bolles Consulting Engineers
80 Pine Street
New York, NY 10013
TEL: 212.530.9300 FAX: 212.269.5894

Retail Interior Design & Planning
Elkus-Manfredi
300 A Street
Boston, MA 02210
TEL: 617.426.1300

No	Description	Date
1	D.O.B AMENDMENT #2	10/15/2016

Key Plan

09 06 03
08 05 02
07 04 01

Issue Date 10/15/2016
Project No. N11328.00
Drawn By
Sheet Number

HYE-TA-S6-7003
Drawing Title

Damian Titus
Buildings
APPROVED
Under Directive 2 of 1975
MUNICIPAL REGULATION
Date: 05/03/2017
NYC Development Hub

NW CORNER FRAMING PLAN

Drawing Number
S6-7003
Kohn Drawing Number
S-612.00

0 4' 8' 16'

© 2013 Kohn Pedersen Fox Associates P.C. All rights reserved

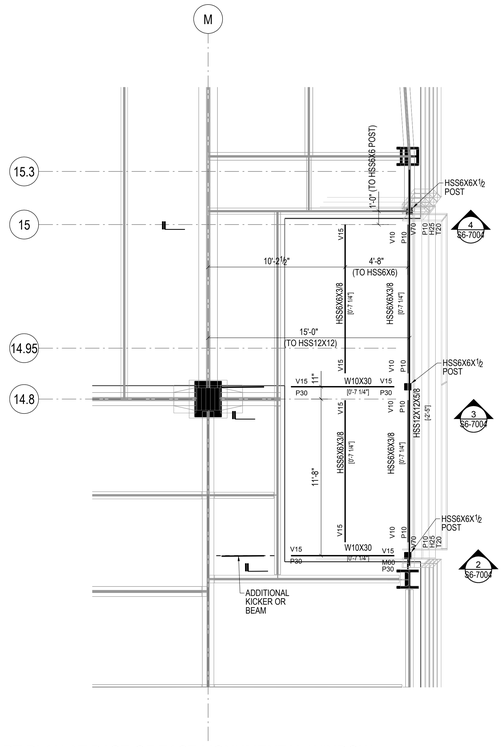

1 PART PLAN AT BASE OF EAST MONUMENTAL WINDOW
1:48

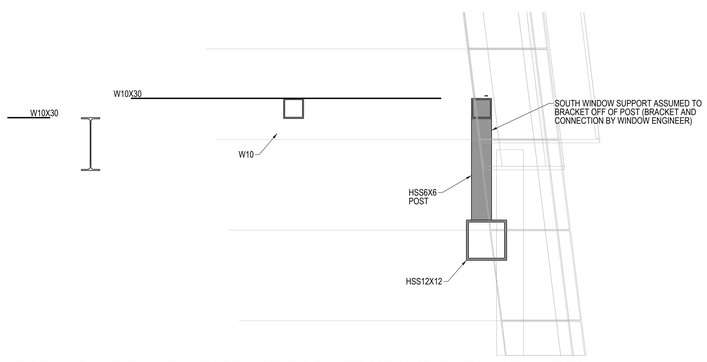

2 SECTION AT SOUTH SUPPORT OF EAST MONUMENTAL WINDOW
1:16

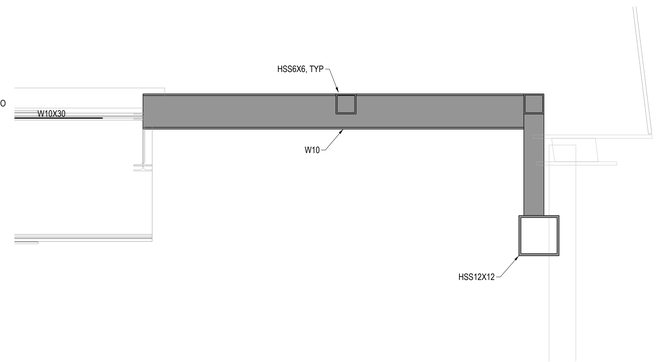

3 SECTION AT BASE OF EAST MONUMENTAL WINDOW
1:16

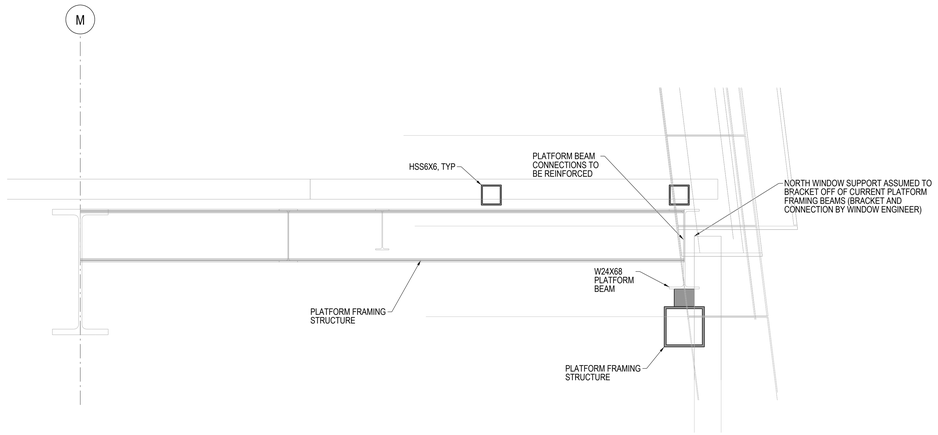

4 SECTION AT NORTH SUPPORT OF EAST MONUMENTAL WINDOW
1:16

HUDSON YARDS - RETAIL PODIUM AND TOWER A

500 WEST 33RD STREET
New York, NY

Client
Related Companies
60 Columbus Circle
New York, NY 10023
TEL: 212.801.1000 FAX: 212.801.1048

Oxford Properties Group
320 Park Avenue, 17th Floor
New York, NY 10022
TEL: 212.986.7514 FAX: 212.986.7510

Architect
Kohn Pedersen Fox Associates
11 West 42nd Street
New York, New York 10036
TEL: 212.977.6500 FAX: 212.956.2526

Structural Engineer
Thornton Tomasetti, Inc.
51 Madison Avenue
New York, New York 10010
TEL: 917.661.7800 FAX: 718.661.7801

Mechanical, Electrical, Plumbing, Fire Protection
Jaros Baum & Bolles Consulting Engineers
80 Pine Street
New York, NY 10013
TEL: 212.530.9300 FAX: 212.269.5894

Retail Interior Design & Planning
Elkus-Manfredi
300 A Street
Boston, MA 02210
TEL: 617.426.1300

No.	Description	Date
1	D.O.B AMENDMENT #2	10/15/2016

Key Plan

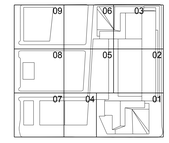

Issue Date 10/15/2016
Project No. N11328.00
Drawn By:
Sheet Number

HYE-TA-S6-7004
Drawing Title

EAST MONUMENTAL WINDOW SECTIONS AND DETAILS

Drawing Number
S6-7004
B-Scan Drawing Number

S-613.00

SHEET 389 OF 443

Damian Titus
Buildings
APPROVED
Under Directive 2 of 1975
AMENDED APPLICATION
Date: 05/01/2017
NYC Development Hub

N

0 4' 8' 16'

© 2013 KOHN PEDERSEN FOX ASSOCIATES PC. All rights reserved.

DEPT OF BLDGS 421185253 Job Number
E397520739 Scan Code

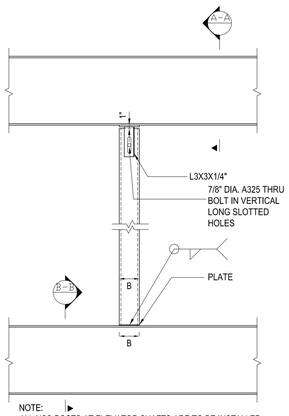

NOTE:
ALL HSS POSTS AT ELEVATOR SHAFTS ARE TO BE INSTALLED AFTER THE CONCRETE SLABS HAVE BEEN POURED ON FLOORS IMMEDIATELY ABOVE AND BELOW POST.

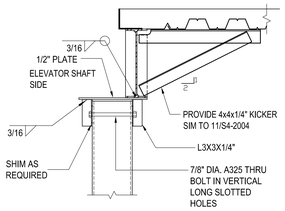

SECTION A-A, CASE 1

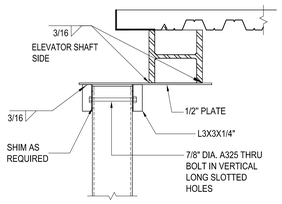

SECTION A-A, CASE 2

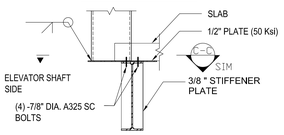

SECTION B-B, CASE 1A POST H<20'-0"

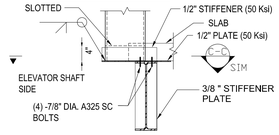

SECTION B-B, CASE 1B POST H≥20'-0"

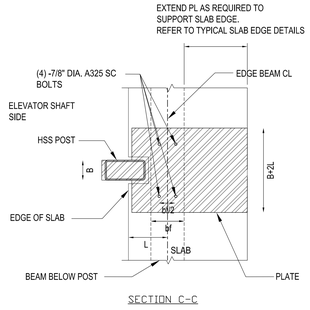

SECTION C-C

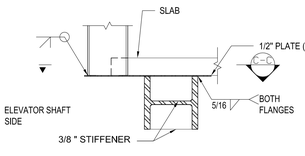

SECTION B-B, CASE 2A POST H<20'-0"

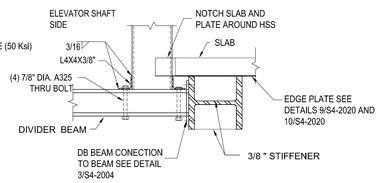

SECTION B-B, CASE 2B POST H>20'-0" AT LOCATIONS WITH DB

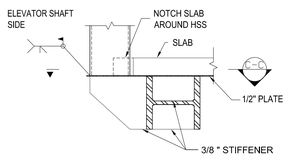

SECTION B-B, CASE 2C POST H>20'-0" AT LOCATIONS WITH NO DB

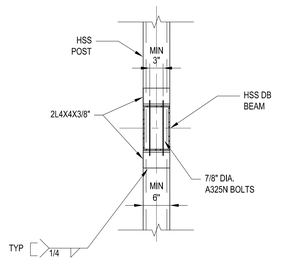

CASE 1, ELEVATION

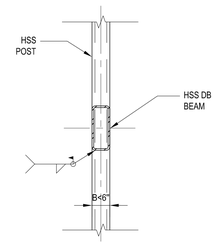

CASE 2, ELEVATION

CENTER PL/
ON MEMBEF

1 TYPICAL ELEVATOR SUPPORT POST DETAIL
SCALE: 3/4" = 1'-0"

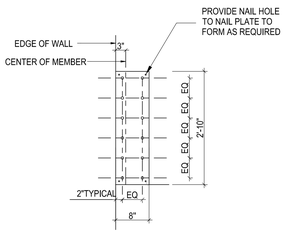

WALL LENGHT <16" EDGE OF EMBED PLATE ELEVATION

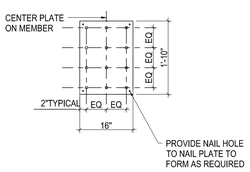

TYPICAL EMBED PLATE ELEVATION

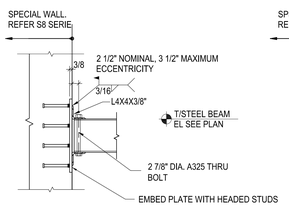

SECTION, CASE 1, DB WIDTH ≥6"

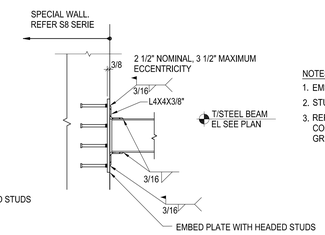

SECTION, CASE 2, DB WIDTH <6"

NOTES:
1. EMBED PLATES SHALL CONFORM TO ASTM A572, Fy=50 ksi
2. STUDS SHALL BE 3/4" DIAMETER x 5" LONG NOMINAL (MINIMUM)
3. REPORT ANY AS-BUILT DEVIATION FROM THE ASSUMED CONDITION TO THE SER AS FOLLOWS:HORIZONTAL DEVIATION GREATER THAN 2" VERTICAL DEVIATION GREATER THAN 1"

3 TYPICAL DIVIDER BEAM WITH EMBED PLATE CONNECTION
SCALE: 3/4" = 1'-0"

2 TYPICAL DIVIDER BEAM CONNECTION TO HSS POST
SCALE: 1/1" = 1'-0"

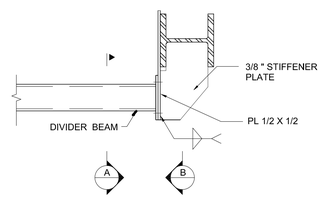

4 TYPICAL DIVIDER BEAM DETAIL AT TOP BEAM
SCALE: 3/4" = 1'-0"

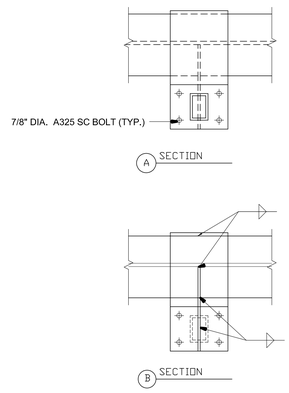

5 TYPICAL DIVIDER CONN. DETAILS
SCALE: 3/4" = 1'-0"

HUDSON YARDS - RETAIL PODIUM AND TOWER A
500 WEST 33RD STREET
New York, NY

Client
Related Companies
60 Columbus Circle
New York, NY 10023
TEL: 212.801.1000 FAX: 212.801.1048

Oxford Properties Group
320 Park Avenue, 17th Floor
New York, NY 10022
TEL: 212.986.7514 FAX: 212.986.7510

Architect
Kohn Pedersen Fox Associates
11 West 42nd Street
New York, New York 10036
TEL: 212.977.6500 FAX: 212.956.2526

Structural Engineer
Thornton Tomasetti, Inc.
51 Madison Avenue
New York, New York 10010
TEL: 917.661.7800 FAX: 718.661.7801

Mechanical, Electrical, Plumbing, Fire Protection
Jaros Baum & Bolles Consulting Engineers
80 Pine Street
New York, NY 10013
TEL: 212.530.9300 FAX: 212.269.5894

Retail Interior Design & Planning
Elkus-Manfredi
300 A Street
Boston, MA 02210
TEL: 617.426.1300

No.	Description	Date
1	D.O.B. AMENDMENT #2	10/15/2016

Key Plan

Issue Date: 10/15/2016
Project No. N11328.00
Drawn By Author
Sheet Number

STATE OF NEW YORK — DAMIAN TITUS — 030 — LICENSED PROFESSIONAL ENGINEER

Damian Titus
Buildings
APPROVED
Under Directive 2 of 1975
AMENDED APPLICATION
Date: 05/03/2017
NYC Development Hub

Drawing Title
TYPICAL STEEL DETAILS V

Drawing Number
S4-2005
B-Scan Drawing Number
S-624.00 SHEET 337 OF 443

© 2013 KOHN PEDERSEN FOX ASSOCIATES PC. All rights reserved.

DEPT OF BLDGS 421365251 Job Number
B3N2503000R Scan Code

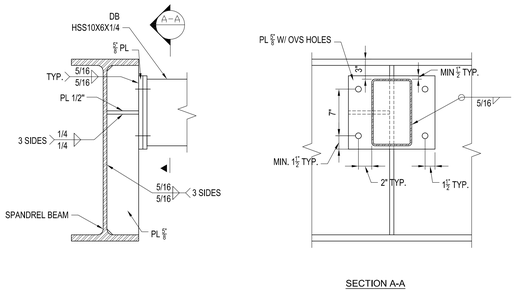

SECTION A-A

1 DB CONNECTION TO VERTICAL WEB SPANDREL BEAM
SCALE: 1-1/2" = 1'-0"

NOTES:
1. 7/8" DIA A325 SC BOLTS

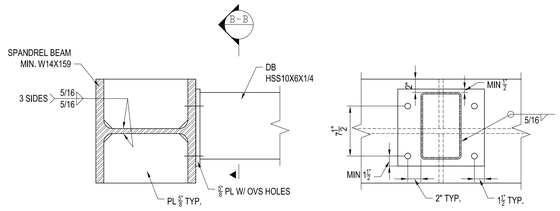

SECTION B-B

2 DB CONNECTION TO HORIZONTAL WEB SPANDREL BEAM
SCALE: 1-1/2" = 1'-0"

NOTES:
1. 7/8" DIA A325 SC BOLTS

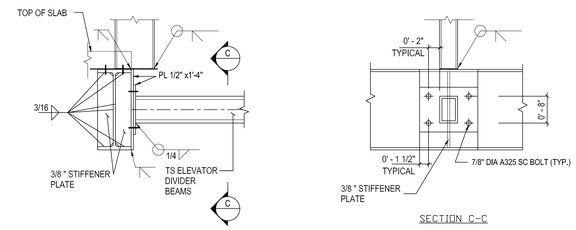

SECTION C-C

3 DB CONNECTION TO BEAM AT POST LOCATION
SCALE: 1" = 1'-0"

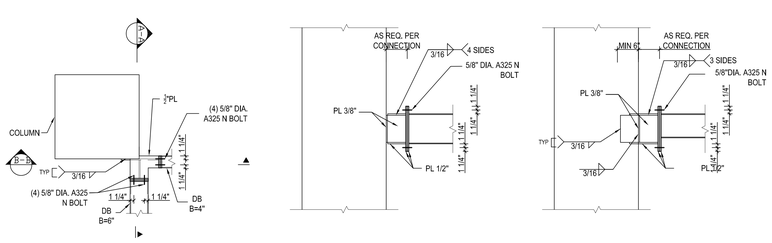

PLAN SECTION A-A SECTION B-B

1 TYPICAL DB CONNECTION TO COLUMN
SCALE: 3/4" = 1'-0"

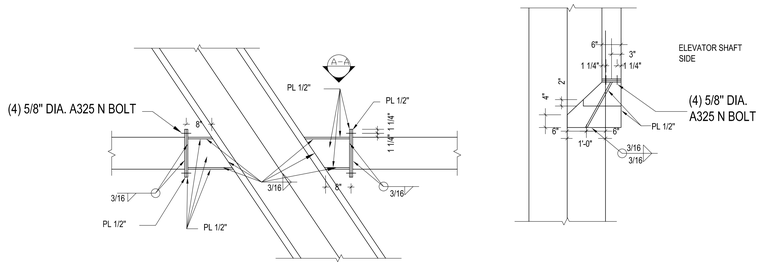

ELEVATION VIEW A-A

1 DIVIDER BEAM TO BRACE CONNECTION DETAIL

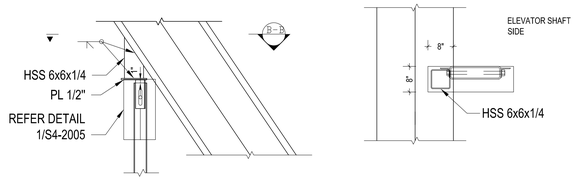

ELEVATION SECTION B-B

2 POST TO BRACE CONNECTION DETAIL

HUDSON YARDS - RETAIL PODIUM AND TOWER A

500 WEST 33RD STREET
New York, NY

Client
Related Companies
60 Columbus Circle
New York, NY 10023
TEL: 212.801.1000 FAX: 212.801.1048

Oxford Properties Group
320 Park Avenue, 17th Floor
New York, NY 10022
TEL: 212.986.7514 FAX: 212.986.7510

Architect
Kohn Pedersen Fox Associates
11 West 42nd Street
New York, New York 10036
TEL: 212.977.6500 FAX: 212.956.2526

Structural Engineer
Thornton Tomasetti, Inc.
51 Madison Avenue
New York, New York 10010
TEL: 917.661.7800 FAX: 718.661.7801

Mechanical, Electrical, Plumbing, Fire Protection
Jaros Baum & Bolles Consulting Engineers
80 Pine Street
New York, NY 10013
TEL: 212.530.9300 FAX: 212.269.5894

Retail Interior Design & Planning
Elkus-Manfredi
300 A Street
Boston, MA 02210
TEL: 617.426.1300

No.	Description	Date
1	D.O.B. AMENDMENT #2	10/15/2016

Key Plan

Issue Date: 10/15/2016
Project No. N11328.00
Drawn By Author
Sheet Number

Damian Titus
Buildings
APPROVED
Under Directive 2 of 1975
AMENDED APPLICATION
Date: 05/03/2017
NYC Development Hub

Drawing Title
TYPICAL STEEL DETAILS VI

Drawing Number
S4-2006
B-Scan Drawing Number
S-625.00

CAT 02 BLOCK 2711 LOT 1 ... Job Number ... Shell Date

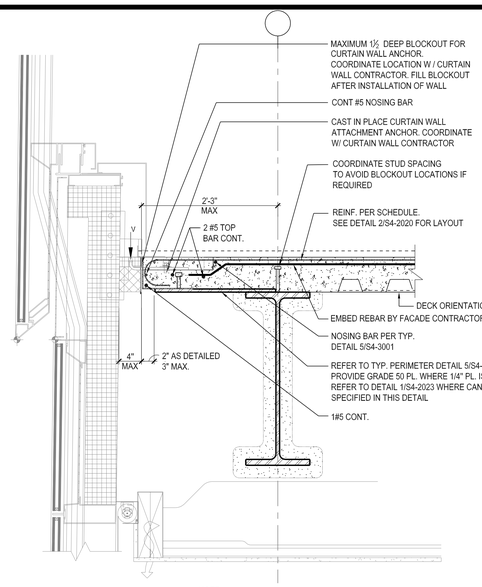

REINFORCEMENT SCHEDULE

TOTAL SLAB THICKNESS (IN)	CANTILEVER SPAN 'L'	CANTILEVER REINFORCEMENT (SEE NOTES)
UP TO 7 1/2" (3 1/2" MIN CONCRETE THICKNESS OVER DECK)	1'-0" < L ≤ 2'-3"	#4@6"
	6" < L ≤ 1'-0"	#4@10"
	≤ 6"	-
OVER 7 1/2" UP TO 11" (4 1/2" MIN CONCRETE THICKNESS OVER DECK)	6" < L ≤ 2'-3"	#4@10"
	≤ 6"	-

SCHEDULE NOTES:

1. REFER TO 1/S4-2023 FOR SLAB EDGE DIMENSION EXCEDING 2'-3"
2. POUR STOP TO BE DESIGNED AND PROVIDED BY STEEL DECK CONTRACTOR (14 GAGE MINIMUM)
3. CANTILEVER REINFORCEMENT IS IN ADDITION TO ANY REINFORCEMENT SHOWN IN NOTES, ON PLAN OR ON SLAB SCHEDULES EXCEPT FOR REINFORCEMENT IN 5/S4-3001. THIS SCHEDULE OVERRIDES BARS IN 5/S4-3001.

NOTE:

1) BARS TO BEND AND SKEW TO AVOID CLASHES WITH STEEL OR OTHER REINFORCEMENT, SEE 1/S4-3005 FOR APPLICABLE NOTES AND DETAIL CRITERIA.
2) SEE DETAILS 3/S-4-2020 AND 1&2/SS4-3005 FOR DETAILS AT CORNER AND ADJACENT EMBEDS
3) SEE PLAN FOR DECK DIRECTION

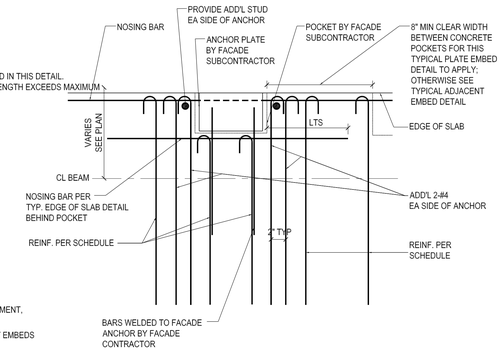

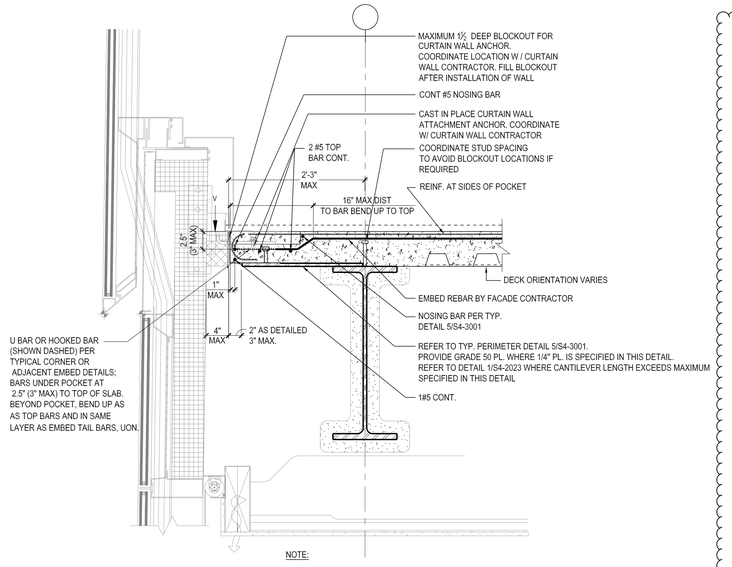

NOTE:

1) SEE DETAILS 1&2/S4-3005 FOR PLAN DETAILS AT CORNER AND ADJACENT EMBEDS
2) SEE DETAIL 1&2/S-4-2020 FOR INFORMATION NOT SHOWN.
3) SEE PLAN FOR DECK DIRECTION
4) PREVIOUS DETAIL 3/S4-2020 CONSOLIDATED INTO 1/S4-2020. NO CHANGE TO DETAILS.

1 TYPICAL FACADE ATTACHMENT DETAIL
SCALE: 1 1/2" = 1'-0"

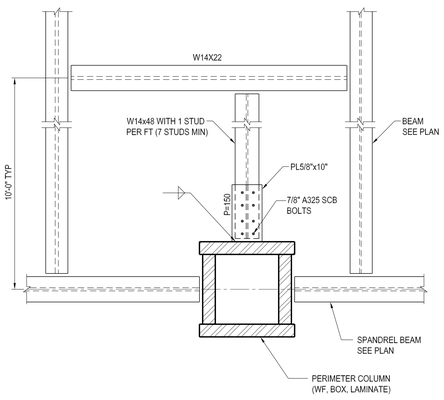

NOTE : AT CONTRACTOR'S OPTION, DETAIL 5A MAY BE USED IN LIEU OF DETAIL 5 AT ALL LOCATION

4A TYPICAL PERIMETER COLUMN BRACING DETAIL WHERE FRAMING NOT ALIGNED WITH COLUMN AT PIPE RISER
SCALE: 3/4" = 1'-0"

2 PLAN LAYOUT AT TYPICAL FACADE ATTACHMENTS TO SLAB
SCALE: 1" = 1'-0"

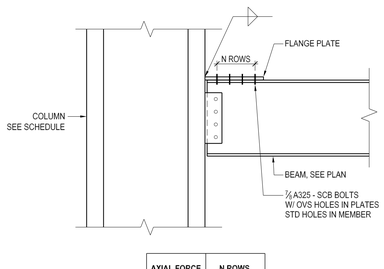

AXIAL FORCE (KIPS)	N ROWS
75-100	3
101-150	4
151-175	5
176-225	6
226-250	7
251-300	8

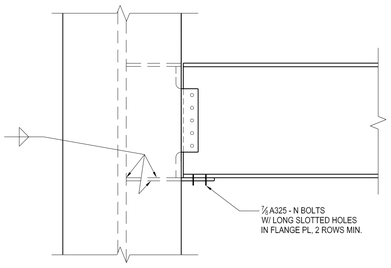

6 TYPICAL BOTTOM FLANGE CONNECTION AT SPANDREL BEAMS
SCALE: 1" = 1'-0"

3 TYPICAL FACADE ATTACHMENT DETAIL AT CORNER EMBEDS OR ADJACENT EMBEDS
SCALE: 1 1/2" = 1'-0"

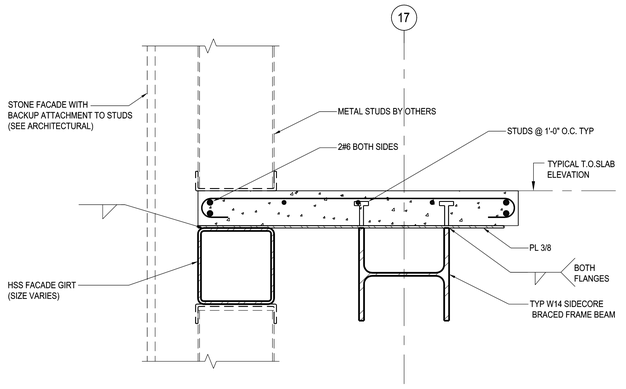

NOTE : SEE TYP EDGE OF SLAB DETAILS FOR INFORMATION NOT SHOWN

7 TYP STONE FACADE SUPPORT ALONG GRID 17 AT LOCATION WITH SLAB
SCALE: 1 1/2" = 1'-0"

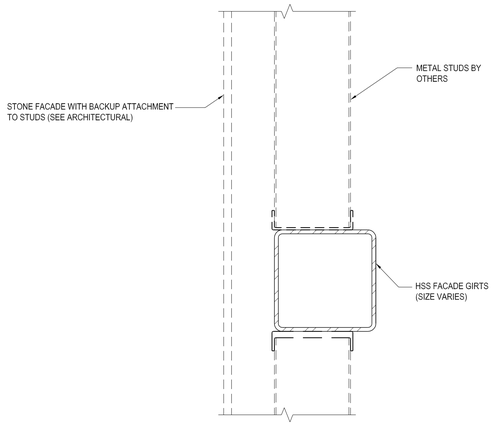

8 TYP STONE FACADE SUPPORT AT LOCATION WITHOUT SLAB
SCALE: 1 1/2" = 1'-0"

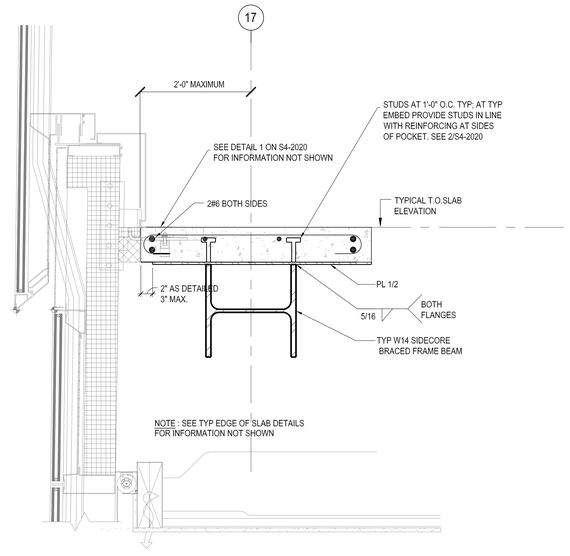

5 TYPICAL TOP FLANGE AXIAL CONNECTION
SCALE: 1" = 1'-0"

9 TYP GLASS FACADE SUPPORT BEHIND SHAFTS ALONG GRID 17 AT LOCATIONS WITH SLAB EDGE DISTANCE LESS THAN OR EQUAL TO 2'-0"
SCALE: 1 1/2" = 1'-0"

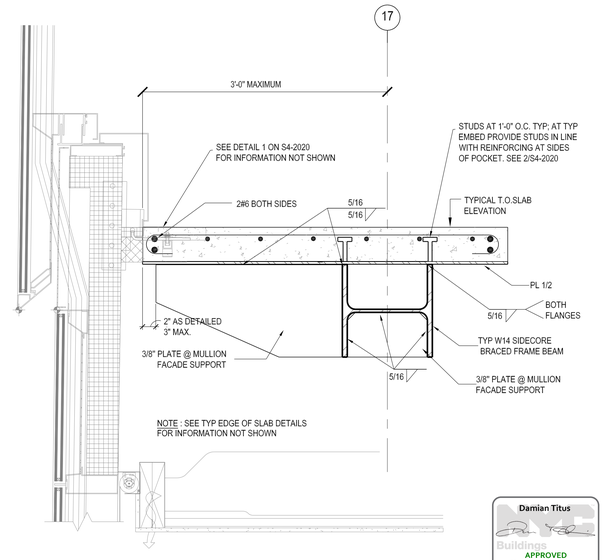

10 TYP GLASS FACADE SUPPORT ALONG GRID 17 AT LOCATIONS WITH SLAB EDGE DISTANCE BETWEEN 2'-0" TO 3'-0"
SCALE: 1 1/2" = 1'-0"

Damian Titus
Buildings
APPROVED
Under Directive 2 of 1975
AMENDED APPLICATION
Date: 05/03/2017
NYC Development Hub

HUDSON YARDS - RETAIL PODIUM AND TOWER A

500 WEST 33RD STREET
New York, NY

Client
Related Companies
60 Columbus Circle
New York, NY 10023
TEL: 212.801.1000 FAX: 212.801.1048

Oxford Properties Group
320 Park Avenue, 17th Floor
New York, NY 10022
TEL: 212.986.7514 FAX: 212.986.7510

Architect
Kohn Pedersen Fox Associates
11 West 42nd Street
New York, New York 10036
TEL: 212.977.6500 FAX: 212.956.2526

Structural Engineer
Thornton Tomasetti, Inc.
51 Madison Avenue
New York, New York 10010
TEL: 917.661.7800 FAX: 718.661.7801

Mechanical, Electrical, Plumbing, Fire Protection
Jaros Baum & Bolles Consulting Engineers
80 Pine Street
New York, NY 10013
TEL: 212.530.9300 FAX: 212.269.5894

Retail Interior Design & Planning
Elkus-Manfredi
300 A Street
Boston, MA 02210
TEL: 617.426.1300

No.	Description	Date
2	D.O.B AMENDMENT #2	10/15/2016
1	D.O.B BUILDING PERMIT FILING	12/10/2014

Key Plan

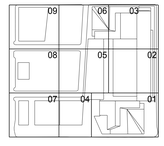

Issue Date 12/10/2014
Project No. N11328.00
Drawn By
Sheet Number

HYE-TA-S4-2020
Drawing Title

TOWER A
TYP. PERIMETER BEAM DETAILS

Drawing Number
S4-2020
B-Scan Drawing Number
S-640.01

© 2013 KOHN PEDERSEN FOX ASSOCIATES PC. All rights reserved.

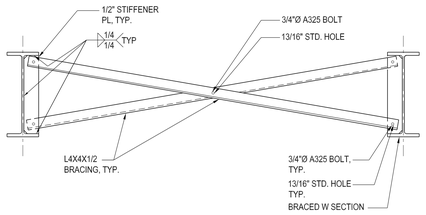

1 TYPICAL BEAM BRACING DETAIL
SCALE: 3/4" = 1'-0"

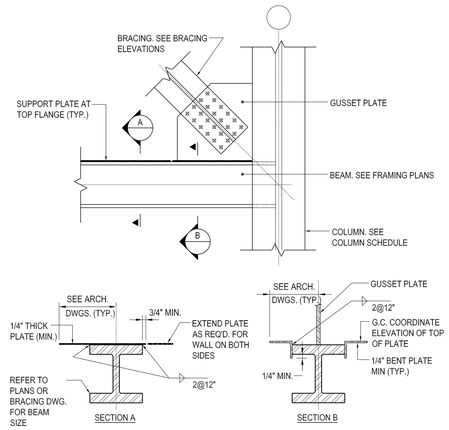

2 TYPICAL ELEVATOR SHAFT DRYWALL SUPPORT PLATE DETAILS

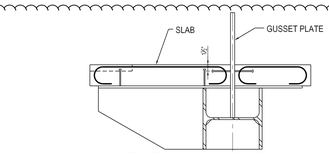

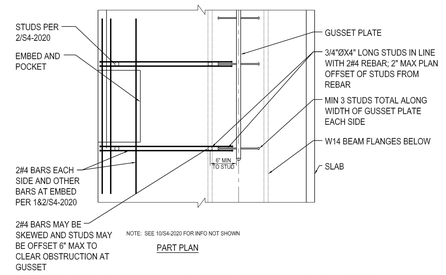

3 TYPICAL GRIDLINE 17 GUSSET AND EMBED
SCALE: 1 " = 1'-0"

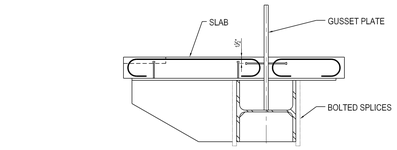

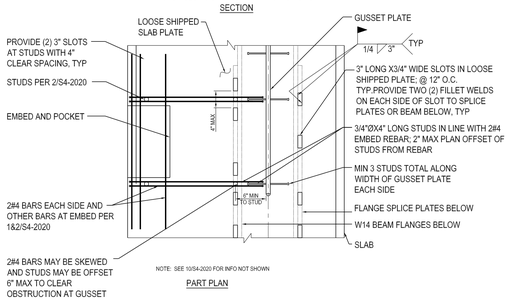

4 TYPICAL GRIDLINE 17 GUSSET AND EMBED AT LOOSE SPLICE PLATE
SCALE: 1 " = 1'-0"

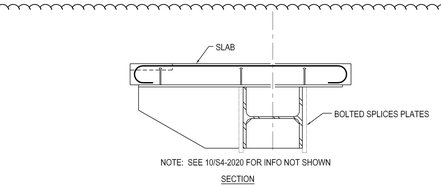

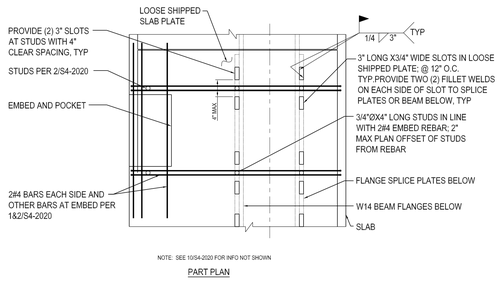

5 TYPICAL GRIDLINE 17 LOOSE SPLICE PLATE AND EMBED
SCALE: 1 " = 1'-0"

Damian Titus
Buildings
APPROVED
Under Directive 2 of 1975
AMENDED/CORRELATION
Date: 05/03/2017
NYC Development Hub

HUDSON YARDS - RETAIL PODIUM AND TOWER A
500 WEST 33RD STREET
New York, NY

Client
Related Companies
60 Columbus Circle
New York, NY 10023
TEL: 212.801.1000 FAX: 212.801.1048

Oxford Properties Group
320 Park Avenue, 17th Floor
New York, NY 10022
TEL: 212.986.7514 FAX: 212.986.7510

Architect
Kohn Pedersen Fox Associates
11 West 42nd Street
New York, New York 10036
TEL: 212.977.6500 FAX: 212.956.2526

Structural Engineer
Thornton Tomasetti, Inc.
51 Madison Avenue
New York, New York 10010
TEL: 917.661.7800 FAX: 718.661.7801

Mechanical, Electrical, Plumbing, Fire Protection
Jaros Baum & Bolles Consulting Engineers
80 Pine Street
New York, NY 10013
TEL: 212.530.9300 FAX: 212.269.5894

Retail Interior Design & Planning
Elkus-Manfredi
300 A Street
Boston, MA 02210
TEL: 617.426.1300

No.	Description	Date
2	D.O.B AMENDMENT #2	10/15/2016
1	D.O.B BUILDING PERMIT FILING	12/10/2014

Key Plan

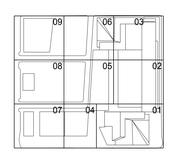

Issue Date 12/10/2014
Project No. N11328.00
Drawn By
Sheet Number

HYE-TA-S4-2021
Drawing Title

TOWER A
TYP. BEAM DETAILS

Drawing Number
S4-2021
Kohn Drawing Number
S-641.01

© 2013 KOHN PEDERSEN FOX ASSOCIATES PC. All rights reserved.

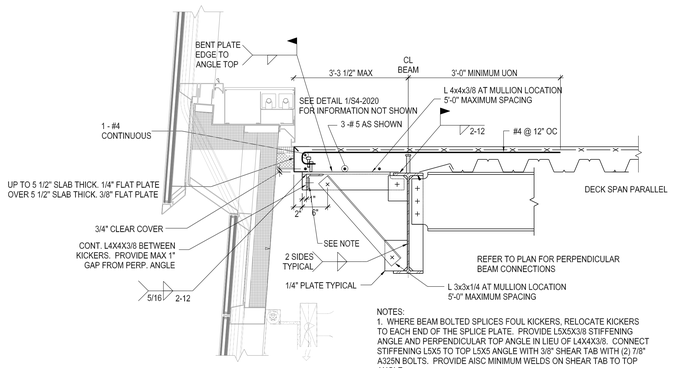

1 TYPICAL FACADE ATTACHMENT DETAIL AT EDGE OF SLAB DIMENSIONS BETWEEN 2'-3" AND 3'-3 1/2"
1"=1'-0"

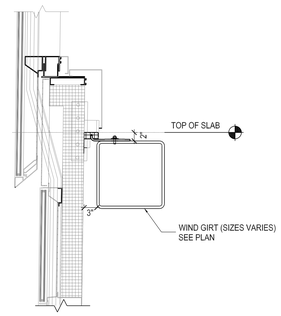

2 TYPICAL FACADE CONNECTION TO WIND GIRT
1"=1'-0"

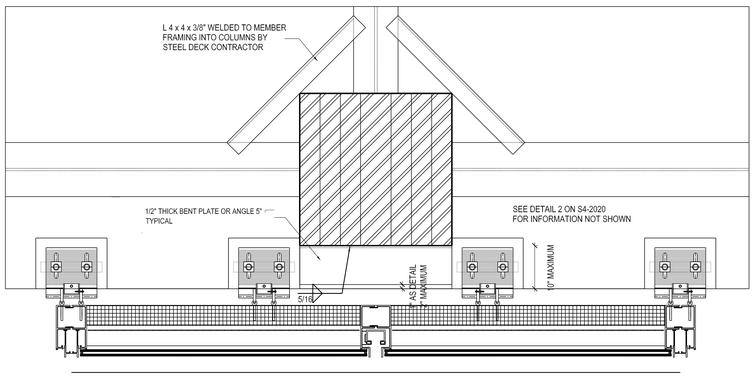

3 TYPICAL FACADE CONNECTION AT MULLION ALIGNED WITH COLUMN. CANTILEVER < 10 1/2"
1"=1'-0"

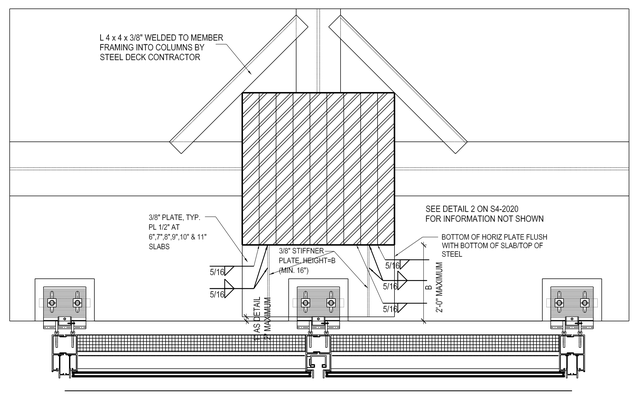

4 TYPICAL FACADE CONNECTION AT MULLION ALIGNED WITH COLUMN. CANTILEVER OVER 10 1/2" TO 2'-0"
1"=1'-0"

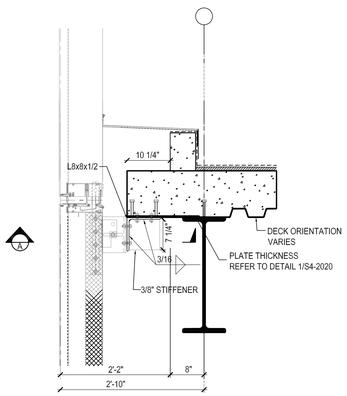

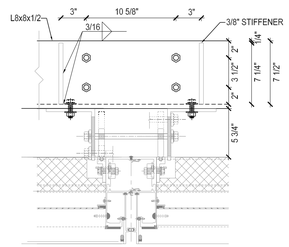

SECTION A-A
SCALE: 2" = 1'-0"

6 FACADE ATTACHMENT DETAIL AT LEVELS 65 AND 66
1"=1'-0"

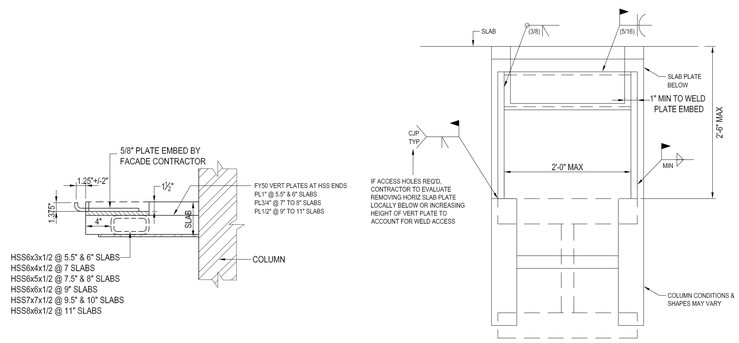

SECTION **PART PLAN**

NOTES:
1) ASSEMBLY MAY BE OFF CENTER OF COLUMN AND EMBED MAY BE OFF CENTER OF HSS.
2) VERT PLATES AND HSS NOT TO EXTEND BEYOND THE SIDE FACE OF COLUMN, UON.
3) AT CONTINUOUS EMBEDS GREATER THAN 2'-0 WIDTH AND AROUND CORNERS, DETAIL MAY BE EXTENDED WITH ADJACENT ADDITIONAL WELDED HSS AND VERT PLATES, CREATING A COMPOUND ASSEMBLY.
4) PORTIONS OF PLATE EMBED EXTENDING BEYOND SIDE FACE OF COLUMN & ASSEMBLY ARE ASSUMED TO BE SUPPORTED BY CONCRETE SLAB, UON

7 TYPICAL BUILT UP STEEL FACADE EMBED SUPPORT WITHIN SLAB (ALTERNATE WITH NO STEEL BELOW SLAB)
SCALE: 1 1/2" = 1'-0"

Damian Titus
Buildings
APPROVED
Under Directive 2 of 1975
AMENDED APPLICATION
Date: 05/03/2017
NYC Development Hub

HUDSON YARDS - RETAIL PODIUM AND TOWER A

500 WEST 33RD STREET
New York, NY

Client
Related Companies
60 Columbus Circle
New York, NY 10023
TEL: 212.801.1000 FAX: 212.801.1048

Oxford Properties Group
320 Park Avenue, 17th Floor
New York, NY 10022
TEL: 212.986.7514 FAX: 212.986.7510

Architect
Kohn Pedersen Fox Associates
11 West 42nd Street
New York, New York 10036
TEL: 212.977.6500 FAX: 212.956.2526

Structural Engineer
Thornton Tomasetti, Inc.
51 Madison Avenue
New York, New York 10010
TEL: 917.661.7800 FAX: 718.661.7801

Mechanical, Electrical, Plumbing, Fire Protection
Jaros Baum & Bolles Consulting Engineers
80 Pine Street
New York, NY 10013
TEL: 212.530.9300 FAX: 212.269.5894

Retail Interior Design & Planning
Elkus-Manfredi
300 A Street
Boston, MA 02210
TEL: 617.426.1300

No.	Description	Date
2	D.O.B AMENDMENT #2	10/15/2016
1	D.O.B BUILDING PERMIT FILING	12/10/2014

Key Plan

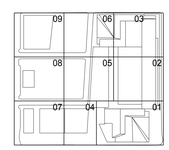

Issue Date 12/10/2014
Project No. N11328.00
Drawn By
Sheet Number

STATE OF NEW YORK — DEPARTMENT OF BUILDINGS — PROFESSIONAL ENGINEER

Drawing Title
HYE-TA-S4-2023

TYPICAL PERIMETER BEAM DETAILS

Drawing Number
S4-2023
B-Scan Drawing Number
S-643.01

© 2013 KOHN PEDERSEN FOX ASSOCIATES PC. All rights reserved.

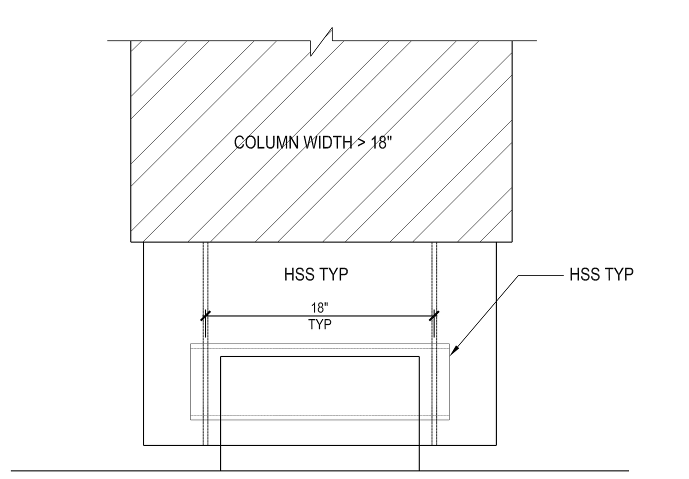

TYPE 1 **EMBED WITHIN STIFFENERS OF COLUMN**
(SEE DETAIL 1 & 1A)

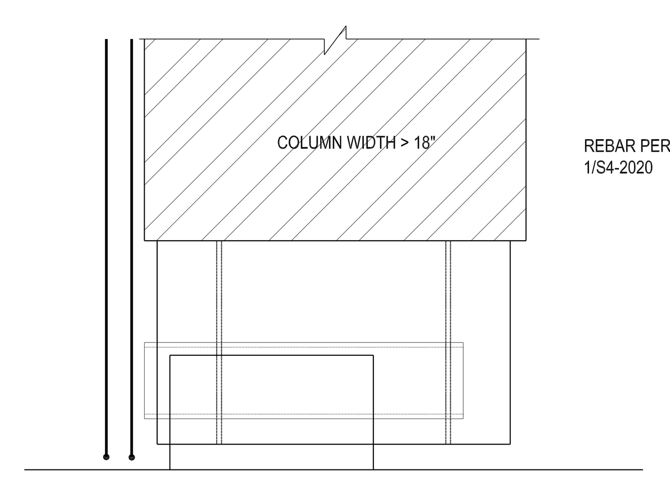

TYPE 2 **EMBED OFFSET, FULLY IN FRONT OF COLUMN**
(SEE DETAIL 2 & 2A)

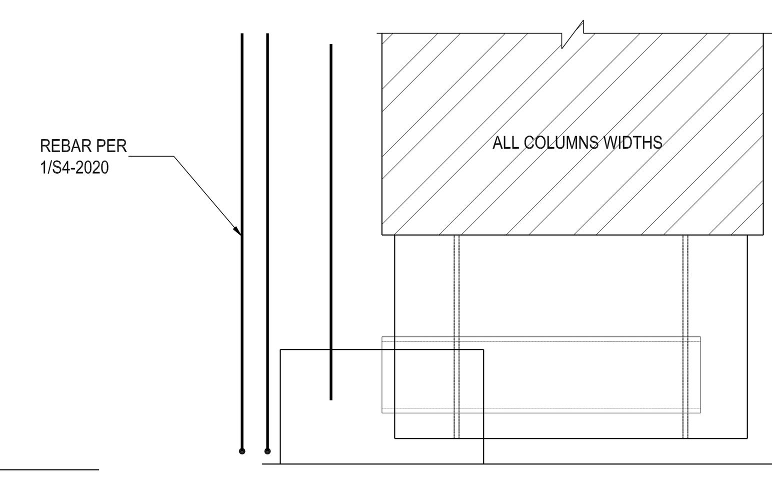

TYPE 3 **EMBED OFFSET, PARTIALLY IN FRONT OF COLUMN**
(SEE DETAIL 3 & 3A)

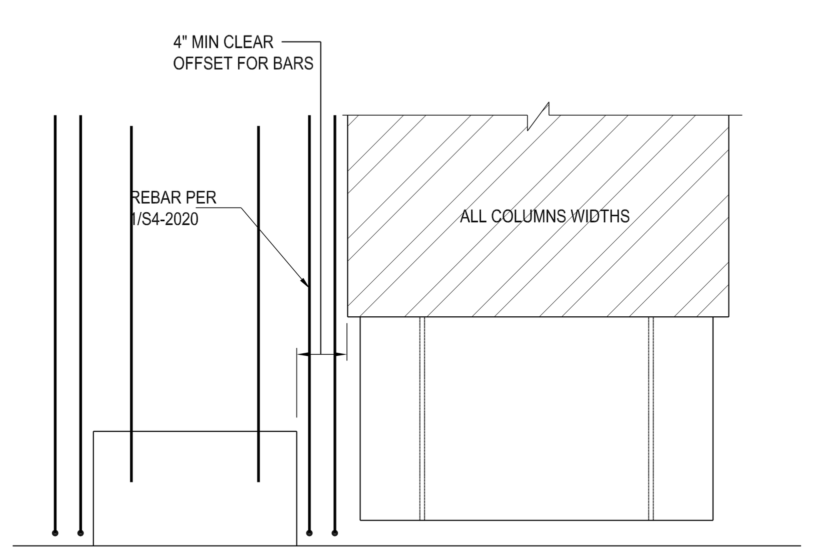

TYPE 4 **EMBED BARS AND STRUCTURAL SLAB BARS CLEAR COLUMN**
(NO HSS BRACKET REQ'D)

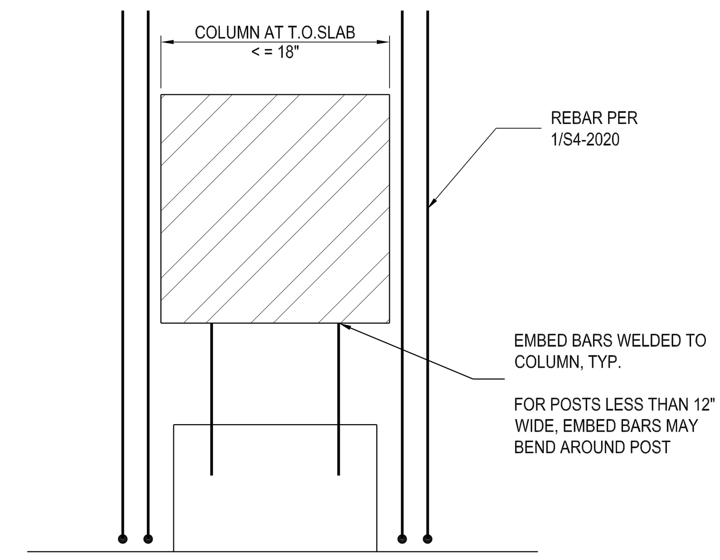

TYPE 5 **EMBED FULLY IN FRONT OF COLUMN WITH 18" WIDTH OR LESS**

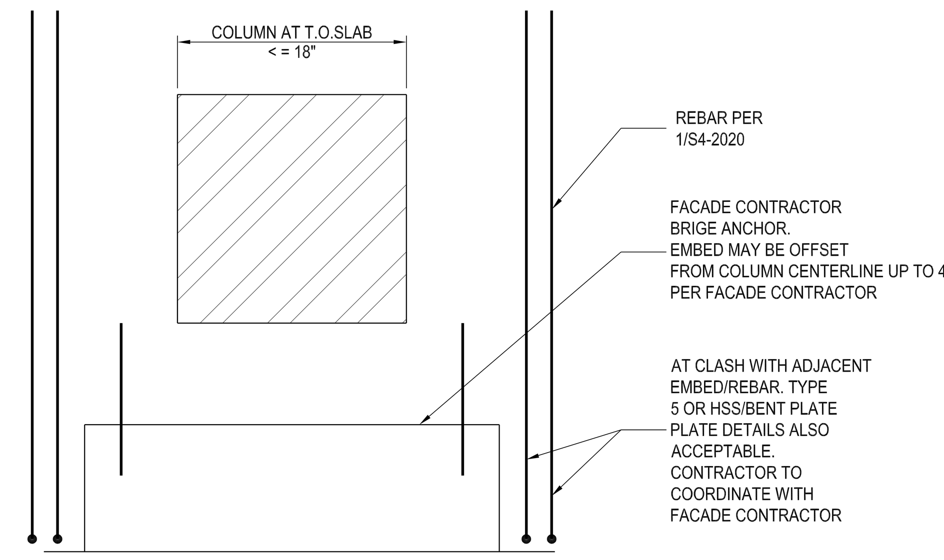

TYPE 5 ALT **ALT BRIDGE EMBED DETAIL AT COLUMN WITH 18" WIDTH OR LESS**

FACADE EMBED CONDITIONS AT COLUMNS

ALTERNATE STEEL BRACKET DETAILS vs WELDING REBAR FROM DET 1&2&3/S4-2020 TO COLUMNS

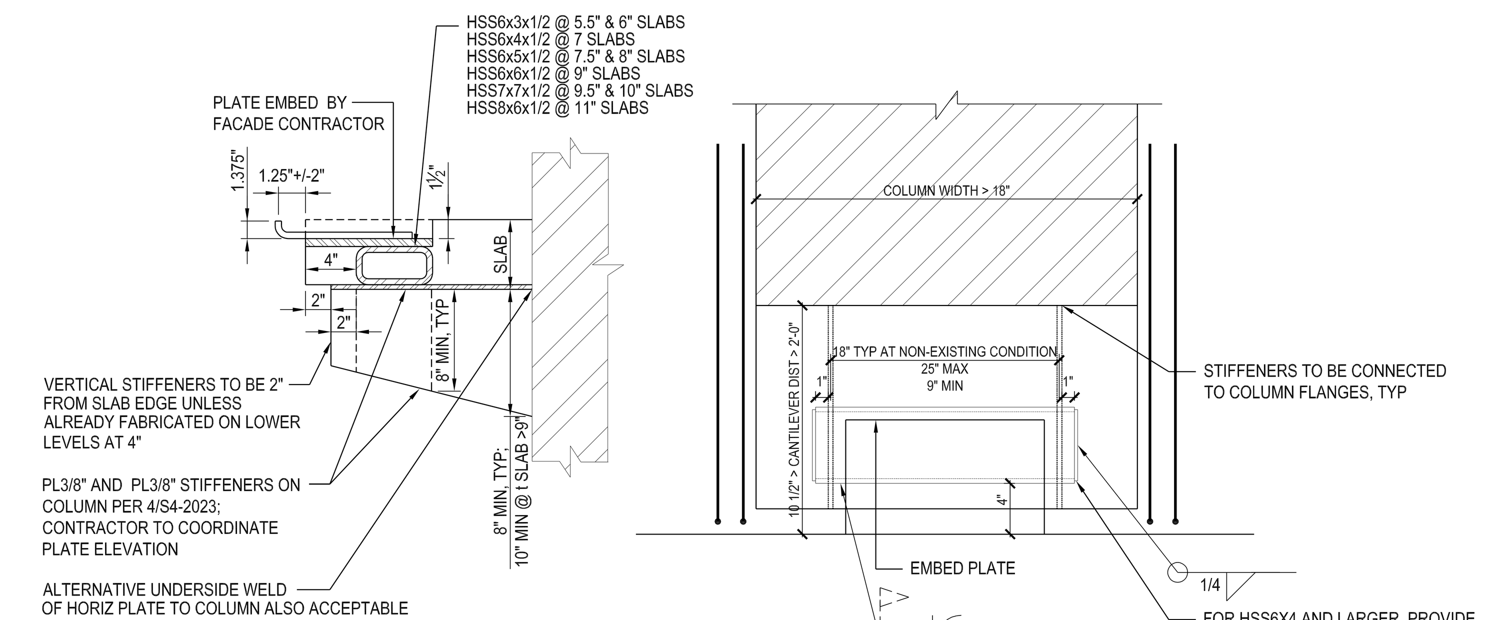

NOTE:
1) SLAB REINFORCEMENT NOT SHOWN FOR CLARITY
2) FOR CANTILEVER DISTANCE 10 1/2" AND UNDER, FACADE CONTRACTOR TO CONNECT EMBED DIRECTLY TO COLUMN
3) FOR CANTILEVER DISTANCE FROM 10 1/2" TO 18", HSS TO BE SHOP INSTALLED OR ALT BENT PLATE DETAIL 1A MAY BE APPLIED

1 **EMBED WITHIN STIFFENERS OF COLUMN**
SCALE: 1 1/2" = 1'-0"

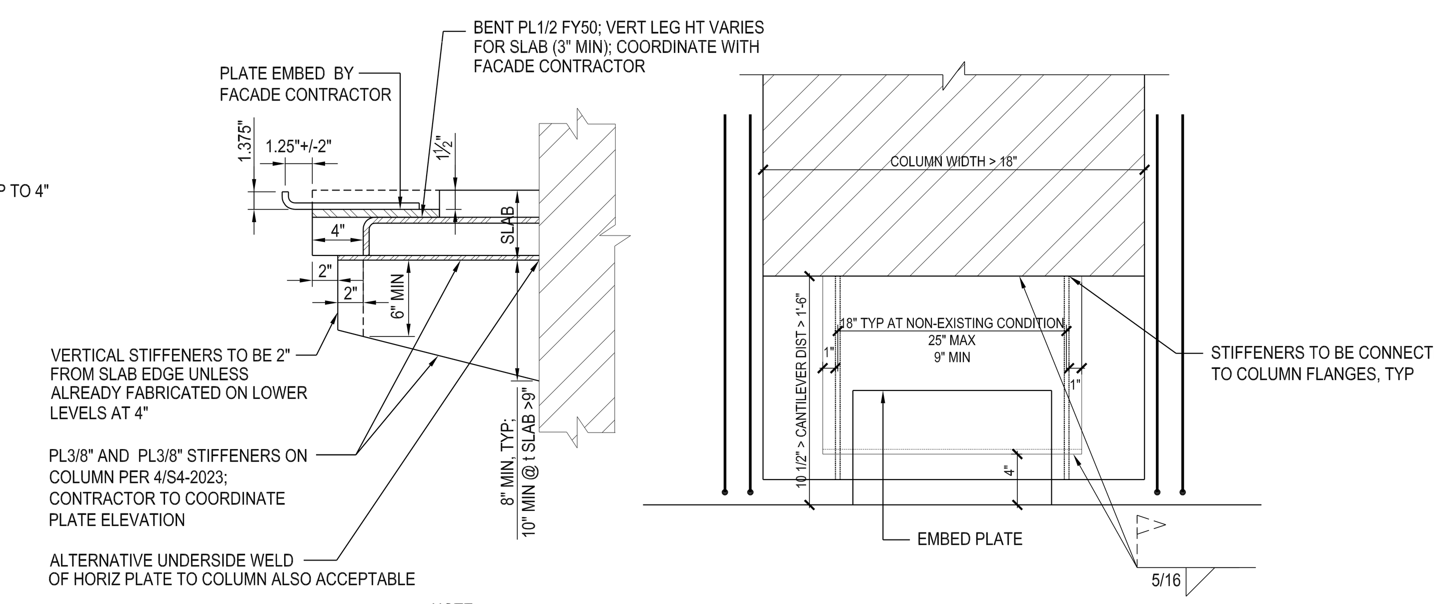

NOTE:
1) SLAB REINFORCEMENT NOT SHOWN FOR CLARITY
2) FOR CANTILEVER DISTANCE 10 1/2" AND UNDER, FACADE CONTRACTOR TO CONNECT EMBED DIRECTLY TO COLUMN

1A **EMBED WITHIN STIFFENERS OF COLUMN ALTERNATE BENT PLATE DETAIL**
SCALE: 1 1/2" = 1'-0"

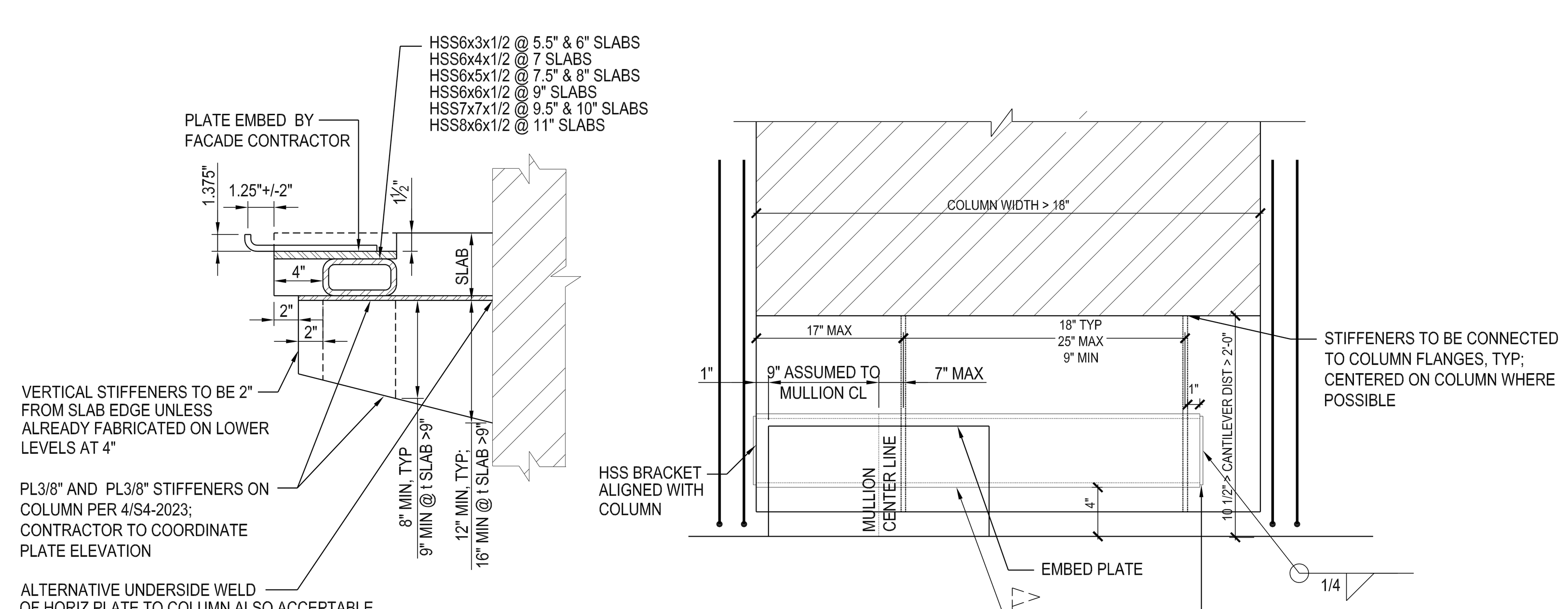

NOTE:
1) SLAB REINFORCEMENT NOT SHOWN FOR CLARITY
2) FOR CANTILEVER DISTANCE 10 1/2" AND UNDER, FACADE CONTRACTOR TO CONNECT EMBED DIRECTLY TO COLUMN
3) FOR CANTILEVER DISTANCE FROM 10 1/2" TO 18", HSS TO BE SHOP INSTALLED OR ALT BENT PLATE DETAIL 2A MAY BE APPLIED

2 **EMBED OFFSET, FULLY IN FRONT OF COLUMN**
SCALE: 1 1/2" = 1'-0"

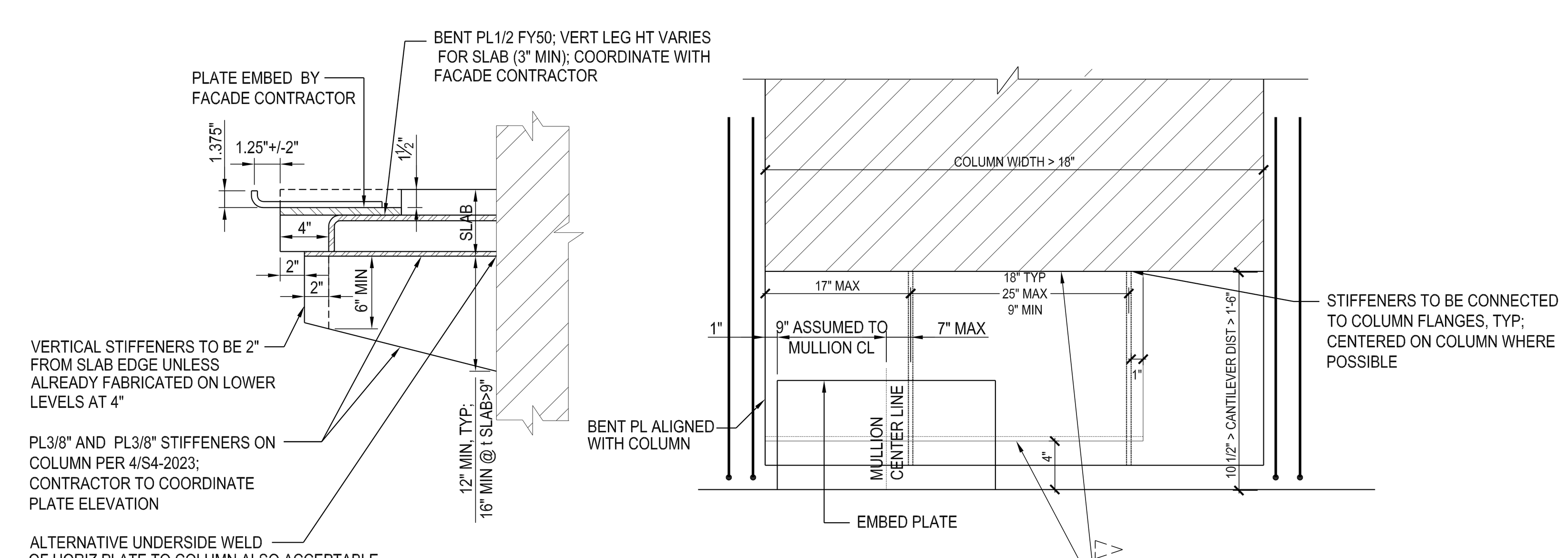

NOTE:
1) SLAB REINFORCEMENT NOT SHOWN FOR CLARITY
2) FOR CANTILEVER DISTANCE 10 1/2" AND UNDER, FACADE CONTRACTOR TO CONNECT EMBED DIRECTLY TO COLUMN

2A **EMBED WITHIN FULLY IN FRONT OF COLUMN ALTERNATE BENT PLATE DETAIL**
SCALE: 1 1/2" = 1'-0"

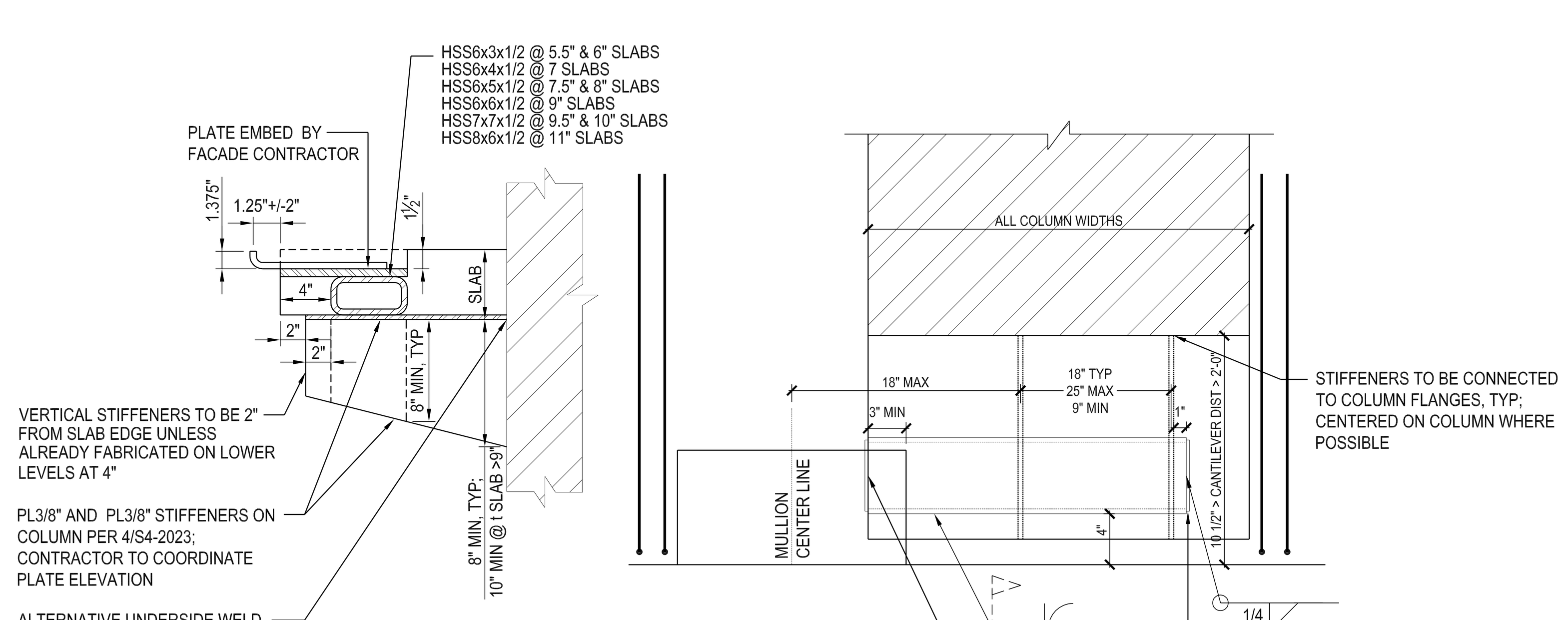

NOTE:
1) SLAB REINFORCEMENT NOT SHOWN FOR CLARITY
2) FOR CANTILEVER DISTANCE 10 1/2" AND UNDER, FACADE CONTRACTOR TO CONNECT EMBED DIRECTLY TO COLUMN
3) FOR CANTILEVER DISTANCE FROM 10 1/2" TO 18", HSS TO BE SHOP INSTALLED OR ALT BENT PLATE DETAIL 3A MAY BE APPLIED

3 **EMBED OFFSET, PARTIALLY IN FRONT OF COLUMN**
SCALE: 1 1/2" = 1'-0"

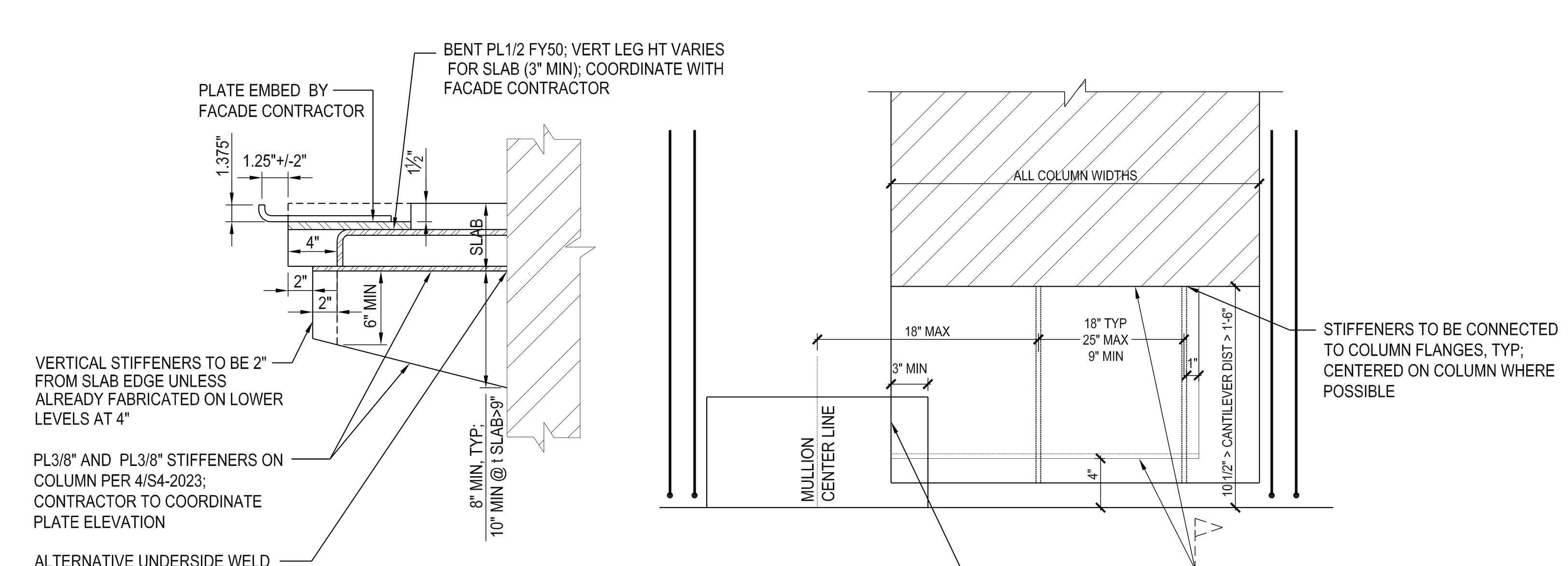

NOTE:
1) SLAB REINFORCEMENT NOT SHOWN FOR CLARITY
2) FOR CANTILEVER DISTANCE 10 1/2" AND UNDER, FACADE CONTRACTOR TO CONNECT EMBED DIRECTLY TO COLUMN

3A **EMBED OFFSET,PARTIALLY IN FRONT OF COLUMN ALTERNATE BENT PLATE DETAIL**
SCALE: 1 1/2" = 1'-0"

DEPT OF BLDGS 121186251 Job Number
ES265190377 Scan Code

HUDSON YARDS - RETAIL PODIUM AND TOWER A
500 WEST 33RD STREET
New York, NY

Client
Related Companies
60 Columbus Circle
New York, NY 10023
TEL: 212.801.1000 FAX: 212.801.1048

Oxford Properties Group
320 Park Avenue, 17th Floor
New York, NY 10022
TEL: 212.986.7514 FAX: 212.986.7510

Architect
Kohn Pedersen Fox Associates
11 West 42nd Street
New York, New York 10036
TEL: 212.977.6500 FAX: 212.956.2526

Structural Engineer
Thornton Tomasetti, Inc.
51 Madison Avenue
New York, New York 10010
TEL: 917.661.7800 FAX: 718.661.7801

Mechanical, Electrical, Plumbing, Fire Protection
Jaros Baum & Bolles Consulting Engineers
80 Pine Street
New York, NY 10013
TEL: 212.530.9300 FAX: 212.269.5894

Retail Interior Design & Planning
Elkus-Manfredi
300 A Street
Boston, MA 02210
TEL: 617.426.1300

No.	Description	Date
1	D.O.B AMENDMENT #2	10/15/2016

Key Plan

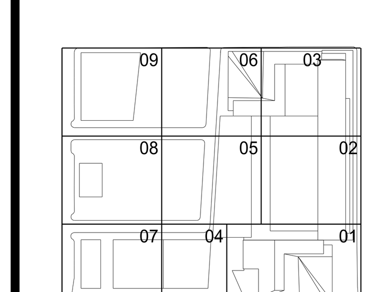

Issue Date 10/15/2016
Project No. N11328.00
Drawn By
Sheet Number

STATE OF NEW YORK · MICHAEL J. SQUARZINI · LIC. NO. 080640 · PROFESSIONAL ENGINEER

Damian Titus
Buildings
APPROVED
Under Directive 2 of 1975
AMENDED APPLICATION
Date: 05/03/2017
NYC Development Hub

HYE-TA-S4-2024
Drawing Title

TYPICAL PERIMETER BEAM DETAILS

Drawing Number
S4-2024
B-Scan Drawing Number
S-644.00
SHEET 342 OF 443

© 2013 KOHN PEDERSEN FOX ASSOCIATES PC All rights reserved

DEPT OF BUILDINGS ATTENDED Job Number
ES0202502R Scan Code

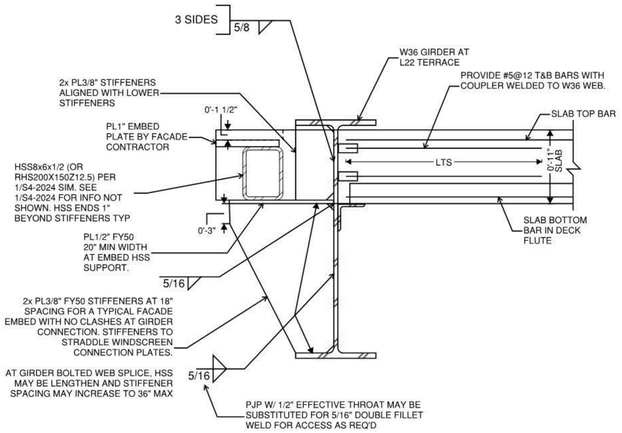

1 LEVEL 22 TERRACE FACADE EMBED SUPPORT AT HIGH PERIMETER GIRDER
NOT TO SCALE

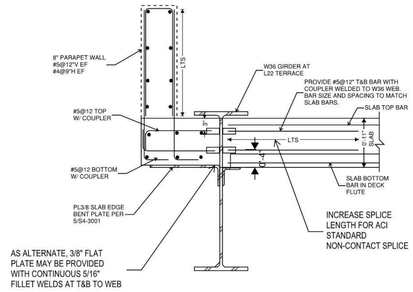

2 Copy of LEVEL 22 TERRACE TYPICAL SLAB EDGE AND PARAPET DETAIL AT HIGHT PERIMETER GIRDER
NOT TO SCALE

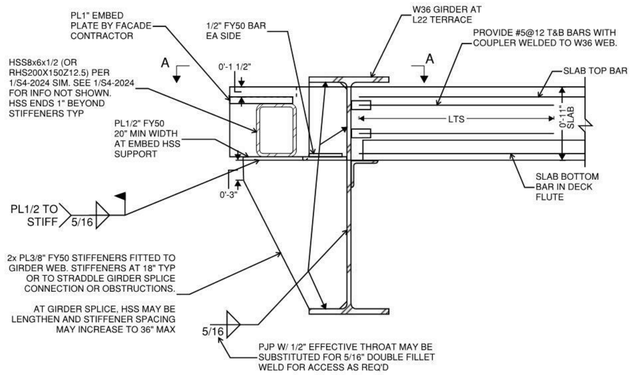

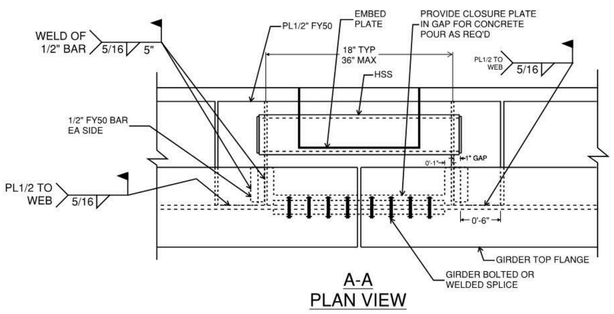

3 LEVEL 22 TERRACE FACADE EMBED SUPPORT IN FRONT OF GIRDER SPLICE
NOT TO SCALE

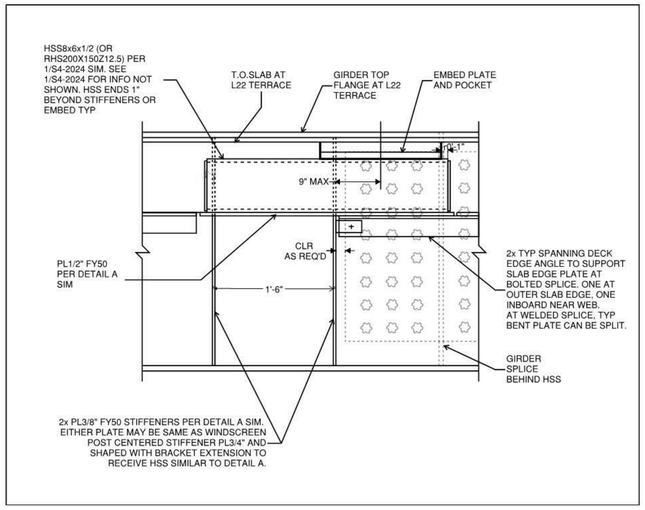

4 LEVEL 22 TERRACE TYPICAL SLAB EDGE AND PARAPET DETAIL AT HIGHT PERIMETER GIRDER
NOT TO SCALE

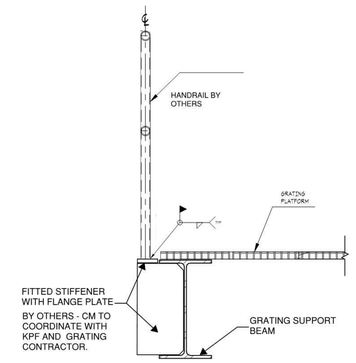

5 HANDRAIL SUPPORT DETAIL AT GRATING PLATFORMS
NOT TO SCALE

HUDSON YARDS - RETAIL PODIUM AND TOWER A
500 WEST 33RD STREET
New York, NY

Client
Related Companies
60 Columbus Circle
New York, NY 10023
TEL: 212.801.1000 FAX: 212.801.1048

Oxford Properties Group
320 Park Avenue, 17th Floor
New York, NY 10022
TEL: 212.986.7514 FAX: 212.986.7510

Architect
Kohn Pedersen Fox Associates
11 West 42nd Street
New York, New York 10036
TEL: 212.977.6500 FAX: 212.956.2526

Structural Engineer
Thornton Tomasetti, Inc.
51 Madison Avenue
New York, New York 10010
TEL: 917.661.7800 FAX: 718.661.7801

Mechanical, Electrical, Plumbing, Fire Protection
Jaros Baum & Bolles Consulting Engineers
80 Pine Street
New York, NY 10013
TEL: 212.530.9300 FAX: 212.269.5894

Retail Interior Design & Planning
Elkus-Manfredi
300 A Street
Boston, MA 02210
TEL: 617.426.1300

No.	Description	Date
1	D.O.B. AMENDMENT #2	10/15/2016

Key Plan

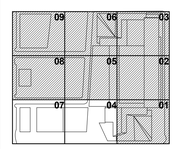

Issue Date: 10/15/2016
Project No. N11328.00
Drawn By Author
Sheet Number

HYE -TA -S4-2031

Drawing Title

FACADE DETAILS

Drawing Number
S4-2031
B-Scan Drawing Number
S-646.00

SHEET 343 OF 443

Damian Titus
APPROVED
Under Directive 2 of 1975
AMENDED APPLICATION
Date: 05/01/2017
NYC Development Hub

0 4' 8' 16'

S4-2031
10/17/2016 3:59:51 PM
FACADE DETAILS
P:\NY\Projects\N11328.00\Drawings\Structural\Record\Issued\2016-10-16 - D.O.B. Amendment No.2\Rev1 - Rev. Removed\HYTA TYP detail_Col Schedule.rvt

CERTIFICATE OF OCCUPANCY NUMBER 5151318MBS

1) SEE 1&2&3/S4-2020 FOR INFORMATION NOT SHOWN

2) AT SLABS UNDER 7.5" TOTAL THICKNESS, BARS SUPPORTING FACADE LOADS MUST BE IN SINGLE LAYER WITH FACADE EMBED TAIL BARS. BARS TO SKEW AND FAN TO AVOID CLASH BETWEEN BARS AND MAINTAIN 2" O.C. MINIMUM PLAN SPACING, TYP. AT 7.5" SLAB AND GREATER, BARS SUPPORTING FACADE LOADS MAY OVERLAP IN MULTIPLE LAYERS. MIN 4.25" CENTERLINE OF BAR TO B.O. SLAB BEYOND POCKET, TYP.

3) BARS MAY BE SKEWED AND/OR BENT TO AVOID CLASH WITH STEEL COLUMNS/NODES OR OPENINGS. MAXIMUM BEND ANGLE OF BAR FROM PERPENDICULAR TO FACADE IS 45 DEGREES AT TYPICAL EMBEDS AND 60 DEGREES AT CORNER EMBEDS. REVIEW WITH EOR IF FURTHER BENDS ARE REQD. BARS MAY HAVE ADDITIONAL BEND IN BACKSPAN TO AVOID CLASH.

4) BARS MAY NOT TERMINATE WITH A HOOK AT FACE OF STEEL COLUMNS/NODES. BARS TO SKEW AROUND STEEL COLUMNS/NODES WHERE POSSIBLE. OTHERWISE, BARS MAY BE WELDED TO FACE OF STEEL COLUMNS/NODES AT CLASH. PROVIDE WELDABLE REINFORCING BARS AS NEEDED.

5) FOR EMBEDS DIRECTLY IN FRONT OF COLUMNS ASSUMED TO BE SUPPORTED BY STEEL, SEE DETAILS ON S4-2024 OR 7/S4-2023 FOR FACADE ATTACHMENT TO STEEL.

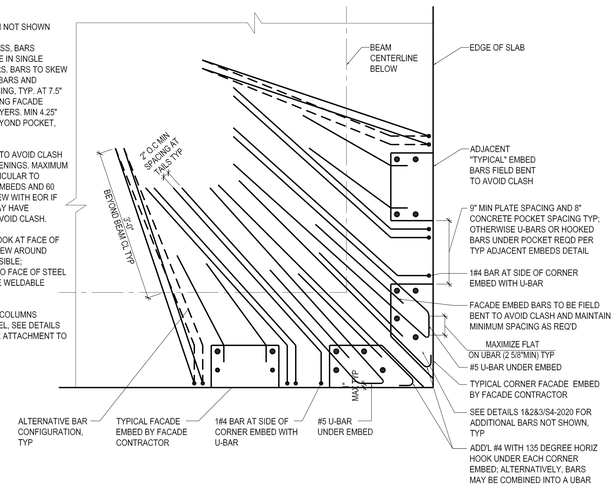

1 TYPICAL CORNER EMBED REINFORCMENT DETAIL
SCALE: 1" = 1'-0"

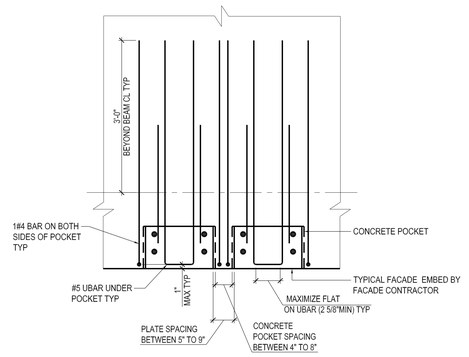

EMBED CONCRETE POCKET SPACING BETWEEN 4" TO 8"

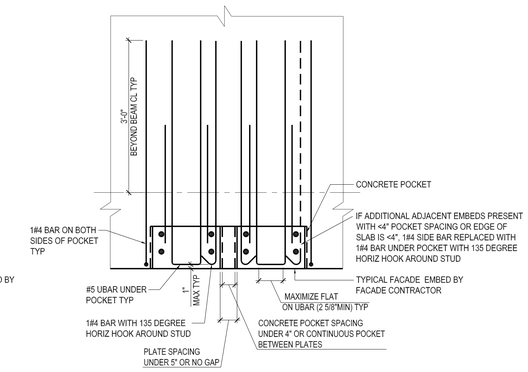

CONCRETE POCKET SPACING 4" AND UNDER

1) SEE 1&2&3/S4-2020 FOR INFORMATION NOT SHOWN
2) <4" POCKET SPACING DETAIL MAY ALSO BE USED AT EDGE OF SLAB CONDITIONS AND AT COLUMN CLOSE TO EMBEDS.
3) THIS DETAIL MAY BE USED IN COMBINATION WITH TYPICAL CORNER DETAIL AT EMBEDS NEAR CORNER EMBEDS. SEE TYPICAL CORNER DETAIL FOR BAR SKEW AND BENDS NOTES
4) BARS MAY BE WELDED TO FACE OF STEEL COLUMNS/NODES AT CLASH. PROVIDE WELDABLE REINFORCING BARS AS NEEDED.

2 TYPICAL ADJACENT EMBEDS REINFORCEMENT DETAIL
SCALE: 1" = 1'-0"

Damian Titus
Buildings
APPROVED
Under Directive 2 of 1975
MUNICIPAL REGULATION
Date: 05/03/2017
NYC Development Hub

HUDSON YARDS - RETAIL PODIUM AND TOWER A

500 WEST 33RD STREET
New York, NY

Client
Related Companies
60 Columbus Circle
New York, NY 10023
TEL: 212.801.1000 FAX: 212.801.1048

Oxford Properties Group
320 Park Avenue, 17th Floor
New York, NY 10022
TEL: 212.986.7514 FAX: 212.986.7510

Architect
Kohn Pedersen Fox Associates
11 West 42nd Street
New York, New York 10036
TEL: 212.977.6500 FAX: 212.956.2526

Structural Engineer
Thornton Tomasetti, Inc.
51 Madison Avenue
New York, New York 10010
TEL: 917.661.7800 FAX: 718.661.7801

Mechanical, Electrical, Plumbing, Fire Protection
Jaros Baum & Bolles Consulting Engineers
80 Pine Street
New York, NY 10013
TEL: 212.530.9300 FAX: 212.269.5894

Retail Interior Design & Planning
Elkus-Manfredi
300 A Street
Boston, MA 02210
TEL: 617.426.1300

No.	Description	Date
1	D.O.B. AMENDMENT #2	10/15/2016

Key Plan

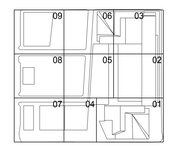

Issue Date 10/15/2016
Project No. N11328.00
Drawn By
Sheet Number

HYE-TA-S4-3005
Drawing Title

TYPICAL PERIMETER BEAM DETAILS

Drawing Number
S4-3005
Kohn Drawing Number
S-654.00

© 2013 KOHN PEDERSEN FOX ASSOCIATES PC. All rights reserved.

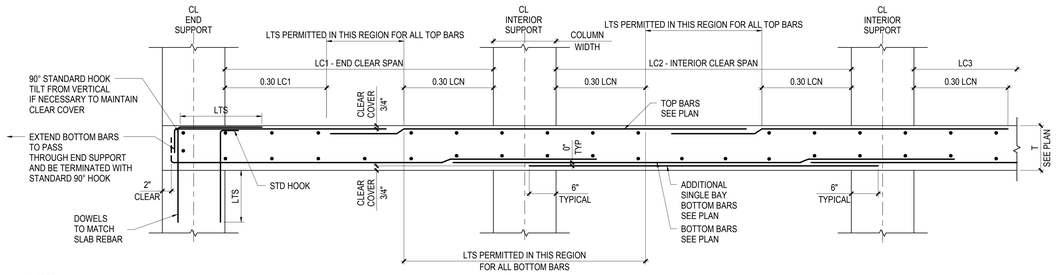

NOTES:

1. LCN DENOTES LARGER OF ADJACENT CLEAR SPANS

2. ADDITIONAL MULTI-BAY BOTTOM BARS TO BE SPLICED AS SHOWN ABOVE AND EXTEND 6" INTO SUPPORT AT BAR END

1 CN-2SL-01A_ TYPICAL TWO-WAY SLAB
NOT TO SCALE

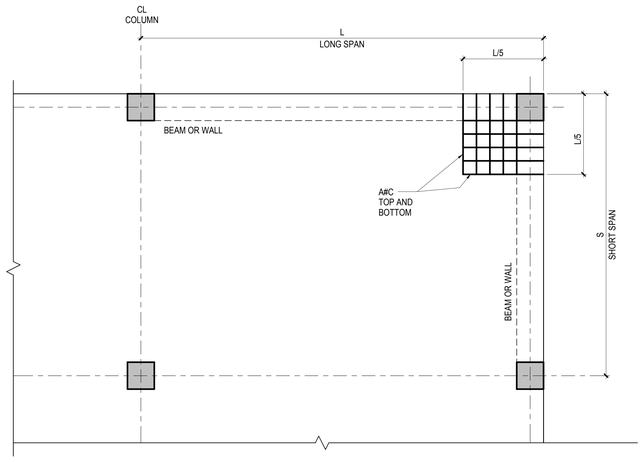

NOTES:

1. SEE PLAN FOR SLAB REINFORCEMENT
   BARS SHOWN ABOVE ARE ADDITIONAL TO THOSE SHOWN ON PLAN
   BARS SHALL BE LOCATED IN SAME LAYERS AS SLAB REINFORCEMENT
   BEAM TOP BARS TO BE LOCATED BELOW SLAB TOP BARS

2. ADDITIONAL BARS TO BE EQUALLY SPACED WITHIN EXTENT SHOWN ABOVE

3. ADDITIONAL TOP BARS TO BE HOOKED INTO SUPPORT

TYPICAL BEAM OR WALL SUPPORTED SLAB EXTERIOR CORNER DETAIL
3
NOT TO SCALE

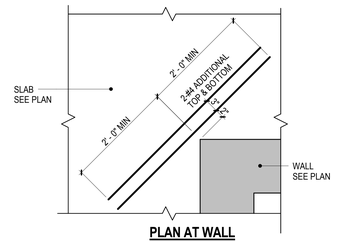

PLAN AT WALL

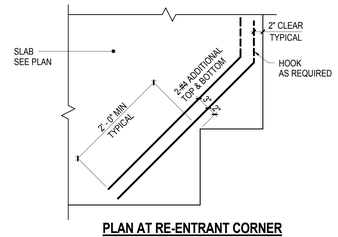

PLAN AT RE-ENTRANT CORNER

5 TYPICAL CORNER SLAB DETAILS
NOT TO SCALE

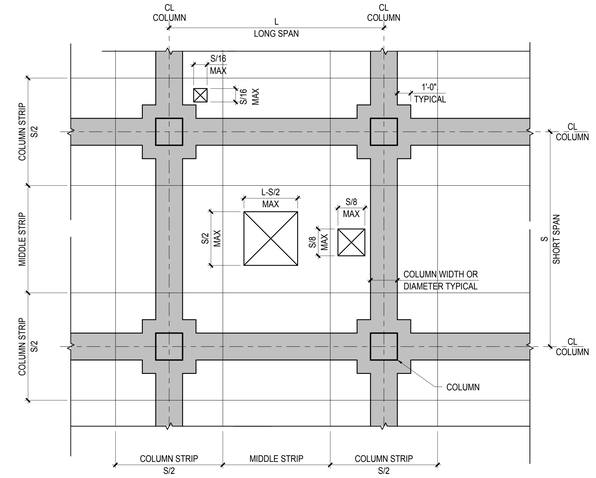

NOTES:

1. INDICATES ZONE WHERE OPENINGS ARE NOT PERMITTED WITHOUT WRITTEN APPROVAL BY SER
   OPENINGS NOT SHOWN ON STRUCTURAL DRAWINGS MUST BE COORDINATED AND APPROVED BY SER

2. OPENINGS MEETING THE LIMITATIONS ABOVE SHALL BE PROVIDED WITH REINFORCEMENT AS SHOWN ON PLAN AND FOLLOWING TYPICAL SLAB OPENING DETAILS INCLUDING ADDITIONAL BARS FOR INTERRUPTED REINFORCEMENT

3. OPENINGS SHALL BE SHOWN ON COORDINATED PENETRATION DRAWINGS AND REINFORCEMENT SHOP DRAWINGS FOR SER REVIEW

4. OPENINGS NOT MEETING THESE LIMITATIONS MUST BE SUBMITTED TO THE SER FOR COORDINATION, DESIGN, AND APPROVAL PRIOR TO SUBMITTING SHOP DRAWINGS

2 TYPICAL TWO-WAY SLAB OPENING LIMITATIONS
NOT TO SCALE

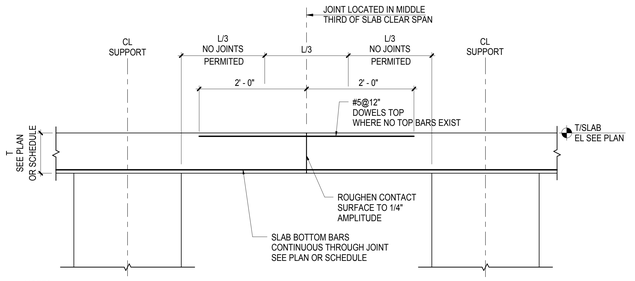

NOTES:

1. CONTRACTOR SHALL SUBMIT CONSTRUCTION JOINT LAYOUT PLAN FOR SER APPROVAL

2. FOR SLAB REINFORCEMENT NOT SHOWN, SEE PLAN OR SCHEDULE

6 TYPICAL SLAB CONSTRUCTION JOINT
NOT TO SCALE

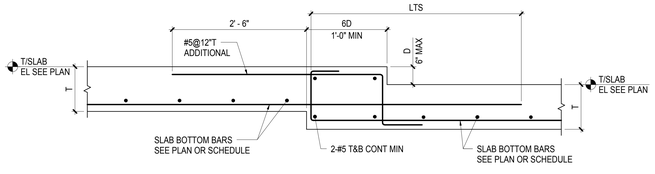

D LESS THAN T MINUS 2 INCHES
BOTTOM BARS INTERRUPTED BY STEP

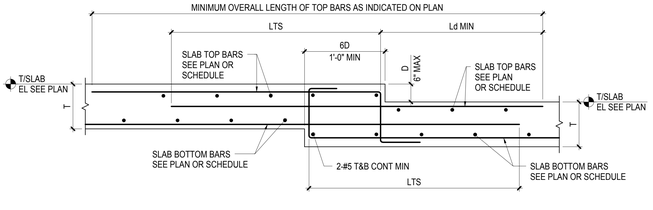

D LESS THAN T MINUS 2 INCHES
TOP AND BOTTOM BARS INTERRUPTED BY STEP

4 TYPICAL STEP IN SLAB DETAILS
NOT TO SCALE

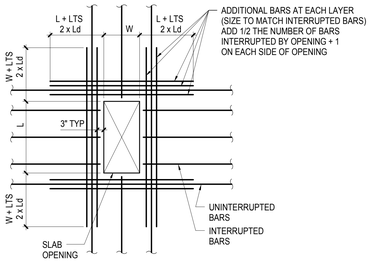

ADDITIONAL BARS WHERE BARS ARE INTERRUPTED

NOTES: ADDITIONAL BARS

1. PROVIDE ADDITIONAL BARS ON EACH SIDE OF OPENING FOR TOP AND BOTTOM BARS THAT ARE INTERRUPTED BY OPENINGS DISTRIBUTE REPLACEMENT BARS EQUALLY TO BOTH SIDES OF OPENING AT 3" SPACING

2. PROVIDE A MINIMUM OF 2 BARS EACH SIDE OF OPENING TOP AND BOTTOM WHERE NO TOP BARS ARE PRESENT, PROVIDE ADDITIONAL TOP BARS SHOWN ABOVE

3. AT CLUSTERED OPENINGS, PROVIDE THESE ADDITIONAL BARS AROUND THE CLUSTER PLUS THE ADDITIONAL BARS SHOWN IN THE CLUSTERED OPENING DETAIL

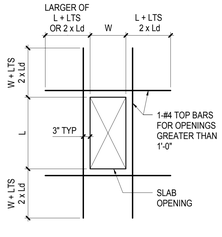

ADDITIONAL TOP BARS WHERE NO TOP BARS ARE PRESENT

ADDITIONAL TOP BARS	
OPENING SIZE (LARGER DIMENSION OF OPENING)	TOP BARS ALL SIDE
0 - 12"	NONE
12" - 36"	1 - #4

7 TYPICAL SLAB OPENING DETAILS
NOT TO SCALE

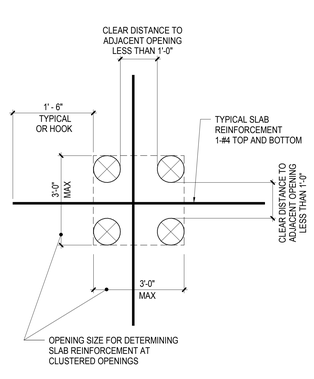

TYPE 1

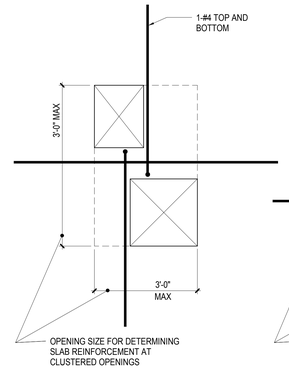

TYPE 2
SEE TYPE 1 FOR INFORMATION NOT SHOWN

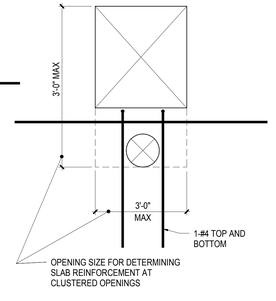

TYPE 3
SEE TYPE 1 FOR INFORMATION NOT SHOWN

CLUSTERED OPENING ADDITIONAL REINFORCEMENT

NOTES: CLUSTERED OPENINGS

1. THE REINFORCEMENT REQUIREMENTS AT CLUSTERED OPENING ARE IN ADDITION TO THE TYPICAL SLAB OPENING DETAIL REQUIREMENTS AROUND THE ENTIRE CLUSTER

2. FOR ONE-WAY SLABS, WHEN CLUSTERED OPENING IS GREATER THAN 2 FEET, SUBMIT TO SER FOR APPROVAL.

3. FOR TWO-WAY SLABS, WHEN CLUSTERED OPENING DOES NOT MEET TWO-WAY SLAB OPENING LIMITATIONS OR IS GREATER THAN 3 FEET, SUBMIT TO SER FOR APPROVAL

Damian Titus
Buildings
APPROVED
Under Directive 2 of 1975
AMENDED APPLICATION
Date: 05/03/2017
NYC Development Hub

0 4' 8' 16'

N

HUDSON YARDS - RETAIL PODIUM AND TOWER A

500 WEST 33RD STREET
New York, NY

Client
Related Companies
60 Columbus Circle
New York, NY 10023
TEL: 212.801.1000 FAX: 212.801.1048

Oxford Properties Group
320 Park Avenue, 17th Floor
New York, NY 10022
TEL: 212.986.7514 FAX: 212.986.7510

Architect
Kohn Pedersen Fox Associates
11 West 42nd Street
New York, New York 10036
TEL: 212.977.6500 FAX: 212.956.2526

Structural Engineer
Thornton Tomasetti, Inc.
51 Madison Avenue
New York, New York 10010
TEL: 917.661.7800 FAX: 718.661.7801

Mechanical, Electrical, Plumbing, Fire Protection
Jaros Baum & Bolles Consulting Engineers
80 Pine Street
New York, NY 10013
TEL: 212.530.9300 FAX: 212.269.5894

Retail Interior Design & Planning
Elkus-Manfredi
300 A Street
Boston, MA 02210
TEL: 617.426.1300

No.	Description	Date
1	D.O.B. AMENDMENT #2	10/15/2016

Key Plan

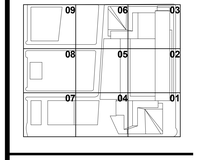

Issue Date: 10/15/2016
Project No. N11328.00
Drawn By Author
Sheet Number HYE -TA -S4-6001
Drawing Title

TYPICAL CONCRETE TWO-WAY SLAB DETAILS

Drawing Number S4-6001
Previous Drawing Number S-693.00

© 2017 KOHN PEDERSEN FOX ASSOCIATES P.C. All rights reserved

S4-6001 10/17/2016 4:14:54 PM TYPICAL CONCRETE TWO-WAY SLAB DETAILS P:\NY\Projects\N11328.003\Drawings\Structural\Record\Issued\2016-10-16 - D.O.B. Amendment No.2\Revit - Rev. Removed\HYTA_EMR.rvt

ABOVE LEVEL 11, FOR LOCATIONS WHERE BB COLUMNS ARE DETAILED WITH LONGITUDINAL FILLET WELDS IN RFD MODELS, FURNISH THE WELD SIZE ACCORDING TO SCHEDULE GIVEN BELOW. FOR LONGITUDINAL WELDS IN REINFORCED WELD ZONES PER CONNECTION DETAILS, PROVIDE A PJP WITH EFFECTIVE THROAT EQUAL TO THE FILLET WELD LEG SIZE IN LIEU OF THE FILLET WELD INDICATED. THIS PJP SHALL NOT BE LESS THAN SHOWN IN THIS SCHEDULE.

COLUMN TYPE BS SCHEDULE

MARK	TYPE	D (in)	B (in)	Fy (ksi)	LAMINATIONS (a-b-c-d-e-f-g-h-i-j)	WELD A (E)
BS40X40-A	NS	40	40	65	4-4-4-4-4-4-4-4-4-4	5/8"
	EW	40	40	65	4-4-4-4-4-4-4-4-4-4	5/8"
BS40X40	NS	40	40	50	6-6-4-4-4-4-6-6	5/8"
	EW	40	40	50	6-6-4-4-4-4-6-6	5/8"
BS40X38	NS	40	38	50	6-6-5-4-5-6-6	5/8"
	EW	40	38	50	6-6-4-4-4-4-6-6	5/8"
BS38X38	NS	38	38	50	6-6-5-4-5-6-6	5/8"
	EW	38	38	50	6-6-5-4-5-6-6	5/8"
BS38X36-A	NS	38	36	65	4-4-4-4-4-4-4-4-4	5/8"
	EW	38	36	65	4-4-3-4-4-4-4-3-4-4	5/8"
BS38X36	NS	38	36	50	6-6-6-6-6-6	5/8"
	EW	38	36	50	6-6-5-4-5-6-6	5/8"
BS38X34	NS	38	34	50	6-6-5-5-6-6	5/8"
	EW	38	34	50	6-6-5-4-5-6-6	5/8"
BS38X32	NS	38	32	50	6-6-4-4-6-6	5/8"
	EW	38	32	50	6-6-5-4-5-6-6	5/8"
BS38X30	NS	38	30	50	6-6-6-6-6	5/8"
	EW	38	30	50	6-6-5-4-5-6-6	5/8"
BS36X36-A	NS	36	36	65	4-4-4-4-4-4-4-4-4	5/8"
	EW	36	36	65	4-4-4-4-4-4-4-4-4	5/8"
BS36X36-B	NS	36	36	65	4-4-4-4-4-4-4-4-4	7/8"
	EW	36	36	65	4-4-4-4-4-4-4-4-4	7/8"
BS36X36-C	NS	36	36	50	6-6-6-6-6-6	3/4"
	EW	36	36	50	6-6-6-6-6-6	3/4"
BS36X36-D	NS	36	36	50	6-6-6-6-6-6	7/8"
	EW	36	36	50	6-6-6-6-6-6	7/8"
BS36X36	NS	36	36	50	6-6-6-6-6-6	5/8"
	EW	36	36	50	6-6-6-6-6-6	5/8"
BS36X34	NS	36	34	50	6-6-5-5-6-6	5/8"
	EW	36	34	50	6-6-6-6-6-6	5/8"
BS36X32	NS	36	32	50	6-6-4-4-6-6	5/8"
	EW	36	32	50	6-6-6-6-6-6	5/8"
BS34X34	NS	34	34	50	6-6-5-5-6-6	5/8"
	EW	34	34	50	6-6-5-5-6-6	5/8"
BS34X32	NS	34	32	50	6-6-4-4-6-6	5/8"
	EW	34	32	50	6-6-5-5-6-6	5/8"
BS34X28	NS	34	28	50	6-5-6-5-6	5/8"
	EW	34	28	50	6-6-5-5-6-6	5/8"
BS32X32	NS	32	32	50	6-6-4-4-6-6	5/8"
	EW	32	32	50	6-6-4-4-6-6	5/8"
BS32X32-A	NS	32	32	50	6-6-4-4-6-6	3/4"
	EW	32	32	50	6-6-4-4-6-6	3/4"
BS32X32-B	NS	32	32	50	6-6-4-4-6-6	7/8"
	EW	32	32	50	6-6-4-4-6-6	7/8"
BS32X30	NS	32	30	50	6-6-6-6-6	5/8"
	EW	32	30	50	6-6-4-4-6-6	5/8"
BS32X30-A	NS	32	30	50	6-6-6-6-6	3/4"
	EW	32	30	50	6-6-4-4-6-6	3/4"
BS32X30-B	NS	32	30	50	6-6-6-6-6	7/8"
	EW	32	30	50	6-6-4-4-6-6	7/8"
BS32X30-C	NS	32	30	50	6-6-6-6-6	1"
	EW	32	30	50	6-6-4-4-6-6	1"
BS32X24	NS	32	24	50	6-6-6-6	5/8"
	EW	32	24	50	6-6-4-4-6-6	5/8"
BS30X36	NS	30	36	50	6-6-6-6-6-6	5/8"
	EW	30	36	50	6-6-6-6-6	5/8"
BS30X34	NS	30	34	50	6-6-5-5-6-6	5/8"
	EW	30	34	50	6-6-6-6-6	5/8"
BS30X32	NS	30	32	50	6-6-4-4-6-6	5/8"
	EW	30	32	50	6-6-6-6-6	5/8"
BS30X32-A	NS	30	32	50	6-6-4-4-6-6	3/4"
	EW	30	32	50	6-6-6-6-6	3/4"
BS30X32-B	NS	30	32	50	6-6-4-4-6-6	1"
	EW	30	32	50	6-6-6-6-6	1"
BS30X30	NS	30	30	50	6-6-6-6-6	5/8"
	EW	30	30	50	6-6-6-6-6	5/8"
BS30X30-A	NS	30	30	50	6-6-6-6-6	3/4"
	EW	30	30	50	6-6-6-6-6	3/4"
BS30X30-B	NS	30	30	50	6-6-6-6-6	1"
	EW	30	30	50	6-6-6-6-6	1"
BS30X28	NS	30	28	50	6-5-6-5-6	5/8"
	EW	30	28	50	6-6-6-6-6	5/8"
BS28X30	NS	28	30	50	6-6-6-6-6	5/8"
	EW	28	30	50	6-5-6-5-6	5/8"
BS28X30-A	NS	28	30	50	6-6-6-6-6	7/8"
	EW	28	30	50	6-5-6-5-6	7/8"
BS28X28	NS	28	28	50	6-5-6-5-6	5/8"
	EW	28	28	50	6-5-6-5-6	5/8"
BS28X28-A	NS	28	28	50	6-5-6-5-6	7/8"
	EW	28	28	50	6-5-6-5-6	7/8"
BS28X26	NS	28	26	50	6-5-4-5-6	5/8"
	EW	28	26	50	6-5-6-5-6	5/8"
BS28X26-A	NS	28	26	50	6-5-4-5-6	3/4"
	EW	28	26	50	6-5-6-5-6	3/4"
BS28X26-B	NS	28	26	50	6-5-4-5-6	7/8"
	EW	28	26	50	6-5-6-5-6	7/8"
BS28X24	NS	28	24	50	6-6-6-6	5/8"
	EW	28	24	50	6-5-6-5-6	5/8"
BS28X24-A	NS	28	24	65	4-4-4-4-4-4-4	3/4"
	EW	28	24	65	4-4-4-4-4-4-4	3/4"
BS30X36-A	NS	30	36	65	4.5-4.5-4.5-4.5-4.5-4.5-4.5-4.5	5/8"
	EW	30	36	65	4-4-4-3-3-4-4-4	5/8"

COLUMN TYPE BB SCHEDULE

MARK	D (in)	B (in)	Tf (in)	Tw1 (in)	Tw2 (in)	Fy (ksi)	WELD A (E)	BELOW LEVEL 11 WELD B (E)	BELOW LEVEL 11 WELD B (W)	LEVEL 11 & UP WELD B (E)	LEVEL 11 & UP WELD B (W)
BB22X22X4X4	22	22	4	4	-	50	-	-	1/2"	5/8"	-
BB24X24X0.75X0.75	24	24	0.75	0.75	-	50	-	-	1/2"	5/8"	-
BB24X24X1X1	24	24	1	1	-	50	-	-	1/2"	5/8"	-
BB24X24X1.5X1.5	24	24	1.5	1.5	-	50	-	-	1/2"	5/8"	-
BB24X24X2.25X2.25	24	24	2.25	2.25	-	50	-	-	1/2"	5/8"	-
BB28X28X4X4	28	28	4	4	-	50	-	-	1/2"	5/8"	-
BB28X28X3X3	28	28	3	3	-	50	-	-	1/2"	5/8"	-
BB28X28X2X2	28	28	2	2	-	50	-	-	1/2"	5/8"	-
BB28X28X1X1	28	28	1	1	-	50	-	-	1/2"	5/8"	-
BB26X18X4X4	26	18	4	4	-	50	-	-	1/2"	5/8"	-
BB24X28X8X10	24	28	8	6	4	50	5/8"	5/8"	-	5/8"	-
BB24X28X8X9	24	28	8	6	3	50	5/8"	5/8"	-	5/8"	-
BB24X28X8X8	24	28	8	4	4	50	5/8"	5/8"	-	5/8"	-
BB24X28X7.5X8	24	28	7.5	4	4	50	5/8"	5/8"	-	5/8"	-
BB24X28X7X8	24	28	7	4	4	50	5/8"	5/8"	-	5/8"	-
BB24X28X6.5X8	24	28	6.5	4	4	50	5/8"	5/8"	-	5/8"	-
BB24X28X6X8	24	28	6	4	4	50	5/8"	5/8"	-	5/8"	-
BB24X28X5.5X6	24	28	5.5	4	4	50	5/8"	5/8"	-	5/8"	-
BB24X28X5X8	24	28	5	4	4	50	5/8"	5/8"	-	5/8"	-
BB24X28X5X8-A	24	28	5	4	4	50	3/4"	3/4"	-	3/4"	-
BB24X28X4.5X8	24	28	4.5	4	4	50	5/8"	5/8"	-	5/8"	-
BB24X28X6X11	24	28	6	6	5	50	5/8"	5/8"	-	5/8"	-
BB24X28X6X10	24	28	6	6	4	50	5/8"	5/8"	-	5/8"	-
BB24X28X6X9	24	28	6	6	3	50	5/8"	5/8"	-	5/8"	-
BB24X28X6X9-A	24	28	6	6	3	50	3/4"	3/4"	-	3/4"	-
BB24X28X6X8	24	28	6	4	4	50	5/8"	5/8"	-	5/8"	-
BB24X28X6X7	24	28	6	4	3	50	5/8"	5/8"	-	5/8"	-
BB24X28X6X6	24	28	6	6	-	50	-	-	1/2"	5/8"	-
BB24X28X6X5.5	24	28	6	5.5	-	50	-	-	1/2"	5/8"	-
BB24X28X6X5	24	28	6	5	-	50	-	-	1/2"	5/8"	-
BB24X28X6X4	24	28	6	4	-	50	-	-	1/2"	5/8"	-
BB24X28X6X3.5	24	28	6	3.5	-	50	-	-	1/2"	5/8"	-
BB24X28X6X3.5-A	24	28	6	3.5	-	50	-	-	5/8"	5/8"	-
BB24X28X6X3.5-B	24	28	6	3.5	-	50	-	-	3/4"	5/8"	-
BB24X28X4.5X7	24	28	4.5	4-3	-	50	-	-	1/2"	5/8"	-
BB28X24X4X6	28	24	4	6	-	50	-	-	1/2"	5/8"	-
BB28X24X5X6	28	24	5	6	-	50	-	-	1/2"	5/8"	-
BB28X24X6X4	28	24	6	4	-	50	-	-	1/2"	5/8"	-
BB28X24X6X5	28	24	6	5	-	50	-	-	1/2"	5/8"	-
BB28X24X6X6	28	24	6	6	-	50	-	-	1/2"	5/8"	-
BB28X24X6X7	28	24	6	4	3	50	5/8"	5/8"	-	5/8"	-
BB28X24X6X8	28	24	6	4	4	50	5/8"	5/8"	-	5/8"	-
BB28X24X6X9	28	24	6	6	3	50	5/8"	5/8"	-	5/8"	-
BB28X24X8X4.5	28	24	4-4	4.5	-	50	5/8"	5/8"	-	5/8"	-
BB28X24X8X4.5-A	28	24	4-4	4.5	-	50	1"	1"	-	1"	-
BB28X24X4.5X4.5	28	24	4.5	4.5	-	50	-	-	1/2"	5/8"	-
BB20X20X4X4	20	20	4	4	-	50	-	-	1/2"	5/8"	-
BB28X24X6X2	28	24	6	2	-	50	-	-	-	5/8"	-
BB28X24X6X2.5	28	24	6	2.5	-	50	-	-	-	5/8"	-
BB24.625X20X6X2	24.625	20	6	2	-	50	-	-	-	5/8"	-
BB24.625X28X6X2	24.625	28	6	2	-	50	-	-	-	5/8"	-
BB24X24X1X1-A	24	24	1	1	-	65	-	-	1/2"	5/8"	-
BB24X24X1.5X1.5-A	24	24	1.5	1.5	-	65	-	-	1/2"	5/8"	-
BB24X28X6X5-A	24	28	6	5	-	65	-	-	1/2"	5/8"	-

COLUMN TYPE BW SCHEDULE

MARK	D (in)	B (in)	Tf (in)	Tw (in)	Fy (ksi)	WELD A (E)	WELD A (W)
BW28X24X8X8	28	24	8	8	50		1/2"
BW28X24X8X7.5	28	24	8	7.5	50		1/2"
BW28X24X8X7	28	24	8	7	50		1/2"
BW28X24X8X6.5	28	24	8	6.5	50		1/2"
BW28X24X8X6	28	24	8	6	50		1/2"
BW28X24X8X5.5	28	24	8	5.5	50		1/2"
BW28X24X8X5	28	24	8	5	50		1/2"
BW28X24X8X4.5	28	24	8	4.5	50		1/2"
BW28X24X8X4	28	24	8	4	50		1/2"
BW28X24X6X11	28	24	6	5.5-5.5	50	5/8"	-
BW28X24X6X10	28	24	6	5-5	50	5/8"	-
BW28X24X6X9	28	24	6	4.5-4.5	50	5/8"	-
BW28X24X6X8	28	24	6	4-4	50	5/8"	-
BW28X24X6X7	28	24	6	3.5-3.5	50	5/8"	-
BW28X24X6X6	28	24	6	6	50		1/2"
BW28X24X6X5	28	24	6	5	50		1/2"
BW28X24X6X4	28	24	6	4	50		1/2"
BW28X24X6X4-A	28	24	6	4	50		5/8"
BW28X22X6X4	28	22	6	4	50		1/2"
BS28X20X6X4	28	20	6	4	50		1/2"
BW28X18X6X4	28	18	6	4	50		1/2"
BW27.625X24X7.5X4	27.6	24	7.5	4	50		1/2"
BW27X24X7.5X4	27	24	7.5	4	50		1/2"
BW26.625X24X7X4	26.6	24	7	4	50		1/2"
BW26X24X7X4	26	24	7	4	50		1/2"
BW25.625X24X6.5X4	25.6	24	6.5	4	50		1/2"
BW25X24X6.5X4	25	24	6.5	4	50		1/2"
BW24.625X28X6X11	24.625	28	6	5.5-5.5	50	5/8"	-
BW24.625X28X6X11-A	24.625	28	6	5.5-5.5	50	7/8"	-
BW24.625X28X6X9	24.625	28	6	4.5-4.5	50	5/8"	-
BW24.625X28X6X10	24.625	28	6	5-5	50	5/8"	-
BW24.625X28X6X8	24.625	28	6	4-4	50	5/8"	-
BW24.625X28X6X7	24.625	28	6	3.5-3.5	50	5/8"	-
BW24.625X28X6X6	24.625	28	6	6	50		1/2"
BW24.625X28X6X5	24.625	28	6	5	50		1/2"
BW24.625X28X6X4	24.625	28	6	4	50		1/2"
BW24.625X28X6X4-A	24.625	28	6	4	50		5/8"
BW24.625X26X6X4	24.625	26	6	4	50		1/2"
BW24.625X24X6X4	24.625	24	6	4	50		1/2"
BW24.625X24X6X4-A	24.625	24	6	4	50		5/8"
BW24.625X24X6X4-B	24.625	24	6	4	50		3/4"
BW24.625X22X6X4	24.625	22	6	4	50		1/2"
BW24.625X22X6X4-A	24.625	22	6	4	50		5/8"
BW24.625X22X6X4-B	24.625	22	6	4	50		3/4"
BW24.625X22X6X4-C	24.625	22	6	4	50		3/4"
BW24.625X20X6X4	24.625	20	6	4	50		1/2"
BW24.625X18X6X4	24.625	18	6	4	50		1/2"
BW24.625X18X6X4-A	24.625	18	6	4	50		5/8"
BW24X24X6X4	24	24	6	4	50		1/2"
BW24X24X5X4	24	24	5	4	50		7/8"
BW24X22X6X4	24	22	6	4	50		1/2"
BW24X22X6X4-A	24	22	6	4	50		5/8"
BW24X20X6X4	24	20	6	4	50		1/2"
BW24X20X6X4-A	24	20	6	4	50		5/8"
BW24X18X6X4	24	18	6	4	50		1/2"
BW23X18X5.5X4	23	18	5.5	4	50		1/2"
BW24X24X7X4	24	24	7	4	50		11/16"
BW24X24X4X4	24	24	4	4	50		15/16"
BW24.625X30X6X10	24.625	30	6	5+5	50	1 1/4"	

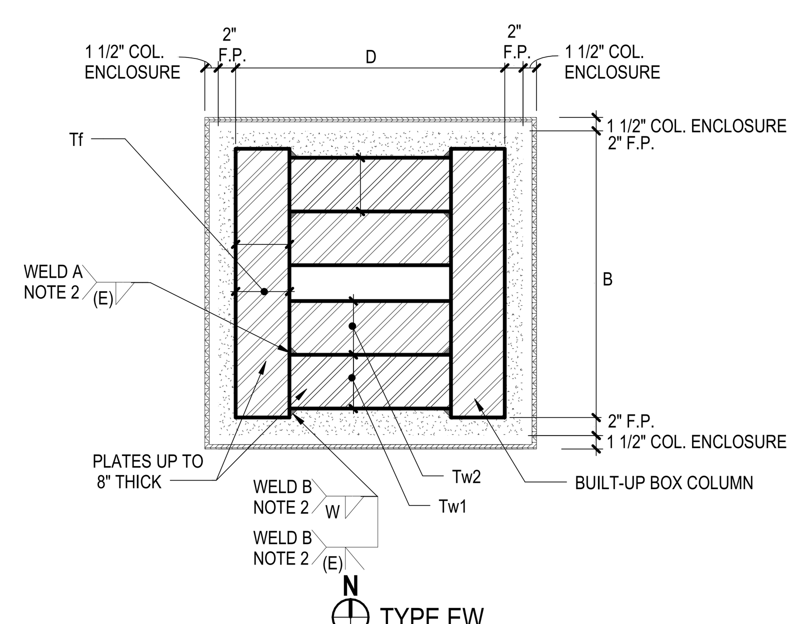

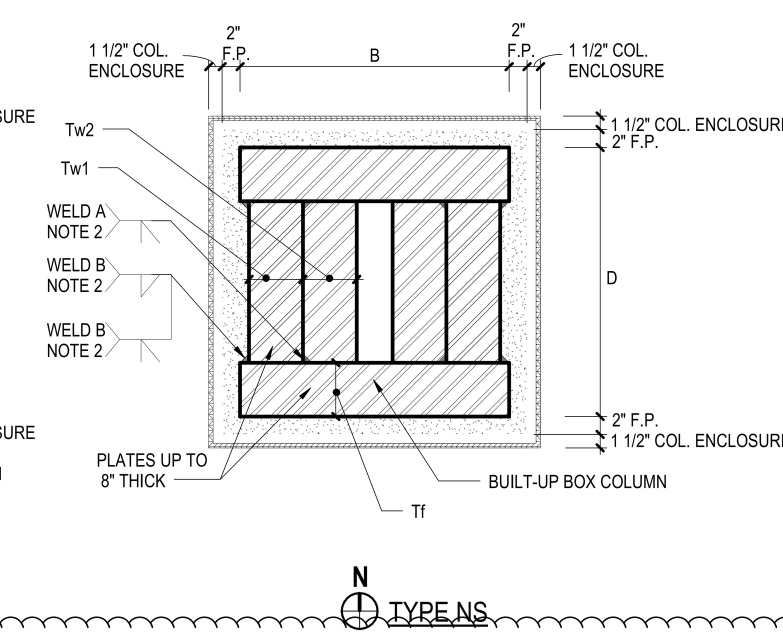

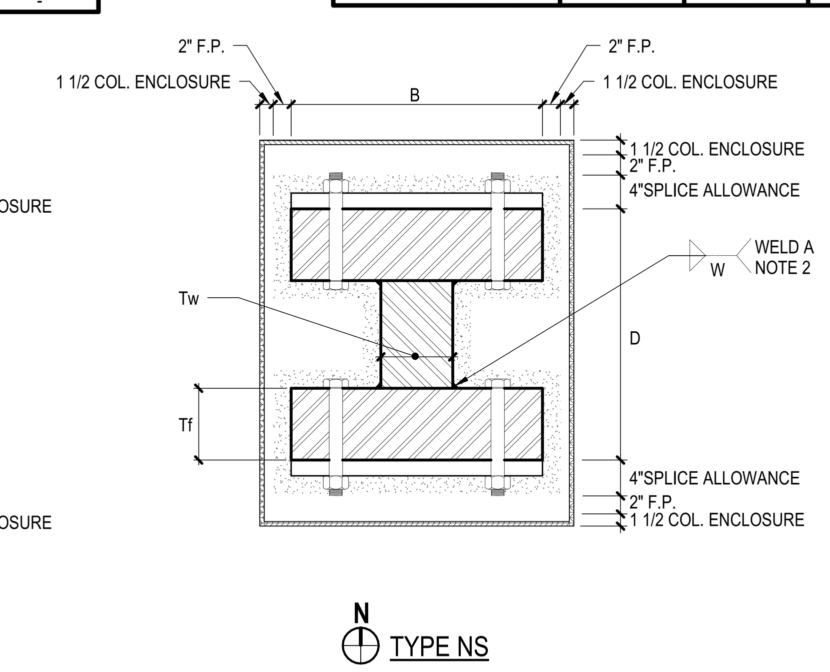

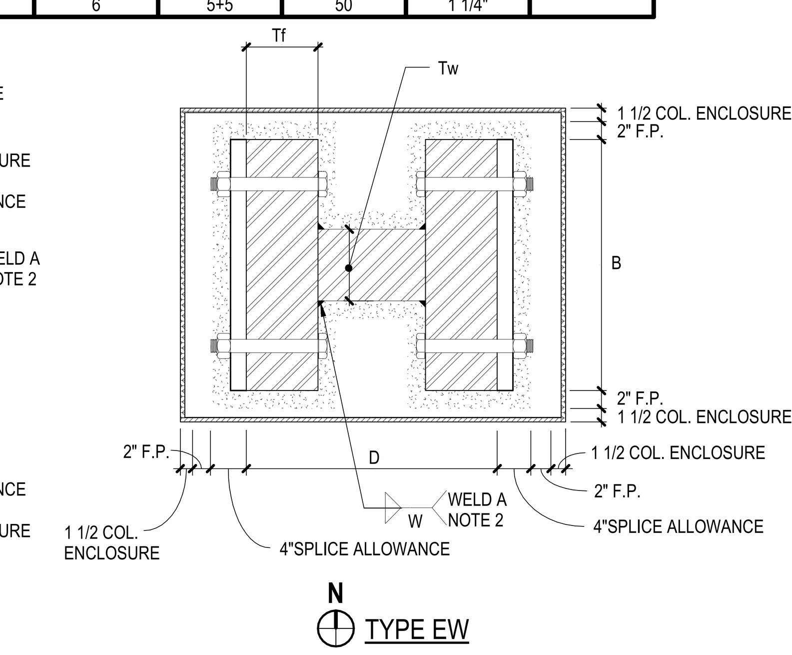

2 COLUMN TYPE BB - BUILT-UP BOX COLUMN

1" = 1'-0"

NOTES:
1. COLUMN SPLICES ARE ANTICIPATED TO BE FIELD WELDED USING PARTIAL JOINT PENETRATION (PJP) WELDS. SEE SCHEDULE 5/S5-0002.
2. LONGITUDINAL WELDS TO BE INCREASED LOCALLY AS REQUIRED FOR CONNECTION DESIGN.
3. ALL STEEL PLATES FOR THESE COLUMNS ARE TO BE A572 GRADE 50. FOR PLATES THICKER THAN 4", CONTRACTOR TO PROCURE GRADE 50 MATERIAL OR SUBSTITUTE BY BUILDING UP THE FLANGE/WEB WITH SMALLER GRADE 50 PLATES.
4. FOR LEVEL 1 TO 10 COLUMNS, REFER TO TABLE FOR LONGITUDINAL COLUMN WELD SIZES. FOR COLUMNS LEVEL 11 AND UP, REFER TO THE TABLE UNLESS AN ATYPICAL WELD SIZE IS NOTED EXPLICITLY ON THE COLUMN SCHEDULES.

3 COLUMN TYPE BW - BUILD-UP WIDE FLANGE COLUMN

1" = 1'-0"

NOTES:
1. COLUMN SPLICES ARE ANTICIPATED TO BE FIELD BOLTED. REFER TO SCHEDULE 5/S5-0002.
2. LONGITUDINAL WELDS TO BE INCREASED LOCALLY AS REQUIRED FOR CONNECTION DESIGN.
3. ALL STEEL PLATES FOR THESE COLUMNS ARE TO BE A572 GRADE 50. FOR PLATES THICKER THAN 4", CONTRACTOR TO PROCURE GRADE 50 MATERIAL OR SUBSTITUTE BY BUILDING UP THE FLANGE/WEB WITH SMALLER GRADE 50 PLATES.
4. FOR LEVEL 1 TO 10 COLUMNS, REFER TO TABLE FOR LONGITUDINAL COLUMN WELD SIZES. FOR COLUMNS LEVEL 11 AND UP, REFER TO THE TABLE UNLESS AN ATYPICAL WELD SIZE IS NOTED EXPLICITLY ON THE COLUMN SCHEDULES.

COLUMN TYPE TP SCHEDULE

MARK	D (in)	B (in)	b (in)	Tf (in)	Tw (in)	Fy (ksi)	WELD A (E)
TP25.5X27.25X6X1	25.5	27.25	6	1	1	50	(5/8")
TP30X31X6X4	30	31	6	4	4	65	(1 1/4")
TP25.5X27.25X6X2	25.5	27.25	6	2	2	50	(5/8")

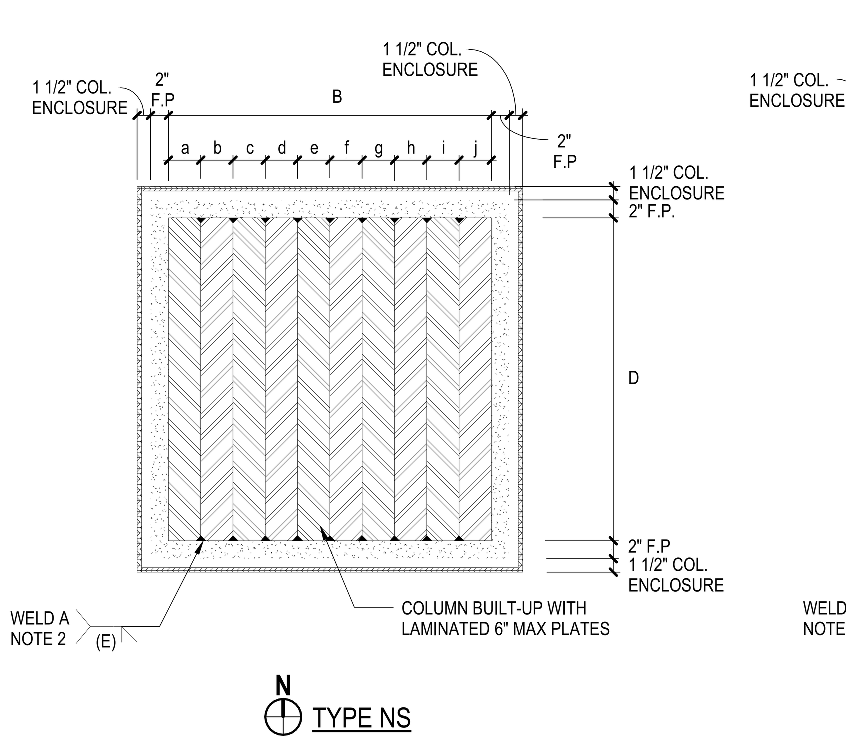

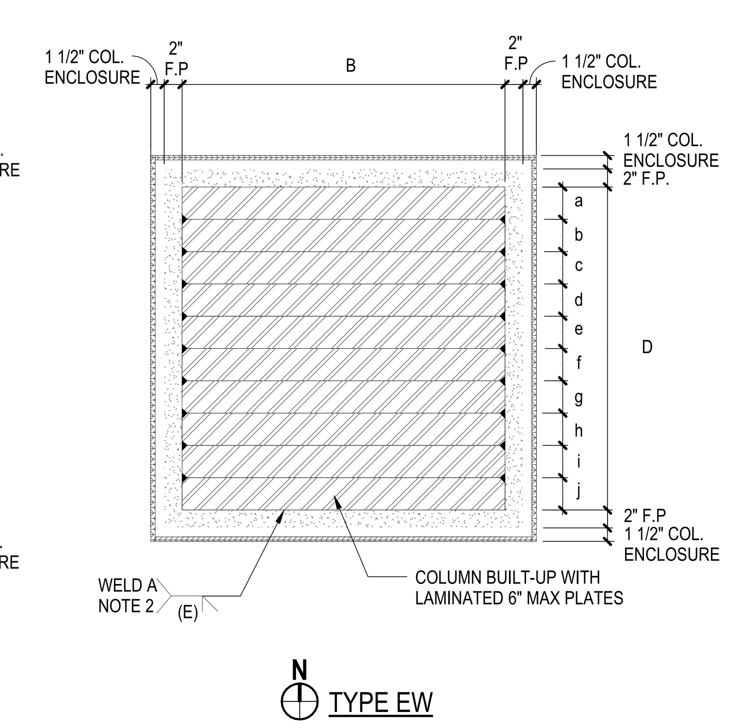

1 COLUMN TYPE BS - SOLID COLUMN WITH LAMINATED PLATES

1" = 1'-0"

NOTES:
1. COLUMN SPLICES ARE ANTICIPATED TO BE FIELD WELDED USING PARTIAL JOINT PENETRATION (PJP) WELDS. REFER TO SCHEDULE 5/S5-0002.
2. LONGITUDINAL WELDS TO BE INCREASED LOCALLY AS REQUIRED FOR CONNECTION DESIGN.
3. FOR LEVEL 1 TO 10 COLUMNS, REFER TO TABLE FOR LONGITUDINAL COLUMN WELD SIZES. FOR COLUMNS LEVEL 11 AND UP, REFER TO THE TABLE UNLESS AN ATYPICAL WELD SIZE IS NOTED EXPLICITLY ON THE COLUMN SCHEDULES.

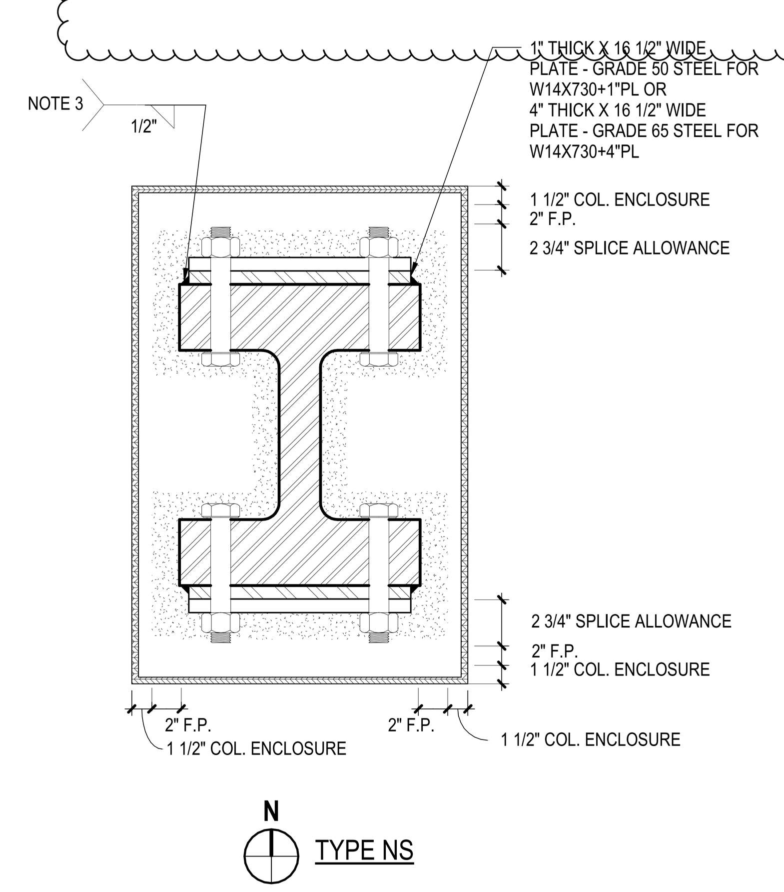

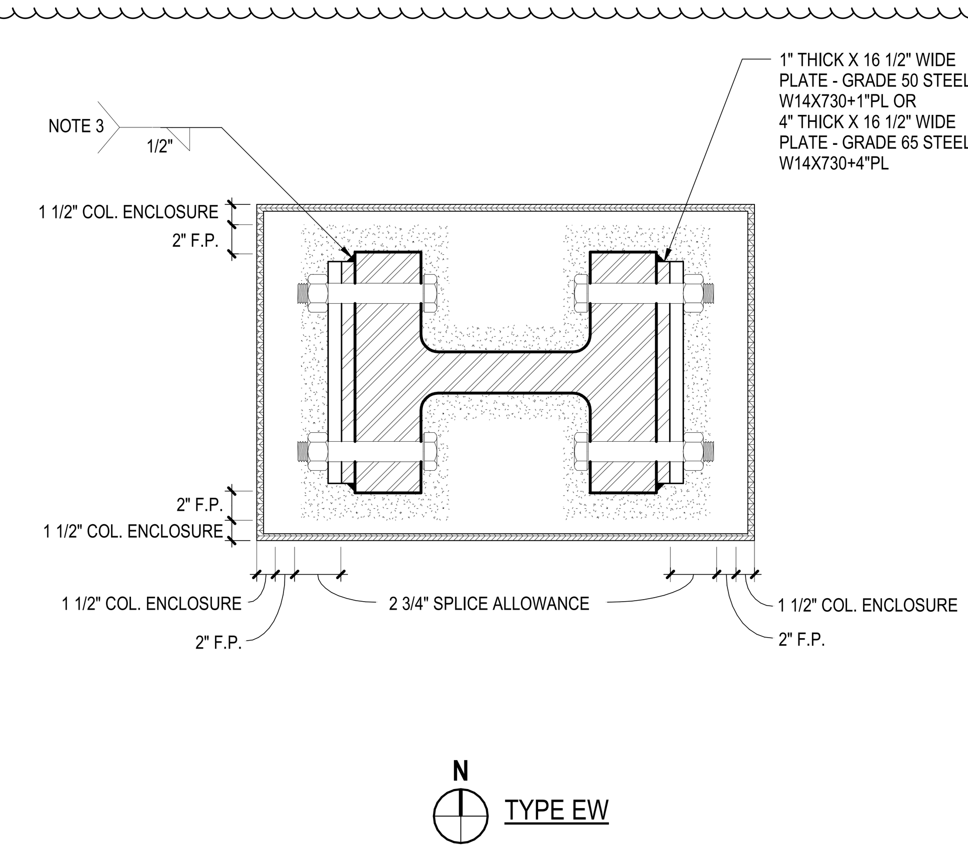

4. COLUMN TYPE W14X730 W/ PLATE

1 1/2" = 1'-0"

NOTES:
1. COLUMNS ARE NOTED AS "W14X730+1"PL" OR "W14X730+4"PL" IN COLUMN SCHEDULE.
2. COLUMN SPLICES ARE ANTICIPATED TO BE FIELD BOLTED. REFER TO SCHEDULE 5/S5-0002.
3. LONGITUDINAL WELDS TO BE INCREASED LOCALLY AS REQUIRED FOR CONNECTION DESIGN.

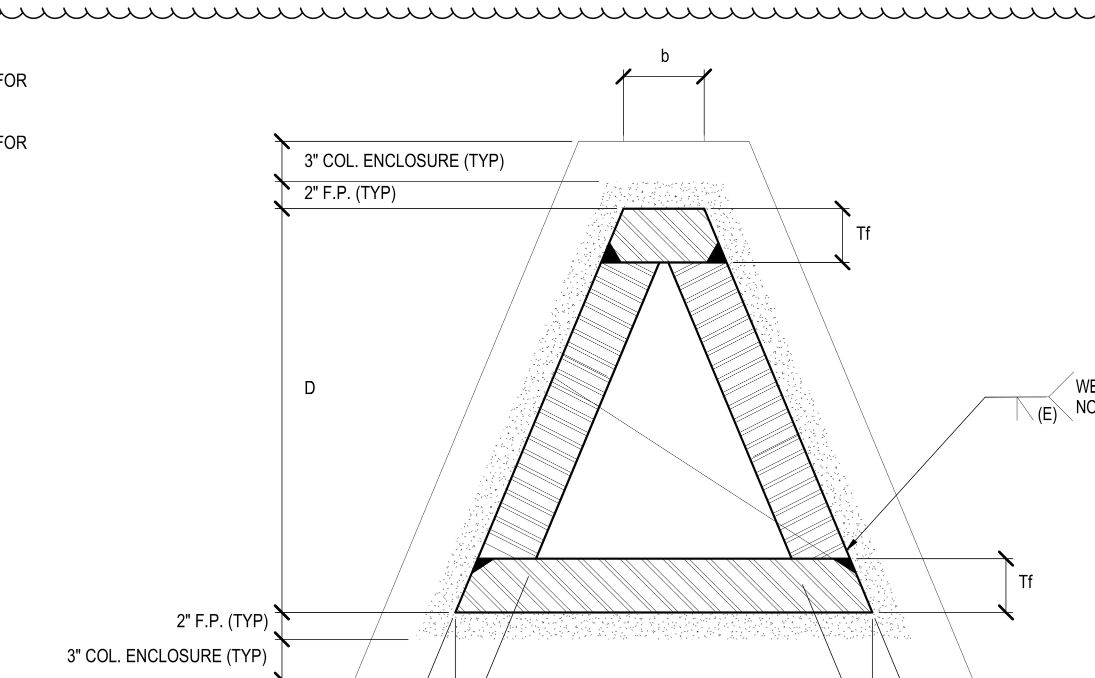

5. COLUMN TYPE TP - BUILT-UP TRAPEZOIDAL COLUMN

1 1/2" = 1'-0"

NOTES:
1. COLUMN SPLICES ARE ANTICIPATED TO BE FIELD WELDED.
2. WELDS TO BE E80XX FOR 65 KSI STEEL COLUMNS.

Damian Titus
APPROVED
Under Directive 2 of 1975
AMENDED APPLICATION
Date: 05/03/2017
NYC Development Hub

0 4' 8' 16'
N

HUDSON YARDS - RETAIL PODIUM AND TOWER A

500 WEST 33RD STREET
New York, NY

Client
Related Companies
60 Columbus Circle
New York, NY 10023
TEL: 212.801.1000 FAX: 212.801.1048

Oxford Properties Group
320 Park Avenue, 17th Floor
New York, NY 10022
TEL: 212.986.7514 FAX: 212.986.7510

Architect
Kohn Pedersen Fox Associates
11 West 42nd Street
New York, New York 10036
TEL: 212.977.6500 FAX: 212.956.2526

Structural Engineer
Thornton Tomasetti, Inc.
51 Madison Avenue
New York, New York 10010
TEL: 917.661.7800 FAX: 718.661.7801

Mechanical, Electrical, Plumbing, Fire Protection
Jaros Baum & Bolles Consulting Engineers
80 Pine Street
New York, NY 10013
TEL: 212.530.9300 FAX: 212.269.5894

Retail Interior Design & Planning
Elkus-Manfredi
300 A Street
Boston, MA 02210
TEL: 617.426.1300

No.	Description	Date
2	D.O.B. AMENDMENT #2	10/15/2016
1	D.O.B. BUILDING PERMIT FILING	12/10/2014

Key Plan

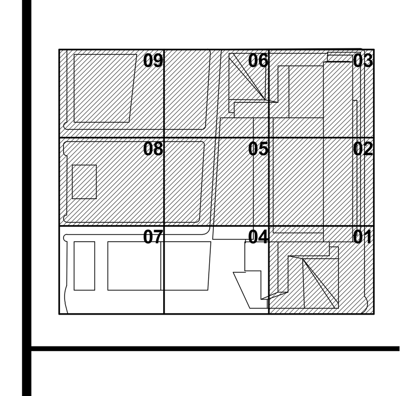

Issue Date: 12/10/2014
Project No. N11328.00
Drawn By Author
Sheet Number

STATE OF NEW YORK MICHAEL J. SQUARZINI LICENSED PROFESSIONAL ENGINEER

HYE -TA -S5-0001

Drawing Title

TYPICAL COLUMN TYPES

Drawing Number
S5-0001
B-Scan Drawing Number
S-700.01

© 2013 KOHN PEDERSEN FOX ASSOCIATES PC. All rights reserved.

S5-0001
10/17/2016 4:00:38 PM
TYPICAL COLUMN TYPES
P:\NY1\Projects\N11328.00\Drawings\Structural\Record\Issued\2016-10-16 - D.O.B. Amendment No.2\Revit - Rev. Removed\HYTA TYP detail_Col.Schedule.rvt

SKIDMORE OWINGS & MERRILL LLP
SKIDMORE OWINGS & MERRILL LLP
DEPT OF BLDGS ATTENDED Job Number
Bar Code
Scan Code

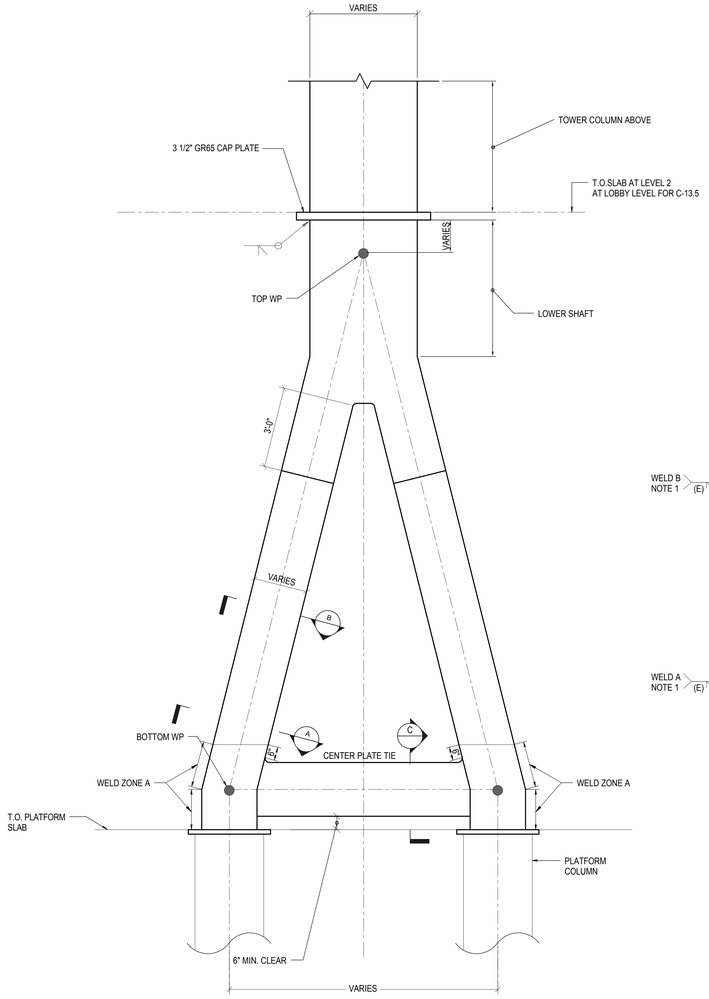

1 AFRAME DOUBLE COLUMN OPTION
NOT TO SCALE

DETAIL AT WELD ZONE C

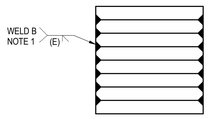

DETAIL AT WELD ZONE B

NOTE: THIS DETAIL APPLIES ALONG COLUMN SHAFT OUTSIDE OF WELD ZONE A

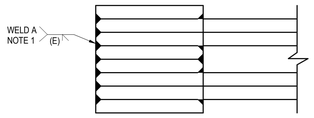

DETAIL AT WELD ZONE A

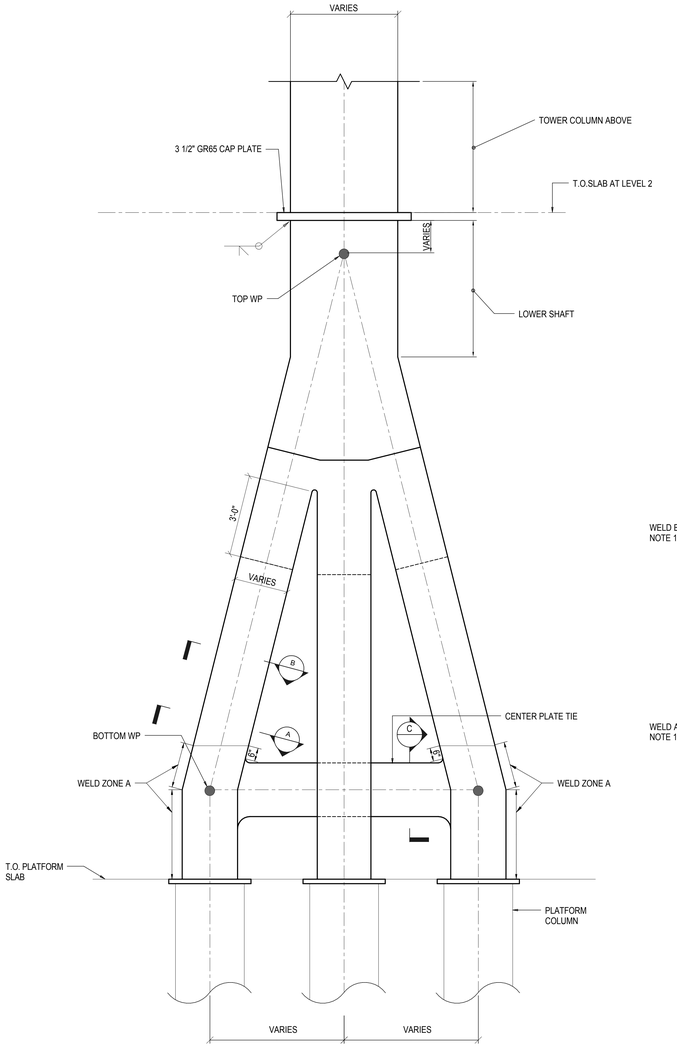

2 AFRAME TRIPLE COLUMN OPTION
NOT TO SCALE

DETAIL AT WELD ZONE C

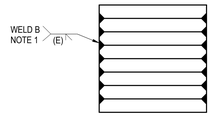

DETAIL AT WELD ZONE B

NOTE: THIS DETAIL APPLIES ALONG COLUMN SHAFT OUTSIDE OF WELD ZONE A

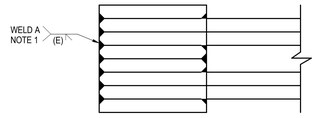

DETAIL AT WELD ZONE A

A FRAME COLUMN TABLE										COLUMN COORDINATES AT TOWER A BASE								
LOCATION REFERENCE	COLUMN SIZE					TOP WP ELEVATION	BOTTOM WP ELEVATION	TIE AXIAL TENSION FORCE (KIPS)	WELD A (E80XX)	WELD B (E80XX)	WEST LEG			CENTER LEG			EAST LEG		
	OUTER LEGS	INNER LEG	TIE	LOWER SHAFT	Fy						X (FT)	Y (FT)	ROTATION (DEG)	X (FT)	Y (FT)	ROTATION (DEG)	X (FT)	Y (FT)	ROTATION (DEG)
A.5/13.7	(2) 24"x18"		8"x10"	24"x28"	65 KSI	59'-3"	41'-5"	2550	(1 7/8")	(5/8")	445.86	553.13	0.00				455.86	553.13	
B/13.7	(2) 32"x24"		(2) 8"x10"	32"x32"	65 KSI	59'-6"	41'-5"	6450	(1 7/8")	(1 3/8")	475.86	553.13	0.00				485.86	553.13	
C/13.7	(2) 32"x26"		(2) 8"x18"	32"x32"	65 KSI	49'-4"	41'-9"	13150	(2 1/4")	(5/8")	505.86	553.13	0.00				515.86	553.13	
D/13.7	(2) 32"x20"		(2) 8"x10"	32"x32"	65 KSI	59'-6"	41'-5"	5000	(1 7/8")	(7/8")	535.86	553.13	0.00				545.86	553.13	
F/14	(2) 24"x26"	24"x26"	(2) 8"x10"	24"x40"	65 KSI	59'-3"	40'-9"	4500	(1 1/2")	(5/8")	595.37	567.09	1.27	600.87	566.97	1.27	606.36	566.85	1.27

NOTE:
1. LONGITUDINAL WELDS TO BE INCREASED LOCALLY AS REQUIRED FOR CONNECTION DESIGN.

TYPICAL WELDED DETAIL

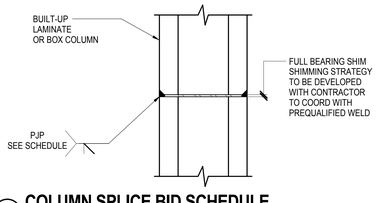

5 COLUMN SPLICE BID SCHEDULE
NOT TO SCALE

SPLICE TYPE	TYPE	APPROX. SIZE
BS-1	BOLTED	5 ROWS, DOUBLE GAGE, SINGLE SHEAR
BS-2	BOLTED	5 ROWS, DOUBLE GAGE, DOUBLE SHEAR
BS-3	BOLTED	UP TO 9 ROWS, DOUBLE GAGE, DOUBLE SHEAR
WS-1	WELDED	5/8" TO 1" PJP
WS-2	WELDED	1 1/4" TO 1 1/2" PJP
WS-3	WELDED	1 3/4" TO 2" PJP
WS-4	WELDED	2 1/4" TO 2 1/2" PJP
WS-5	WELDED	2 3/4" TO 3" PJP
WS-6	WELDED	3 1/4" TO 3 1/2" PJP
WS-7	WELDED	3 1/4" TO 4" PJP

NOTES:
1. THIS SCHEDULE APPLIES FOR ALL TOWER A COLUMNS NORTH OF GRID LINE 13. REFER TO COLUMN SCHEDULE FOR CALL-OUTS.
2. SPLICE LOCATIONS ARE PRELIMINARY AND ARE TO BE VERIFIED/PROVIDED BY THE STEEL SUBCONTRACTOR.

COLUMN CAMBER SCHEDULE		
COLUMN	LEVEL	VERTICAL ADJUSTMENT
K-16	11	+1/16"
K-16	13	+1/16"
K-16	15	+1/16"
K-16	17	+1/16"
K-16	19	+1/16"

6 COLUMN CAMBER SCHEDULE
NOT TO SCALE

Damian Titus
Buildings
APPROVED
Under Directive 2 of 1975
AMENDED APPLICATION
Date: 05/03/2017
NYC Development Hub

0 4' 8' 16'

N

HUDSON YARDS - RETAIL PODIUM AND TOWER A

500 WEST 33RD STREET
New York, NY

Client
Related Companies
60 Columbus Circle
New York, NY 10023
TEL: 212.801.1000 FAX: 212.801.1048

Oxford Properties Group
320 Park Avenue, 17th Floor
New York, NY 10022
TEL: 212.986.7514 FAX: 212.986.7510

Architect
Kohn Pedersen Fox Associates
11 West 42nd Street
New York, New York 10036
TEL: 212.977.6500 FAX: 212.956.2526

Structural Engineer
Thornton Tomasetti, Inc.
51 Madison Avenue
New York, New York 10010
TEL: 917.661.7800 FAX: 718.661.7801

Mechanical, Electrical, Plumbing, Fire Protection
Jaros Baum & Bolles Consulting Engineers
80 Pine Street
New York, NY 10013
TEL: 212.530.9300 FAX: 212.269.5894

Retail Interior Design & Planning
Elkus-Manfredi
300 A Street
Boston, MA 02210
TEL: 617.426.1300

No.	Description	Date
2	D.O.B. AMENDMENT #2	10/15/2016
1	D.O.B. BUILDING PERMIT FILING	12/10/2014

Key Plan

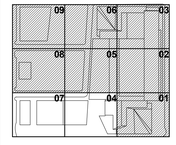

Issue Date: 12/10/2014
Project No. N11328.00
Drawn By: Author
Sheet Number

HYE -TA -S5-0002

Drawing Title

TYPICAL COLUMN TYPES

Drawing Number
S5-0002
B-Scan Drawing Number
S-701.01

SHEET 347 OF 443

© 2013 KOHN PEDERSEN FOX ASSOCIATES PC. All rights reserved.

S5-0002
10/17/2016 4:00:42 PM
TYPICAL COLUMN TYPES
P:\NY\Projects\N11328.00\Drawings\Structural\Record\Issued\2016-10-16 - D.O.B. Amendment No.2\Revit - Rev. Removed\HYTA TYP detail_Col Schedule.rvt

LEVEL	N-S GL	E-W GL	MIN WELD SIZE NEEDED AT CONNECTION ZONE	WELD TYPE
21	13.2	B	1"1/8	PJP
21	13.2	C	1"1/8	PJP
21	13.2	D	1"1/8	PJP
21	13.2	E	1"1/8	PJP
21	13.2	F	1"1/8	PJP
21	13.2	G	1"1/8	PJP
21	13.2	H	1"1/8	PJP
21	2S	A	1"1/2	PJP
21	14	B	1"1/8	PJP
21	14	C	1"1/8	PJP
21	14	D	1"1/8	PJP
21	14	E	1"1/8	PJP
21	14	F	1"1/8	PJP
21	14	G	1"1/8	PJP
21	14.6	HS	1"1/8	PJP
21	15	B	1"1/8	PJP
21	15	C.1	1"1/8	PJP
21	15	C.9	1"3/8	PJP
21	15	D.8	1"1/8	PJP
21	15	E.8	1"1/8	PJP
21	15	F.9	1"1/8	PJP
21	15	J	1"1/2	PJP
21	15.2	A	1"1/8	PJP
21	15.7	HS	1"1/8	PJP
21	15.95	A	1"1/8	PJP
21	16	B	1"1/4	PJP
21	16	C.1	1"1/8	PJP
21	16	C.9	1"1/8	PJP
21	16	D.8	1"1/8	PJP
21	16	E.8	1"1/8	PJP
21	16	F.9	1"1/8	PJP
21	16	H.8	1"1/8	PJP
21	3S	A	1"1/8	PJP
21	17	AS	1"1/8	PJP
21	17	B	1"1/8	PJP
21	17	C.1	1"1/8	PJP
21	17	C.9	1"1/8	PJP
21	17	D.8	1"1/8	PJP
21	17	E.8	1"1/8	PJP
21	17	F.9	1"1/8	PJP

LEVEL 21

LEVEL	N-S GL	E-W GL	MIN WELD SIZE NEEDED AT CONNECTION ZONE	WELD TYPE
22	13.2	B	1"1/8	PJP
22	13.2	C	1"1/8	PJP
22	13.2	D	1"1/8	PJP
22	13.2	E	1"1/8	PJP
22	13.2	F	1"1/8	PJP
22	13.2	G	1"1/8	PJP
22	13.2	H	1"1/8	PJP
22	2S	A	1"1/8	PJP
22	14	B	1"1/8	PJP
22	14	C.1	1"1/8	PJP
22	14	D.1	1"1/8	PJP
22	14	E.1	1"1/8	PJP
22	14	F.6	1"1/8	PJP
22	14	A.9S	1"1/8	PJP
22	14	FS	1"1/8	PJP
22	14	J	1"1/8	PJP
22	14.6	FS	1"1/8	PJP
22	15	A	1"1/8	PJP
22	15	B	1"1/8	PJP
22	15	C.1	1"1/8	PJP
22	15	D.1	1"1/8	PJP
22	15	F.6	1"1/8	PJP
22	15	H	1"1/8	PJP
22	15	J	1"1/8	PJP
22	15.2	A	1"1/8	PJP
22	15.95	A	1"1/8	PJP
22	16	B	1"1/8	PJP
22	16	C.1	1"1/8	PJP
22	16	C.9	1"1/8	PJP
22	16	D.8	1"1/8	PJP
22	16	E.8	1"1/8	PJP
22	16	F.9	1"1/8	PJP
22	16	G.6	1"1/8	PJP
22	16	H.8	1"1/8	PJP
22	3S	A	1"1/8	PJP
22	17	AS	1"1/8	PJP
22	17	B	1"1/2	PJP
22	17	C	1"1/8	PJP
22	17	C.9	1"1/8	PJP
22	17	E	1"1/8	PJP
22	17	F.9	1"1/8	PJP

LEVEL 22

LEVEL	N-S GL	E-W GL	MIN WELD SIZE NEEDED AT CONNECTION ZONE	WELD TYPE
34	14	F.6	1"1/4	PJP
33	14	F.6	1"1/4	PJP
32	14	F.6	1"1/4	PJP
31	14	F.6	1"1/4	PJP
38	14	E.1	1"3/8	PJP
34	14	E.1	1"3/8	PJP
33	14	E.1	1"3/8	PJP
32	14	E.1	1"3/8	PJP
31	14	E.1	1"3/8	PJP
38	14	D.1	1"1/4	PJP
38	14	C.1	1"3/8	PJP
34	14	C.1	1"3/8	PJP
33	14	C.1	1"3/8	PJP
32	14	C.1	1"3/8	PJP
31	14	C.1	1"3/8	PJP
30	14	C.1	1"3/8	PJP
29	14	C.1	1"3/8	PJP
28	14	C.1	1"3/8	PJP
27	14	C.1	1"3/8	PJP
26	14	C.1	1"3/8	PJP
25	14	C.1	2"1/8	PJP
24	14	C.1	1"3/8	PJP
23	14	C.1	1"3/8	PJP
26	14	D.1	1"3/8	PJP
25	14	D.1	2"1/8	PJP
25	14	E.1	2"1/8	PJP
25	14	F.6	2"	PJP
24	14	F.6	2"1/8	PJP
23	14	F.6	2"1/8	PJP
38	15	B	2"1/8	PJP
37	15	B	2"1/8	PJP
36	15	B	2"1/8	PJP
35	15	B	2"1/8	PJP
34	15	B	2"1/8	PJP
33	15	B	2"1/8	PJP
32	15	B	2"1/8	PJP
31	15	B	2"1/8	PJP
24	15	F.6	1"1/4	PJP
24	16	F.6	2"3/16	PJP
23	16	E.8	3"	PJP
23	16	D.8	1"7/8	PJP

LEVEL 23-38

NOTES:
1) WELD SIZES GIVEN HERE ARE THE MINIMUM LONGITUDINAL WELD SIZES AT CONNECTION ZONES. REFER TO SPECIFIC CONNECTION DETAIL IF ANY UPGRADE IS NEEDED ON THE BASE WELD SIZE FOR CONNECTION PURPOSES.

1 MINIMUM LONGITUDINAL WELD SIZES AT CONNECTION ZONES

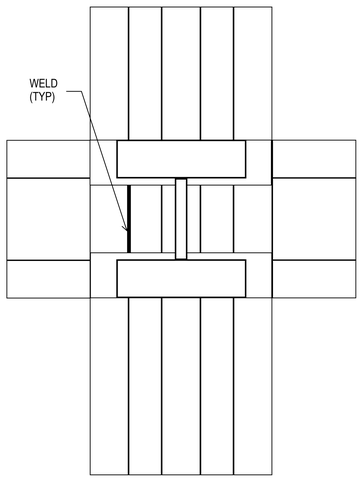

THROUGH-PLATED COLUMN

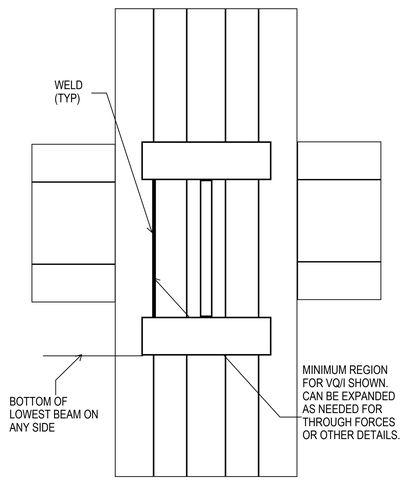

OTHER

2 WELD EXTENT FOR MINIMUM LONGITUDINAL WELD SIZES AT CONNECTION ZONES

HUDSON YARDS - RETAIL PODIUM AND TOWER A
500 WEST 33RD STREET
New York, NY

Client
Related Companies
60 Columbus Circle
New York, NY 10023
TEL: 212.801.1000 FAX: 212.801.1048

Oxford Properties Group
320 Park Avenue, 17th Floor
New York, NY 10022
TEL: 212.986.7514 FAX: 212.986.7510

Architect
Kohn Pedersen Fox Associates
11 West 42nd Street
New York, New York 10036
TEL: 212.977.6500 FAX: 212.956.2526

Structural Engineer
Thornton Tomasetti, Inc.
51 Madison Avenue
New York, New York 10010
TEL: 917.661.7800 FAX: 718.661.7801

Mechanical, Electrical, Plumbing, Fire Protection
Jaros Baum & Bolles Consulting Engineers
80 Pine Street
New York, NY 10013
TEL: 212.530.9300 FAX: 212.269.5894

Retail Interior Design & Planning
Elkus-Manfredi
300 A Street
Boston, MA 02210
TEL: 617.426.1300

No	Description	Date
1	D.O.B AMENDMENT #2	10/15/2016

Key Plan

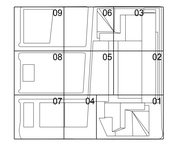

Issue Date 10/15/2016
Project No. N11328.00
Drawn By
Sheet Number

HYE-TA-S5-0003
Drawing Title

Damian Titus
Buildings
APPROVED
Under Directive 2 of 1975
MUNICIPAL REGULATION
Date: 05/03/2017
NYC Development Hub

MINIMUM COLUMN LONGITUDINAL WELDS AT CONNECTION ZONES

Drawing Number
S5-0003
Revision Drawing Number
S-702.00

© 2013 KOHN PEDERSEN FOX ASSOCIATES PC. All rights reserved.

FLOOR \ COLUMN MARK	M-9	M.9-9	A.5-9.4	A.A-9.5	A.5-10	A.8-10	C-10	D-10	E-10	F-10	G-10	H-10
PD ROOF												
FLOOR 11												
FLOOR 10								NOTE 7	NOTE 7	NOTE 7	NOTE 7	NOTE 7
FLOOR 9							-1600 -700 --- GR 65 W14X500	1300 500 --- GR 65 W14X665	-1800 -500 --- GR 65 W14X500	1500 500 --- GR 65 W14X665	1000 400 --- GR 65 W14X398	1200 400 --- GR 65 W14X730
FLOOR 8	NOTE 7						-1500 -600 --- GR 65 W14X500 SPLICE	1400 600 --- GR 65 W14X665 SPLICE	-1600 -400 --- GR 65 W14X500 SPLICE	1700 700 --- GR 65 W14X665 SPLICE	1200 500 --- GR 65 W14X398 SPLICE	1300 600 --- GR 65 W14X730 SPLICE
FLOOR 6U / 7	500 300 --- W14X283 SPLICE	200 100 --- W14X283 SPLICE				700 100 --- W14X370	-1400 -400 --- W14X550 SPLICE	1600 800 --- W14X665 SPLICE	-1400 -200 --- W14X500	1800 800 --- W14X665 SPLICE	1400 700 --- W14X398 SPLICE	1500 700 --- W14X730 SPLICE
FLOOR 6	600 400 --- W14X283	300 100 --- W14X283				900 100 --- W14X370	-1200 -400 --- W14X605	1900 800 --- W14X665	-1200 -200 --- W14X500	2100 900 --- W14X665	1900 800 --- W14X455	2000 800 --- W14X730
FLOOR 5	700 400 --- W14X283 SPLICE	300 100 --- W14X283 SPLICE		600 100 --- W14X455	400 100 --- W14X283 SPLICE	1200 300 --- W14X370 SPLICE	-1100 -200 --- W14X605 SPLICE	2000 1000 --- W14X665 SPLICE	SPLICE -1000 -100 W14X500	2200 900 --- W14X665 SPLICE	2000 800 --- W14X455 SPLICE	2200 900 --- W14X730 SPLICE
FLOOR 4	800 400 --- W14X283	400 100 --- W14X283	100 100 --- W14X283	700 200 --- W14X455	500 200 --- W14X283	1300 400 --- W14X370	-900 -200 --- W14X605	2100 1000 --- W14X665	-900 -100 --- W14X500 SPLICE	2400 1000 --- W14X665	2100 900 --- W14X455	2300 900 --- W14X730
FLOOR 3	900 500 --- W14X283 SPLICE	500 200 --- W14X283 SPLICE	100 100 --- W14X283 SPLICE	800 200 --- W14X455 SPLICE	500 300 --- W14X283 SPLICE	1500 500 --- W14X370 SPLICE	-800 -100 --- W14X605 SPLICE	2300 1000 --- W14X665 SPLICE	-800 -100 --- W14X500	2500 1000 --- W14X665 SPLICE	2300 900 --- W14X455 SPLICE	2400 1000 --- W14X730 SPLICE
FLOOR 2	1100 500 --- W14X283	600 200 --- W14X283	200 100 --- W14X283	900 200 --- W14X550	600 300 --- W14X283	1600 500 --- W14X370	-700 -100 --- W14X665	2400 1100 --- W14X730	-700 -100 --- W14X500	2600 1100 --- W14X665	2400 1000 --- W14X550	2500 1000 --- W14X730
FLOOR 1 / 1L	1200 500 --- W14X283 SPLICE	700 200 --- W14X283 SPLICE	200 200 --- W14X283 SPLICE	1000 300 --- W14X550 SPLICE	700 400 --- W14X283 SPLICE	1700 600 --- W14X370 SPLICE	-500 -100 --- W14X665 SPLICE	2500 1100 --- W14X730 SPLICE	-500 -100 --- W14X500 SPLICE	2700 1100 --- W14X665 SPLICE	2500 1000 --- W14X550 SPLICE	2700 1000 --- W14X730 SPLICE
LOADING DOCK												
B/COLUMN ELEV.												
X (FT) [8]												
Y (FT) [8]												
ROTATION (DEG)												

FLOOR \ COLUMN MARK	J-10	K-10	L-10	M-10	M.9-10	A.A-10.7	M-11	M.9-11	A.5-11.8	B-11.8	C-11.8	D-11.8
PD ROOF												
FLOOR 11												
FLOOR 10	NOTE 7	NOTE 7	NOTE 7	NOTE 7								
FLOOR 9	-2100 -1100 --- GR 65 W14X665	1800 700 --- GR 65 W14X730	1500 700 --- GR 65 W14X550	700 400 --- GR 65 W14X500			-900 -600 --- GR 65 W14X370			-2100 -600 --- GR 65 W14X370	-1700 -700 --- GR 65 W14X370	-1700 -700 --- GR 65 W14X370
FLOOR 8	-2000 -1000 --- GR 65 W14X665 SPLICE	1900 800 --- GR 65 W14X730 SPLICE	1600 800 --- GR 65 W14X550 SPLICE	800 500 --- GR 65 W14X500 SPLICE			-800 -500 --- GR 65 W14X370 SPLICE			-1900 -500 --- GR 65 W14X370 SPLICE	-1600 -600 --- GR 65 W14X370 SPLICE	-1600 -600 --- GR 65 W14X370 SPLICE
FLOOR 6U / 7	-1800 -800 --- W14X342 SPLICE	2100 1000 --- W14X730 SPLICE	1700 1000 --- W14X550 SPLICE	900 600 --- W14X500 SPLICE	200 100 --- W14X283 SPLICE		-700 -400 --- W14X283 SPLICE	200 100 --- W14X283 SPLICE	500 0 --- W14X283 SPLICE	-1700 -400 --- W14X283	-1400 -400 --- W14X283	-1400 -400 --- W14X283
FLOOR 6	-1300 -700 --- W14X342	2700 1100 --- W14X730 SPLICE	2000 1100 --- W14X550 SPLICE	1000 600 --- W14X500	400 200 --- W14X283		-600 -400 --- W14X283	400 200 --- W14X283	500 100 --- W14X283	-1600 -300 --- W14X283	-1300 -400 --- W14X283	-1300 -400 --- W14X283
FLOOR 5	-1200 -700 --- W14X342 SPLICE	2800 1100 --- W14X730 SPLICE	2200 1100 --- W14X550 SPLICE	1100 700 --- W14X500 SPLICE	500 200 --- W14X283 SPLICE	300 100 --- W14X311	-500 -300 --- W14X283 SPLICE	400 200 --- W14X283 SPLICE	600 200 --- W14X283 SPLICE	SPLICE -200 0 W14X283	SPLICE -300 0 W14X283	SPLICE -300 0 W14X283
FLOOR 4	-1000 -600 --- W14X283	6100 2300 0 BW24.625X22X6X4-A NS 100'-9 1/2"	4800 2100 0 BB24X28X4.5X8 EW 100'-9 1/2"	1200 700 --- W14X500	500 200 --- W14X283	400 200 --- W14X311	-500 -300 --- W14X283	500 200 --- W14X283	800 300 --- W14X283	-1200 -200 --- W14X283 SPLICE	-1000 -200 --- W14X283 SPLICE	-1000 -200 --- W14X283 SPLICE
FLOOR 3	-900 -600 --- W14X283 SPLICE	6200 2300 0 BB24X28X6X8 EW SPLICE 82'-9 1/2"	5000 2200 0 BB24X28X6X10 EW SPLICE	1400 800 --- W14X500 SPLICE	400 200 --- W14X283 SPLICE	500 200 --- W14X311 SPLICE	-200 -100 --- W14X283 SPLICE	400 200 --- W14X283 SPLICE	900 400 --- W14X283 SPLICE	-1000 -100 --- W14X283	-900 -100 --- W14X283	-900 -100 --- W14X283
FLOOR 2	-800 -500 --- W14X283	6400 2400 0 BB24X28X6X8 EW	5100 2300 0 BB24X28X6X10 EW 64'-9 1/2"	1500 900 --- W14X500	500 200 --- W14X283	600 300 --- W14X283	-100 -100 --- W14X283	400 200 --- W14X283	1100 400 --- W14X311	-900 -100 --- W14X283	-700 -100 --- W14X283	-700 -100 --- W14X283
FLOOR 1 / 1L	-600 -500 --- W14X283 SPLICE	6500 2400 0 BB24X28X6X8 EW	5300 2300 0 BB24X28X6X10 EW	1600 900 --- W14X500 SPLICE	800 300 --- W14X283 SPLICE	700 300 --- W14X283 SPLICE			1300 500 --- W14X311 SPLICE	-700 -100 --- W14X283 SPLICE	-600 -100 --- W14X283 SPLICE	-600 -100 --- W14X283 SPLICE
LOADING DOCK												
B/COLUMN ELEV.		40'-2"	40'-2"									
X (FT) [8]												
Y (FT) [8]												
ROTATION (DEG)												

FLOOR \ COLUMN MARK	E-11.8	F-11.8	G-11.8	H-11.8	J-11.8	K-11.8	L-11.8	A.A-11.92	G-12	M-12	M.9-12
PD ROOF											
FLOOR 11											
FLOOR 10											
FLOOR 9	-1700 -600 --- GR 65 W14X398	-2100 -700 --- GR 65 W14X426	-2200 -600 --- GR 65 W14X370	-2200 -700 --- GR 65 W14X370	-2300 -700 --- GR 65 W14X398	-1700 -700 --- GR 65 W14X370	-1000 -700 --- W14X311			700 300 --- W14X342	
FLOOR 8	-1600 -400 --- GR 65 W14X398 SPLICE	-1900 -500 --- GR 65 W14X426 SPLICE	-2000 -500 --- GR 65 W14X370 SPLICE	-2100 -600 --- GR 65 W14X370 SPLICE	-2100 -600 --- GR 65 W14X398 SPLICE	-1500 -600 --- GR 65 W14X370 SPLICE	-900 -600 --- W14X311 SPLICE			800 400 --- W14X342 SPLICE	
FLOOR 6U / 7	-1400 -200 --- W14X283	-1700 -300 --- W14X283	-1800 -300 --- W14X370 SPLICE	-1900 -400 --- W14X370 SPLICE	-2000 -400 --- W14X311 SPLICE	-1400 -400 --- W14X283 SPLICE	-800 -500 --- W14X283 SPLICE			900 500 --- W14X342 SPLICE	200 100 --- W14X283 SPLICE
FLOOR 6	-1300 -200 --- W14X283	-1300 -200 --- W14X283	-1000 -200 --- W14X370	-1000 -300 --- W14X370	-1100 -300 --- W14X311	-600 -300 --- W14X283	-600 -400 --- W14X283			1000 500 --- W14X342	400 200 --- W14X283
FLOOR 5	SPLICE -200 0 W14X283	SPLICE -200 0 W14X283	SPLICE -100 --- W14X370 SPLICE	-900 -200 --- W14X370 SPLICE	-1000 -200 --- W14X311 SPLICE	-500 -300 --- W14X283 SPLICE	-500 -300 --- W14X283 SPLICE	300 100 --- W14X283		1100 500 --- W14X342 SPLICE	500 200 --- W14X283 SPLICE
FLOOR 4	-1000 -100 --- W14X283 SPLICE	-1000 -100 --- W14X283 SPLICE	-700 -100 --- W14X370	-800 -200 --- W14X370	-800 -200 --- W14X283	-400 -200 --- W14X283	-400 -300 --- W14X283	400 200 --- W14X283	4900 1400 0 BW24.625X24X6X4-A NS 100'-9 1/2"	5800 2100 0 BS28X24 NS 95'-9 1/2"	600 300 --- W14X283
FLOOR 3	-900 -100 --- W14X283	-900 -100 --- W14X283	-600 -100 --- W14X370 SPLICE	-700 -100 --- W14X370 SPLICE	-700 -100 --- W14X283 SPLICE	-300 -100 --- W14X283 SPLICE	-300 -200 --- W14X283 SPLICE	500 200 --- W14X283 SPLICE	5000 1500 0 BB24X28X5.5X8 EW SPLICE 82'-9 1/2"	6000 2100 0 BS28X24 NS SPLICE 82'-9 1/2"	800 300 --- W14X283 SPLICE
FLOOR 2	-700 -100 --- W14X283	-700 -100 --- W14X283	-500 -100 --- W14X370	-600 -100 --- W14X370	-600 -100 --- W14X283	-200 -100 --- W14X283	-200 -100 --- W14X283	600 300 --- W14X283	5100 1500 0 BB24X28X5.5X8 EW	6200 2200 0 BS28X24 NS 64'-9 1/2"	900 400 --- W14X283
FLOOR 1 / 1L	-600 -100 --- W14X283 SPLICE	-600 -100 --- W14X283 SPLICE	-400 -100 --- W14X370 SPLICE	-500 -100 --- W14X370 SPLICE	-500 -100 --- W14X283 SPLICE			700 300 --- W14X283 SPLICE	5200 1500 0 BB24X28X5.5X8 EW	6300 2200 0 BS28X24-A NS WS-1	1300 500 --- W14X283 SPLICE
LOADING DOCK											
B/COLUMN ELEV.									40'-2"	40'-2"	
X (FT) [8]											
Y (FT) [8]											
ROTATION (DEG)											

TYPICAL COLUMN SCHEDULE NOTES:
1. FOR TOP OF STRUCTURAL SLAB ELEVATIONS SEE PLANS.
2. FOR TYPICAL COLUMN TYPE DETAILS SEE S5-0001.
3. "SPLICE" INDICATES COLUMN SPLICE.
4. FOR BASE PLATE SIZE BxNxt, WIDTH 'B' IS ORIENTED PARALLEL TO COLUMN FLANGE AND LENGTH 'N' IS ORIENTED PARALLEL TO COLUMN WEB. FOR RECTANGULAR AND ROUND HSS COLUMNS, WIDTH 'B' IS ORIENTED PARALLEL TO XXX AND LENGTH 'N' IS ORIENTED PARALLEL TO YYY.
5. FOR BOTTOM OF BASE PLATE ELEVATION REFER TO TYPICAL ANCHOR ROD DETAIL.
6. COLUMN LOADS SHOWN ON SCHEDULE ARE AS FOLLOWS:
   XXX = SERVICE AXIAL DEAD LOAD IN KIPS
   XXX = SERVICE AXIAL LIVE LOAD IN KIPS
   XXX = SERVICE UPLIFT FORCE IN KIPS
7. REFER TO S2-4050 SERIES FOR COLUMNS ABOVE WHERE NOTED.
8. COORDINATES FOR OFF-GRID TOWER A COLUMNS ARE GIVEN IN THE SCHEDULE. COLUMN COORDINATES ARE BASED OFF OF A LOCAL COORDINATE SYSTEM WHERE (0,0) IS LOCATED AT THE INTERSECTION OF THE 11TH AVE AND WEST 30TH STREET PROPERTY LINE. THE MANHATTAN BOROUGH GRID THAT RELATES TO LOCAL (0,0) IS (N 19196.576, E-15007.646).

DEPT OF BLDGS 121186251 Job Number
ES466603991 Scan Code

HUDSON YARDS - RETAIL PODIUM AND TOWER A

500 WEST 33RD STREET
New York, NY

Client
Related Companies
60 Columbus Circle
New York, NY 10023
TEL: 212.801.1000 FAX: 212.801.1048

Oxford Properties Group
320 Park Avenue, 17th Floor
New York, NY 10022
TEL: 212.986.7514 FAX: 212.986.7510

Architect
Kohn Pedersen Fox Associates
11 West 42nd Street
New York, New York 10036
TEL: 212.977.6500 FAX: 212.956.2526

Structural Engineer
Thornton Tomasetti, Inc.
51 Madison Avenue
New York, New York 10010
TEL: 917.661.7800 FAX: 718.661.7801

Mechanical, Electrical, Plumbing, Fire Protection
Jaros Baum & Bolles Consulting Engineers
80 Pine Street
New York, NY 10013
TEL: 212.530.9300 FAX: 212.269.5894

Retail Interior Design & Planning
Elkus-Manfredi
300 A Street
Boston, MA 02210
TEL: 617.426.1300

No.	Description	Date
2	D.O.B. AMENDMENT #2	10/15/2016
1	D.O.B. BUILDING PERMIT FILING	12/10/2014

Key Plan

09 06 03
08 05 02
07 04 01

Issue Date: 12/10/2014
Project No. N11328.00
Drawn By: Author
Sheet Number: HYE -TA -S5-1004

STATE OF NEW YORK · MICHAEL J. SQUARZINI · LICENSED PROFESSIONAL ENGINEER · No. 080340

Damian Titus
Buildings
APPROVED
Under Directive 2 of 1975
AMENDED APPLICATION
Date: 05/03/2017
NYC Development Hub

0 4' 8' 16'
N

Drawing Title
COLUMN SCHEDULE IV BELOW 9TH FLOOR

Drawing Number
S5-1004
B-Scan Drawing Number
S-713.01
SHEET 349 OF 443

© 2013 KOHN PEDERSEN FOX ASSOCIATES PC. All rights reserved.

S5-1004
10/17/2016 4:00:55 PM
COLUMN SCHEDULE IV BELOW 9TH FLOOR
P:\NY1\Projects\N11328.00\Drawings\Structural\Record\Issued\2016-10-16 - D.O.B. Amendment No.2\Revit - Rev. Removed\HYTA TYP detail_Col.Schedule.rvt

DEPT OF BLDGS 121186251 Job Number
ES815171808 Scan Code

TYPICAL COLUMN SCHEDULE NOTES:
1. FOR TOP OF STRUCTURAL SLAB ELEVATIONS SEE PLANS.
2. FOR TYPICAL COLUMN TYPE DETAILS SEE S5-0001.
3. "SPLICE" INDICATES COLUMN SPLICE.
4. FOR BASE PLATE SIZE BxNxt, WIDTH 'B' IS ORIENTED PARALLEL TO COLUMN FLANGE AND LENGTH 'N' IS ORIENTED PARALLEL TO COLUMN WEB. FOR RECTANGULAR AND ROUND HSS COLUMNS, WIDTH 'B' IS ORIENTED PARALLEL TO XXX AND LENGTH 'N' IS ORIENTED PARALLEL TO YYY.
5. FOR BOTTOM OF BASE PLATE ELEVATION REFER TO TYPICAL ANCHOR ROD DETAIL.
6. COLUMN LOADS SHOWN ON SCHEDULE ARE AS FOLLOWS:
   XXX = SERVICE AXIAL DEAD LOAD IN KIPS
   XXX = SERVICE AXIAL LIVE LOAD IN KIPS
   XXX = SERVICE UPLIFT FORCE IN KIPS
7. REFER TO S2-4050 SERIES FOR COLUMNS ABOVE WHERE NOTED.
8. COORDINATES FOR OFF-GRID TOWER A COLUMNS ARE GIVEN IN THE SCHEDULE. COLUMN COORDINATES ARE BASED OFF OF A LOCAL COORDINATE SYSTEM WHERE (0,0) IS LOCATED AT THE INTERSECTION OF THE 11TH AVE AND WEST 30TH STREET PROPERTY LINE. THE MANHATTAN BOROUGH GRID THAT RELATES TO LOCAL (0,0) IS (N 19196.576, E-15007.646).

FLOOR \ COLUMN MARK	L-12.1	H-12.2	K-12.3	J-12.4	A.5-13	B-13	C-13	D-13	E-13	F-13
PD ROOF										
FLOOR 11										
FLOOR 10	-2400 -1200 --- GR 65 W14X500		-2000 -1200 --- GR 65 W14X398			-1400 -400 --- GR 65 W14X730	-1200 -500 --- GR 65 W14X605	-1200 -500 --- GR 65 W14X605	-1300 -400 --- GR 65 W14X730	-1500 -400 --- GR 65 W14X605
FLOOR 9	-2300 -1100 --- GR 65 W14X500		-1900 -1100 --- GR 65 W14X398			-1300 -300 --- GR 65 W14X730	-1100 -400 --- GR 65 W14X605	-1100 -400 --- GR 65 W14X605	-1200 -300 --- GR 65 W14X730	-1400 -400 --- GR 65 W14X605
FLOOR 8	SPLICE -2100 -1000 --- W14X426		SPLICE -1700 -1000 --- W14X370		300 100 --- W14X283	SPLICE -1200 -300 --- W14X283	SPLICE -1000 -300 --- W14X283	SPLICE -1100 -300 --- W14X283	SPLICE -1100 -200 --- W14X283	SPLICE -1300 -300 --- W14X283
FLOOR 6U / 7	SPLICE -2000 -900 --- W14X426		SPLICE -1600 -900 --- W14X370		SPLICE 400 100 --- W14X283	SPLICE -1100 -200 --- W14X283	SPLICE -1000 -300 --- W14X283	SPLICE -1000 -300 --- W14X283	SPLICE -1000 -200 --- W14X283	SPLICE -1200 -200 --- W14X283
FLOOR 6	-1800 -900 --- W14X370		-1500 -800 --- W14X311		600 200 --- W14X283	SPLICE -200 0 W14X283	SPLICE -200 0 W14X283	SPLICE -200 0 W14X283	SPLICE -100 0 W14X283	SPLICE -100 0 W14X283
FLOOR 5	SPLICE -1600 -800 --- W14X370	6700 2000 0 BB24X28X4.5X8 EW	SPLICE -1400 -800 --- W14X311	7500 2600 0 BB24X28X4.5X8 EW	SPLICE 700 300 --- W14X283	-800 -100 --- W14X283	-800 -200 --- W14X283	-800 -200 --- W14X283	-800 -100 --- W14X283	-900 -100 --- W14X283
FLOOR 4	-1400 -800 --- W14X370	6800 2000 0 BB24X28X6X8 EW	-1300 -700 --- W14X311	7700 2700 0 BB24X28X6X8 EW	900 300 --- W14X283	SPLICE -700 -100 --- W14X283	SPLICE -700 -100 --- W14X283	SPLICE -700 -100 --- W14X283	SPLICE -700 -100 --- W14X283	SPLICE -800 -100 --- W14X283
FLOOR 3	SPLICE -1300 -700 --- W14X283	SPLICE 82'-9 1/2" 6900 2100 0 BB24X28X6X8 EW	SPLICE -1200 -700 --- W14X283	SPLICE 7800 2700 0 BB24X28X6X8 EW	SPLICE 1000 400 --- W14X283	-600 -100 --- W14X283	-600 -100 --- W14X283	-500 -100 --- W14X283	-600 -100 --- W14X283	-700 -100 --- W14X283
FLOOR 2	-1100 -700 --- W14X283	7000 2100 0 BB24X28X6X8 EW	-1100 -700 --- W14X283	64'-9 1/2" 8000 2700 0 BB24X28X6X8 EW	1200 400 --- W14X283	SPLICE -400 -100 --- W14X283	SPLICE -500 -100 --- W14X283	SPLICE -400 -100 --- W14X283	SPLICE -400 -100 --- W14X283	SPLICE -500 -100 --- W14X283
FLOOR 1 / 1L	SPLICE		SPLICE		SPLICE	SPLICE	SPLICE	SPLICE	SPLICE	SPLICE
LOADING DOCK										
B/COLUMN ELEV.		41'-8"		40'-1 15/16"						
X (FT)[8] / Y (FT)[8]										
ROTATION (DEG)										

FLOOR \ COLUMN MARK	G-13	H-13	A.A-13.2	B-13.7/13.2	C-13.7/13.2	D-13.7/13.2	E-13.7/13.2	F-14/13.2	G-12/13.2
PD ROOF									
FLOOR 11									
FLOOR 10				13300 3200 0 BS32X32 NS	12800 3700 0 BS32X30 NS	12200 3600 0 BS30X30 NS	13300 3800 0 BS32X30 NS	12700 3300 0 BS28X28 NS	3700 1200 -600 BW24.625X24X6X4-A NS
FLOOR 9				13600 3300 0 BS32X32 NS	13000 3800 0 BS32X30 NS	12400 3700 0 BS30X30 NS	13600 3900 0 BS32X30 NS	12900 3500 0 BS28X28 NS	3800 1200 -600 BW24.625X24X6X4-A NS
FLOOR 8				172'-10" 13800 3400 0 BS32X32 NS	172'-10" 13200 3900 0 BS32X30 NS	172'-9 1/2" 12600 3800 0 BS30X30 NS	172'-10" 13800 3900 0 BS32X30 NS	172'-10" 13100 3500 0 BS28X28 NS	172'-10" 3900 1300 -500 BW24.625X24X6X4 NS
FLOOR 6U / 7				154'-9 1/2" 13800 3400 0 BS32X32 NS	154'-9 1/2" 13200 3900 0 BS32X30-A NS	154'-9 1/2" 12700 3800 0 BS30X30 NS	154'-9 1/2" 13800 3900 0 BS32X30 NS	154'-9 1/2" 13100 3500 0 BS28X28 NS	4000 1300 -400 BW24.625X24X6X4 NS
FLOOR 6	100 100 --- W14X283	100 100 --- W14X283	200 100 --- W14X283	136'-9 1/2" 14000 3500 0 BS32X32 NS	136'-9 1/2" 13400 3900 0 BS32X30-C NS	136'-9 1/2" 12800 3800 0 BS30X30-A NS	136'-9 1/2" 13900 4000 0 BS32X30 NS	136'-9 1/2" 13300 3600 0 BS28X28 NS	136'-9 1/2" 4000 1400 -400 BW24.625X24X6X4 NS
FLOOR 5	SPLICE 300 200 --- W14X283	SPLICE 200 100 --- W14X283	SPLICE 300 100 --- W14X283	TRANSFER	TRANSFER	TRANSFER	TRANSFER	TRANSFER	TRANSFER
FLOOR 4	400 200 --- W14X283	300 200 --- W14X283	400 200 --- W14X283						
FLOOR 3	SPLICE 500 300 --- W14X283	SPLICE 400 200 --- W14X283	SPLICE 500 200 --- W14X283						
FLOOR 2	600 300 --- W14X283	500 200 --- W14X283	600 200 --- W14X283						
FLOOR 1 / 1L	SPLICE	SPLICE	SPLICE						
LOADING DOCK									
B/COLUMN ELEV.									
X (FT)[8] / Y (FT)[8]									
ROTATION (DEG)									

FLOOR \ COLUMN MARK	G-14/13.2	H-12.2/13.2	H-14/13.2	J-12.4/13.2	J-14.5/13.2	K-10/13.2	K-14.5/13.2	L-10/13.2	L-14.4/13.2
PD ROOF									
FLOOR 11									
FLOOR 10	1900 500 0 BW24X20X6X4 NS	6200 1800 0 BB24X28X4.5X8 EW	3600 1000 -1000 BB24X28X6X7 EW	6600 2200 0 BB24X28X4.5X8 EW	1700 500 -500 BB24X28X6X3.5-A EW	3100 1400 -800 BW24X20X6X4 NS	3800 1600 0 BW24.625X24X6X4 NS	2200 1100 -2000 BW24X20X6X4-A NS	3000 1400 -2800 BB24X28X4.5X8 EW
FLOOR 9	2400 800 0 BW24X20X6X4 NS	6300 1900 0 BB24X28X4.5X8 EW	4000 1200 -900 BB24X28X6X7 EW	6800 2300 0 BB24X28X4.5X8 EW	2300 800 -200 BB24X28X6X3.5-A EW	186'-6 1/2" 3300 1400 0 BW24X20X6X4 NS	186'-6 1/2" 4000 1600 0 BW24.625X24X6X4 NS	186'-0 1/2" 2400 1100 -600 BW24X20X6X4 NS	186'-0 1/2" 3400 1400 -1400 BB24X28X4.5X8 EW
FLOOR 8	172'-10" 2500 900 0 BW24X20X6X4 NS	6500 2000 0 BB24X28X4.5X8 EW	4200 1300 -800 BB24X28X6X7 EW	172'-10" 7000 2400 0 BB24X28X4.5X8 EW	172'-10" 2500 900 -100 BB24X28X6X3.5 EW	167'-9" 3900 1600 0 BW24X20X6X4 NS	4000 1600 0 BW24.625X24X6X4 NS	167'-9" 3400 1600 0 BW24X20X6X4 NS	3200 1400 -1200 BB24X28X6X9 EW
FLOOR 6U / 7	2500 900 0 BW24X20X6X4 NS	154'-9 1/2" 6600 2000 0 BB24X28X4.5X8 EW	154'-9 1/2" 4300 1300 -700 BB24X28X6X7 EW	7200 2500 0 BB24X28X4.5X8 EW	2700 1000 -100 BB24X28X6X3.5 EW	154'-9 1/2" 3900 1600 0 BW24X20X6X4 NS	149'-9 1/2" 4100 1800 0 BW24.625X26X6X4 NS	154'-9 1/2" 3400 1500 0 BW24X20X6X4 NS	149'-9 1/2" 3900 1800 -700 BB24X28X6X9 EW
FLOOR 6	136'-9 1/2" 2700 900 0 BW24X20X6X4 NS	6700 2000 0 BB24X28X4.5X8 EW	4400 1400 -700 BB24X28X6X7 EW	136'-9 1/2" 7400 2600 0 BB24X28X4.5X8 EW	136'-7" 2900 1100 0 BB24X28X6X3.5 EW	3900 1600 0 BW24X20X6X4 NS	4200 1800 0 BW24.625X26X6X4 NS	3500 1600 0 BW24X20X6X4 NS	3900 1800 -700 BB24X28X6X9 EW
FLOOR 5	TRANSFER	TRANSFER	TRANSFER	TRANSFER	TRANSFER	TRANSFER	TRANSFER	TRANSFER	TRANSFER
FLOOR 4									
FLOOR 3									
FLOOR 2									
FLOOR 1 / 1L									
LOADING DOCK									
B/COLUMN ELEV.									
X (FT)[8] / Y (FT)[8]									
ROTATION (DEG)									

FLOOR \ COLUMN MARK	A.5/A.6-13.7/13.3	M/HS-12/13.3	K-13.5	L-13.5	M-13.5	M.9-13.5	A.5-13.7	B-13.7	C-13.7
PD ROOF									
FLOOR 11									
FLOOR 10	6800 1700 0 BB24X28X4.5X8 EW	3400 1100 -1100 BB24X28X6X3.5 EW	-1200 -600 --- W14X283	-1300 -700 --- W14X311					
FLOOR 9	7000 1800 0 BB24X28X4.5X8 EW	3500 1200 -900 BB24X28X6X3.5 EW	-800 -600 --- W14X283	-900 -600 --- W14X311					
FLOOR 8	177'-7" 7400 2000 0 BB24X28X4.5X8 EW	172'-10" 3600 1200 -900 BB24X28X6X3.5 EW	SPLICE -700 -500 --- W14X283	SPLICE -700 -500 --- W14X283		200 100 --- W14X283			
FLOOR 6U / 7	7600 2100 0 BB24X28X4.5X8 EW	154'-9 1/2" 3600 1300 -800 BB24X28X6X3.5 EW	SPLICE -600 -400 --- W14X283	-600 -500 --- W14X283	SPLICE	SPLICE 400 200 --- W14X283			
FLOOR 6	136'-9 1/2" 8000 2300 0 BB24X28X4.5X8 EW	3700 1300 -800 BB24X28X6X3.5 EW	SPLICE -400 -300 --- W14X283	SPLICE -500 -400 --- W14X283	200 100 --- W14X283	SPLICE 500 200 --- W14X283			
FLOOR 5	TRANSFER	TRANSFER	SPLICE -300 -300 --- W14X283	SPLICE -300 -300 --- W14X283	SPLICE 400 200 --- W14X283	SPLICE 600 200 --- W14X283	8300 2500 0 BS28X28 NS	21600 5800 -400 BS36X36 NS	18700 5500 0 BS34X32 NS
FLOOR 4			-200 -200 --- W14X283	-200 -200 --- W14X283	500 300 --- W14X283	700 300 --- W14X283	100'-9 1/2" 8800 2700 0 BS28X28 NS	100'-9 1/2" 21800 5800 -300 BS38x36-A NS	100'-9 1/2" 18900 5500 0 BS38X32 NS
FLOOR 3			SPLICE -100 -100 --- W14X283	SPLICE -200 -100 --- W14X283	SPLICE 700 300 --- W14X283	SPLICE 900 300 --- W14X283	SPLICE 82'-9 1/2" 9100 2800 0 BS28X28 NS	SPLICE 82'-9 1/2" 22000 5800 -200 BS38x36-A NS	SPLICE 82'-9 1/2" 19000 5600 0 BS38X32 NS
FLOOR 2					800 400 --- W14X283	1000 400 --- W14X283	60'-3" SEE SHEET S5-0002 FOR AFRAME	60'-3" SEE SHEET S5-0002 FOR AFRAME	19100 5600 0 BS38X32 NS
FLOOR 1 / 1L					SPLICE	SPLICE	SEE SHEET S5-0002 FOR AFRAME	48'-6" SEE SHEET S5-0002 FOR AFRAME	49'-8" SEE SHEET S5-0002 FOR AFRAME
LOADING DOCK									
B/COLUMN ELEV.							40'-6"	40'-6"	40'-6"
X (FT)[8] / Y (FT)[8]							SEE SHEET S5-0002	SEE SHEET S5-0002	SEE SHEET S5-0002
ROTATION (DEG)									

HUDSON YARDS - RETAIL PODIUM AND TOWER A
500 WEST 33RD STREET
New York, NY

Client
Related Companies
60 Columbus Circle
New York, NY 10023
TEL: 212.801.1000 FAX: 212.801.1048

Oxford Properties Group
320 Park Avenue, 17th Floor
New York, NY 10022
TEL: 212.986.7514 FAX: 212.986.7510

Architect
Kohn Pedersen Fox Associates
11 West 42nd Street
New York, New York 10036
TEL: 212.977.6500 FAX: 212.956.2526

Structural Engineer
Thornton Tomasetti, Inc.
51 Madison Avenue
New York, New York 10010
TEL: 917.661.7800 FAX: 718.661.7801

Mechanical, Electrical, Plumbing, Fire Protection
Jaros Baum & Bolles Consulting Engineers
80 Pine Street
New York, NY 10013
TEL: 212.530.9300 FAX: 212.269.5894

Retail Interior Design & Planning
Elkus-Manfredi
300 A Street
Boston, MA 02210
TEL: 617.426.1300

No.	Description	Date
2	D.O.B. AMENDMENT #2	10/15/2016
1	D.O.B. BUILDING PERMIT FILING	12/10/2014

Key Plan

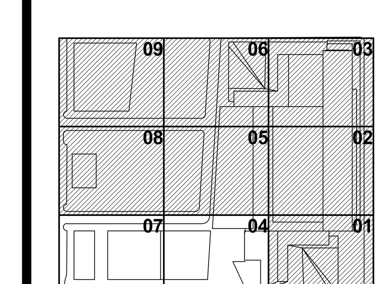

Issue Date: 12/10/2014
Project No. N11328.00
Drawn By Author
Sheet Number

STATE OF NEW YORK · MICHAEL J. SQUARZ · LICENSED PROFESSIONAL ENGINEER

HYE -TA -S5-1005

Drawing Title
COLUMN SCHEDULE V BELOW 9TH FLOOR

Damian Titus
Buildings
APPROVED
Under Directive 2 of 1975
AMENDED APPLICATION
Date: 05/03/2017
NYC Development Hub

0 4' 8' 16'
N

Drawing Number
S5-1005
B-Scan Drawing Number
S-714.01
SHEET 350 OF 443

© 2013 KOHN PEDERSEN FOX ASSOCIATES PC. All rights reserved.

S5-1005
10/17/2016 4:00:57 PM
COLUMN SCHEDULE V BELOW 9TH FLOOR
P:\NY1\Projects\N11328.00\Drawings\Structural\Record\Issued\2016-10-16 - D.O.B. Amendment No.2\Revit - Rev. Removed\HYTA TYP detail_Col.Schedule.rvt

DEPT OF BLDGS 121186251 Job Number
ES275400221 Scan Code

HUDSON YARDS - RETAIL PODIUM AND TOWER A

500 WEST 33RD STREET
New York, NY

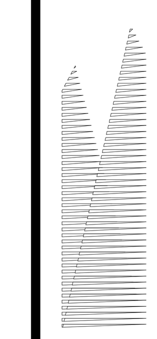

FLOOR \ COLUMN MARK	D-13.7	E-13.7	M/HS-12/13.9	M/HS-14.8/13.9	J-13.9	M.9-13.9	B-13.7/14	B-14	C-13.7/14
PD ROOF									
FLOOR 11									
FLOOR 10									
FLOOR 9			1000 400 -400 W14x730+1"PL EW	1300 500 -400 BB24X28X6X3.5 EW			9000 2400 -2000 BS32X30 NS	18400 5300 0 BS36X36-D EW	5200 1500 -700 BB24X28X6X10 EW
FLOOR 8			1100 500 -300 W14x730+1"PL EW 172'-10"	1400 500 -300 BB24X28X6X3.5 EW 172'-10"			8900 2400 -2200 BS32X30-A NS 172'-10"	18600 5400 0 BS36X36-C EW 175'-10"	5400 1600 -800 BB24X28X6X10 EW
FLOOR 6U / 7			1300 600 -200 W14x730+1"PL EW	1600 600 -200 BB24X28X6X3.5 EW		200 100 --- W14X283 SPLICE	9100 2500 -2100 BS32X30 NS 154'-9 1/2"	18900 5500 0 BS36X36 EW 157'-9 1/2"	5500 1700 -700 BB24X28X6X10 EW 154'-9 1/2"
FLOOR 6			1400 600 -100 W14x730+1"PL EW 136'-7"	1600 600 -200 BB24X28X6X3.5 EW 136'-7"		200 100 --- W14X283 SPLICE	9200 2500 -2000 BS32X30 NS 136'-9 1/2"	18900 5500 0 BS36X36 EW 139'-9 1/2"	5600 1700 -700 BB24X28X6X10 EW
FLOOR 5			1500 600 -100 W14x730+1"PL EW TRANSFER	1700 600 -200 BB24X28X6X3.5 EW TRANSFER		300 100 --- W14X283 SPLICE	9300 2500 -2000 BS32X30 NS TRANSFER	19100 5600 0 BS36X36 EW	5700 1800 -700 BB24X28X6X10 EW TRANSFER
FLOOR 4	18100 5400 0 BS32X32 NS 100'-9 1/2"	19500 5700 0 BS32X32 NS 100'-9 1/2"			200 100 --- W14X283	400 100 --- W14X283		25300 7400 0 BS36X36-A EW 103'-9 1/2"	
FLOOR 3	18300 5400 0 BS38X30 NS 82'-9 1/2"	19700 5700 0 BS38X36 NS 82'-9 1/2"			400 200 --- W14X283 SPLICE	400 200 --- W14X283 SPLICE		25700 7500 0 BS36X36-A EW 85'-9 1/2"	
FLOOR 2	18400 5500 0 BS38X30 NS 60'-3"	19800 5700 0 BS38X36 NS 64'-9 1/2"			500 200 --- W14X283	500 200 --- W14X283		25900 7500 0 BS36X36-A EW 64'-9 1/2"	
FLOOR 1 / 1L	SEE SHEET S5-0002 FOR AFRAME	19900 5800 0 BS38X36 NS 54'-0 1/2"			700 300 --- W14X283 SPLICE	500 200 --- W14X283 SPLICE		26000 7600 0 BS36X36-A EW 56'-0 1/2"	
LOADING DOCK	SEE SHEET S5-0002 FOR AFRAME	20100 5800 0 BS32X32-B NS						26400 7600 0 BS36X36-A EW	
B/COLUMN ELEV.	40'-6"	40'-6"						28'-2"	
X (FT) 8	SEE SHEET S5-0002	570.86			690.86			480.86	
Y (FT) 8		552.55			566.67			573.50	
ROTATION (DEG)									

FLOOR \ COLUMN MARK	C-14	D-13.7/14	D-14	E-13.7/14	E-14	F-14	G-14	H-14	H-14.8/14
PD ROOF									
FLOOR 11									
FLOOR 10									
FLOOR 9	13900 4200 0 BS32X32-A EW	5400 1500 -600 BB24X28X6X9 EW	13900 4200 0 BS32X32-A EW	5600 1700 -600 BB24X28X6X8 EW	15000 4500 0 BS32X32 EW	10700 3100 0 BS32X30-A EW 230'-9"	7700 2300 0 BS28X26 EW	5900 2000 0 BB24X28X5X8-A EW	1500 500 -800 BW24X22X6X4 NS
FLOOR 8	14100 4300 0 BS32X32 EW	5500 1600 -800 BB24X28X6X9 EW	14100 4300 0 BS32X32 EW	5700 1800 -700 BB24X28X6X8 EW 172'-10"	15200 4600 0 BS32X32 EW 175'-10"	11000 3300 0 BS32X30-A EW 175'-10"	8000 2500 0 BS28X26 EW 175'-10"	6100 2100 0 BB24X28X5X8 EW	1700 600 -700 BW24X22X6X4 NS 172'-10"
FLOOR 6U / 7	14400 4400 0 BS32X32 EW 157'-9 1/2"	5600 1700 -700 BB24X28X6X9 EW 154'-9 1/2"	14300 4400 0 BS32X32 EW 157'-9 1/2"	5900 1800 -600 BB24X28X6X8 EW	15400 4700 0 BS32X32 EW 157'-9 1/2"	11200 3400 0 BS32X30 EW 157'-9 1/2"	8200 2700 0 BS28X26 EW	6200 2200 0 BB24X28X5X8 EW 157'-9 1/2"	1800 800 -600 BW24X22X6X4 NS
FLOOR 6	14500 4400 0 BS32X32 EW 139'-9 1/2"	5600 1700 -700 BB24X28X6X9 EW	14300 4400 0 BS32X32 EW 139'-9 1/2"	5900 1800 -600 BB24X28X6X8 EW 136'-9 1/2"	15500 4700 0 BS32X32 EW 139'-7"	11300 3400 0 BS32X30 EW 139'-9 1/2"	8300 2700 0 BS28X26 EW 139'-9 1/2"	6300 2200 0 BB24X28X5X8 EW	1900 800 -600 BW24X22X6X4 NS 136'-7"
FLOOR 5	14700 4400 0 BS32X32 EW	5700 1700 -700 BB24X28X6X9 EW TRANSFER	14500 4400 0 BS32X32 EW	6000 1900 -600 BB24X28X6X8 EW TRANSFER	15600 4800 0 BS32X32 EW	11400 3500 0 BS32X30 EW	8400 2700 0 BS28X26 EW	6500 2300 0 BB24X28X5X8 EW	2100 900 -500 BW24X22X6X4 NS TRANSFER
FLOOR 4	17100 5200 0 BS32X30 EW 103'-9 1/2"		17500 5500 0 BS32X30 EW 103'-9 1/2"		18500 5700 0 BS32X32 EW 103'-9 1/2"	26500 7700 0 BS36X34 EW 103'-9 1/2"	12500 4200 0 BS28X26 EW 103'-9 1/2"	9900 3300 -100 BS28X24 EW 100'-9 1/2"	
FLOOR 3	17500 5200 0 BS38X36 EW 85'-9 1/2"		17700 5500 0 BS38X34 EW 85'-9 1/2"		18800 5700 0 BS38X38 EW 85'-9 1/2"	26900 7800 0 BS38X36 EW 85'-9 1/2"	12900 4200 0 BS38X36 EW 85'-9 1/2"	10200 3300 -300 BS36X34 EW 82'-9 1/2"	
FLOOR 2	17700 5300 0 BS38X36 EW		17700 5600 0 BS38X34 EW		18800 5800 0 BS38X38 EW 64'-9 1/2"	27000 7800 -1200 BS38X36 EW 60'-3"	13000 4300 0 BS38X36 EW 67'-9 1/2"	10500 3400 -600 BS36X34 EW 64'-9 1/2"	
FLOOR 1 / 1L	17800 5300 0 BS38X36 EW 56'-0 1/2"		17800 5600 0 BS38X34 EW 56'-0 1/2"		18900 5800 0 BS38X38 EW 56'-0 1/2"	SEE SHEET S5-0002 FOR AFRAME	13100 4300 0 BS38X36 EW 56'-0 1/2"	10600 3400 -500 BS36X34 EW	
LOADING DOCK	18200 5400 0 BS32X32 EW		18300 5700 0 BS32X30 EW		19300 5900 0 BS32X32 EW	SEE SHEET S5-0002 FOR AFRAME	13400 4400 0 BS28X30-A EW	10800 3400 -400 BS36X34 EW	
B/COLUMN ELEV.	28'-2"		28'-2"		28'-2"	39'-10"	28'-2"	40'-2"	
X (FT) 8	510.86		540.86		570.86	SEE SHEET S5-0002	630.86	660.86	
Y (FT) 8	571.39		569.39		567.90		566.55	566.53	
ROTATION (DEG)									

FLOOR \ COLUMN MARK	J-14.5/14	K-14	K-14.5/14	L-14	L-14.4/14	M-14	A-14.2	L-14.4	J-14.5
PD ROOF									
FLOOR 11									
FLOOR 10									
FLOOR 9	10000 3400 0 BS28X26 NS	-1600 -900 --- GR 65 W14X605	8800 3800 0 BS28X28 NS	-1600 -900 --- GR 65 W14X500	3300 1700 0 BW24.625X22X6X4 NS		700 200 -100 BW24X22X6X4 EW		
FLOOR 8	10300 3500 0 BS28X26 NS 172'-10"	-1500 -900 --- GR 65 W14X605 SPLICE	9000 3900 0 BS28X28 NS 172'-10"	-1300 -800 --- GR 65 W14X500 SPLICE	3400 1800 0 BW24.625X22X6X4 NS 172'-10"		1100 400 -200 BW24X22X6X4 EW 175'-10"		
FLOOR 6U / 7	10500 3700 0 BS28X26 NS	-1400 -800 --- W14X283 SPLICE	9300 4000 0 BS28X28 NS	-1300 -800 --- W14X283 SPLICE	3600 1900 0 BW24.625X22X6X4 NS		1300 400 -400 BW24X22X6X4 EW		
FLOOR 6	10500 3700 0 BS28X26 NS 136'-7"	-1400 -800 --- W14X283	9300 4000 0 BS28X28 NS 136'-7"	-1300 -800 --- W14X283	3600 1900 0 BW24.625X22X6X4 NS	100 100 --- W14X283 SPLICE	1600 500 -700 BW24X22X6X4 EW 139'-9 1/2"		
FLOOR 5	10700 3700 0 BS28X26 NS TRANSFER	-1200 -700 --- W14X283 SPLICE	9500 4100 0 BS28X28 NS TRANSFER	-1100 -700 --- W14X283 SPLICE	3800 2000 0 BW24.625X22X6X4 NS TRANSFER	200 200 --- W14X283 SPLICE	1800 600 -1500 BW24X22X6X4 EW		
FLOOR 4		-1000 -600 --- W14X283		-1000 -600 --- W14X283		300 200 --- W14X283	20600 5500 -700 BS36X36-A EW 103'-9 1/2"	6500 3000 0 BS34X28 NS 100'-9 1/2"	13500 4900 0 BS36X32 NS 100'-9 1/2"
FLOOR 3		-900 -600 --- W14X283 SPLICE		-900 -600 --- W14X283 SPLICE		500 300 --- W14X283 SPLICE	21400 5700 -500 BS38x36-A EW 85'-9 1/2"	6600 3100 0 BS34X28 NS 82'-9 1/2"	13600 4900 0 BS36X32 NS 82'-9 1/2"
FLOOR 2		-800 -500 --- W14X283 SPLICE		-800 -500 --- W14X283		600 300 --- W14X283	21000 5500 -100 BS38x36-A EW 67'-9 1/2"	6800 3100 0 BS34X28 NS 64'-9 1/2"	13800 4900 0 BS36X32 NS 64'-9 1/2"
FLOOR 1 / 1L		-800 -500 --- W14X283 SPLICE		-800 -500 --- W14X283 SPLICE		700 300 --- W14X283 SPLICE	21200 5500 0 BS38x36-A EW 56'-0 1/2"	6900 3100 0 BS34X28 NS	13900 4900 0 BS36X32 NS
LOADING DOCK							21900 5700 -300 BS36X36-A EW 42'-9 1/2"		
B/COLUMN ELEV.							28'-2"	40'-2"	40'-2"
X (FT) 8							438.74		690.86
Y (FT) 8							575.72		593.08
ROTATION (DEG)									

FLOOR \ COLUMN MARK	K-14.5	M/HS-14.8/14.6	A-14.1/14.7	A-14.9/14.7	H-14.8	J-14.8	K-14.8	L-14.8	M-14.8
PD ROOF									
FLOOR 11									
FLOOR 10									
FLOOR 9		2900 1000 -400 BW24X22X6X4-A EW	6700 1800 -1100 BS28X26 NS	5700 1500 0 BB24X28X6X7 EW					
FLOOR 8		3000 1000 -400 BW24X22X6X4 EW 172'-10"	6800 1900 -1000 BS28X26 NS 172'-0"	5800 1600 0 BB24X28X6X7 EW 172'-0"					
FLOOR 6U / 7		3100 1000 -300 BW24X22X6X4 EW	7100 2000 -800 BS28X26 NS	6100 1600 0 BB24X28X6X7 EW					
FLOOR 6		3100 1000 -300 BW24X22X6X4 EW 136'-7"	7100 2000 -800 BS28X26 NS 136'-7"	6200 1600 0 BB24X28X6X7 EW 136'-7"					
FLOOR 5		3100 1100 -300 BW24X22X6X4 EW TRANSFER	7300 2000 -700 BS28X26 NS TRANSFER	6300 1700 0 BB24X28X6X7 EW TRANSFER					
FLOOR 4	12700 5300 0 BS34X34 NS 100'-9 1/2"				11700 4300 0 BB24X28X6X10 EW 100'-9 1/2"	6400 2200 0 BW24.625X28X6X4-A NS 100'-9 1/2"	7200 3000 0 BB24X28X6X3.5 EW 100'-9 1/2"	1600 800 0 BW24.625X22X6X4-B NS 100'-9 1/2"	5600 2000 0 BB24X28X6X9 EW 95'-9 1/2"
FLOOR 3	12900 5300 0 BS34X34 NS 82'-9 1/2"				12000 4400 0 BB24X28X6X10 EW	6600 2200 0 BW24.625X28X6X4 NS 86'-4 1/2"	7400 3100 0 BB24X28X6X5.5 EW 82'-9 1/2"	1800 900 0 BW24.625X22X6X4 NS 82'-9 1/2"	5800 2100 0 BS32X24 NS 82'-9 1/2"
FLOOR 2	13000 5300 0 BS34X34 NS 64'-9 1/2"				12200 4500 0 BB24X28X6X10 EW	6900 2300 0 BW24.625X28X6X4 NS	7600 3100 0 BB24X28X6X5.5 EW	1900 900 0 BW24.625X22X6X4 NS	6100 2100 0 BS32X24 NS 64'-9 1/2"
FLOOR 1 / 1L	13100 5400 0 BS34X34 NS				12300 4500 0 BB24X28X6X10 EW 54'-0 1/2"	7000 2300 0 BW24.625X28X6X4 NS	7800 3200 0 BB24X28X6X5.5 EW	2100 1000 0 BW24.625X22X6X4 NS	6300 2200 0 BS32X24 NS
LOADING DOCK					12500 4500 0 BS28X24 NS	7100 2300 0 BW24.625X28X6X4 NS			
B/COLUMN ELEV.	40'-2"				40'-2"	40'-2"	40'-2"	40'-2"	40'-2"
X (FT) 8									
Y (FT) 8									
ROTATION (DEG)									

TYPICAL COLUMN SCHEDULE NOTES:
1. FOR TOP OF STRUCTURAL SLAB ELEVATIONS SEE PLANS.
2. FOR TYPICAL COLUMN TYPE DETAILS SEE S5-0001.
3. "SPLICE" INDICATES COLUMN SPLICE.
4. FOR BASE PLATE SIZE BxNxt, WIDTH 'B' IS ORIENTED PARALLEL TO COLUMN FLANGE AND LENGTH 'N' IS ORIENTED PARALLEL TO COLUMN WEB. FOR RECTANGULAR AND ROUND HSS COLUMNS, WIDTH 'B' IS ORIENTED PARALLEL TO XXX AND LENGTH 'N' IS ORIENTED PARALLEL TO YYY.
5. FOR BOTTOM OF BASE PLATE ELEVATION REFER TO TYPICAL ANCHOR ROD DETAIL.
6. COLUMN LOADS SHOWN ON SCHEDULE ARE AS FOLLOWS:
   XXX = SERVICE AXIAL DEAD LOAD IN KIPS
   XXX = SERVICE AXIAL LIVE LOAD IN KIPS
   XXX = SERVICE UPLIFT FORCE IN KIPS
7. REFER TO S2-4050 SERIES FOR COLUMNS ABOVE WHERE NOTED.
8. COORDINATES FOR OFF-GRID TOWER A COLUMNS ARE GIVEN IN THE SCHEDULE. COLUMN COORDINATES ARE BASED OFF OF A LOCAL COORDINATE SYSTEM WHERE (0,0) IS LOCATED AT THE INTERSECTION OF THE 11TH AVE AND WEST 30TH STREET PROPERTY LINE. THE MANHATTAN BOROUGH GRID THAT RELATES TO LOCAL (0,0) IS (N 19196.576, E-15007.646).

Client
Related Companies
60 Columbus Circle
New York, NY 10023
TEL: 212.801.1000 FAX: 212.801.1048

Oxford Properties Group
320 Park Avenue, 17th Floor
New York, NY 10022
TEL: 212.986.7514 FAX: 212.986.7510

Architect
Kohn Pedersen Fox Associates
11 West 42nd Street
New York, New York 10036
TEL: 212.977.6500 FAX: 212.956.2526

Structural Engineer
Thornton Tomasetti, Inc.
51 Madison Avenue
New York, New York 10010
TEL: 917.661.7800 FAX: 718.661.7801

Mechanical, Electrical, Plumbing, Fire Protection
Jaros Baum & Bolles Consulting Engineers
80 Pine Street
New York, NY 10013
TEL: 212.530.9300 FAX: 212.269.5894

Retail Interior Design & Planning
Elkus-Manfredi
300 A Street
Boston, MA 02210
TEL: 617.426.1300

No.	Description	Date
2	D.O.B. AMENDMENT #2	10/15/2016
1	D.O.B. BUILDING PERMIT FILING	12/10/2014

Key Plan

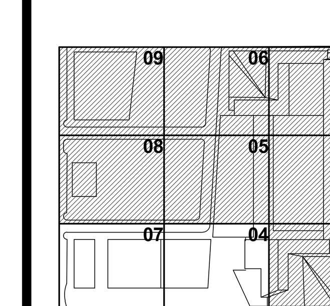

Damian Titus
Buildings
APPROVED
Under Directive 2 of 1975
AMENDED APPLICATION
Date: 05/03/2017
NYC Development Hub

STATE OF NEW YORK
MICHAEL J. SQUARZ[illegible]
LICENSED PROFESSIONAL ENGINEER

Issue Date: 12/10/2014
Project No. N11328.00
Drawn By Author
Sheet Number

HYE -TA -S5-1006

Drawing Title

COLUMN SCHEDULE VI BELOW 9TH FLOOR

0 4' 8' 16'
N

Drawing Number
S5-1006
B-Scan Drawing Number
S-715.01

© 2013 KOHN PEDERSEN FOX ASSOCIATES PC. All rights reserved.

S5-1006
10/17/2016 4:01:00 PM
COLUMN SCHEDULE VI BELOW 9TH FLOOR
P:\NY1\Projects\N11328.00\Drawings\Structural\Record\Issued\2016-10-16 - D.O.B. Amendment No.2\Revit - Rev. Removed\HYTA TYP detail_Col.Schedule.rvt

DEPT OF BLDGS 121186251 Job Number
ES480851684 Scan Code

HUDSON YARDS - RETAIL PODIUM AND TOWER A

500 WEST 33RD STREET
New York, NY

FLOOR / COLUMN MARK	A-14.9	B-14/15	B-15.5/15	C/C.1-14/15	C.1-15.3/15	D/C.9-14/15	C.9-15	E/D.8-14/15	D.8-15	F/E.8-14/15	E.8-15
PD ROOF											
FLOOR 11											
FLOOR 10											
FLOOR 9		6200 1700 -2800 BS30X28 NS	16200 4800 0 BS32X30-B NS	3800 1000 -2400 BB24X28X6X8 EW	16700 4300 0 BS30X32-B NS 187'-10"	3100 800 -2100 BB24X28X4.5X8 EW	10400 3100 0 BS28X26-A NS	2900 700 -1700 BB24X28X6X7 EW	12700 3700 0 BS28X28-A NS	2100 500 -1700 BW24.625X24X6X4 NS	11400 3100 0 BS28X28-A NS
FLOOR 8		6400 1900 -2600 BS30X28 NS 172'-10"	16500 5000 0 BS32X30 NS 172'-10"	4000 1100 -2300 BB24X28X6X8 EW 172'-10"	16900 4400 0 BS30X32 NS 172'-10"	3200 900 -2000 BB24X28X4.5X8 EW 172'-9 1/2"	10600 3200 0 BS28X26 NS 172'-10"	3100 900 -1600 BB24X28X6X7 EW 172'-10"	12900 3800 0 BS28X28 NS 172'-10"	2300 700 -1600 BW24.625X24X6X4 NS 172'-10"	11700 3300 0 BS28X28 NS 172'-10"
FLOOR 6U / 7		7000 2000 -2300 BS30X28 NS	17000 5100 0 BS32X30 NS	4300 1200 -2200 BB24X28X6X8 EW	17100 4500 0 BS30X32 NS 154'-10"	3400 1000 -1900 BB24X28X4.5X8 EW	10800 3300 0 BS28X26 NS 154'-10"	3300 1000 -1400 BB24X28X6X7 EW	13100 4000 0 BS28X28 NS	2500 900 -1400 BW24.625X28X6X4 NS	11900 3400 0 BS28X28 NS 154'-10"
FLOOR 6		7100 2000 -2200 BS30X28 NS 136'-7"	17000 5100 0 BS32X30 NS 136'-7"	4300 1200 -2100 BB24X28X6X8 EW 136'-7"	17100 4500 0 BS30X32 NS 136'-7"	3400 1000 -1900 BB24X28X4.5X8 EW 136'-7"	10900 3300 0 BS28X26 NS	3400 1000 -1400 BB24X28X6X7 EW 136'-7"	13200 4000 0 BS28X28 NS 136'-7"	2500 900 -1400 BW24.625X28X6X4 NS 136'-7"	12000 3400 0 BS28X28 NS
FLOOR 5		7600 2200 -2000 BS30X28 NS TRANSFER	17800 5300 0 BS32X30 NS	4500 1400 -2100 BB24X28X6X8 EW TRANSFER	17400 4600 0 BS30X32 NS 118'-7"	3700 1100 -1800 BB24X28X4.5X8 EW TRANSFER	11200 3400 0 BS28X26 NS 118'-7"	3600 1300 -1400 BB24X28X6X7 EW TRANSFER	13500 4200 0 BS28X28 NS 118'-7"	2900 1100 -1300 BW24.625X28X6X4 NS TRANSFER	12300 3700 0 BS28X28 NS 118'-7"
FLOOR 4	22300 6100 0 BS36X36 NS 100'-9 1/2"						11500 3400 0 BB24X28X6X9 EW 100'-9 1/2"		14000 4200 0 BS28X24 NS 100'-9 1/2"		13000 3700 0 BS28X24 NS 100'-9 1/2"
FLOOR 3	22700 6200 0 BS36X36-A NS 86'-4 1/2"						11700 3500 0 BB24X28X6X9-A EW 86'-4 1/2"		14300 4300 0 BS28X24 NS 86'-4 1/2"		13200 3800 0 BS28X24 NS 86'-4 1/2"
FLOOR 2	22900 6200 0 BS36X36-A NS 69'-0"						12000 3500 0 BS28X26 NS		14500 4400 0 BS28X28 NS		13500 3900 0 BS28X28 NS
FLOOR 1 / 1L	22900 6200 0 BS36X36-A NS 54'-0 1/2"						12000 3500 0 BS28X26 NS 54'-0 1/2"		14500 4400 0 BS28X28 NS 54'-0 1/2"		13500 3900 0 BS28X28 NS
LOADING DOCK	23000 6200 0 BS36X36-A NS						12200 3600 0 BS32X32 NS		14800 4400 0 BS32X32 NS		13800 3900 0 BS32X32 NS 54'-0 1/2"
B/COLUMN ELEV.	28'-2"						32'-5 1/2"		32'-5 1/2"		32'-5 1/2"
X (FT) 8											
Y (FT) 8											
ROTATION (DEG)											

FLOOR / COLUMN MARK	F.9-15	G/F.9-14/15	H-14.8/15	J-14.5/15	J-14.8/15	J-16.5/15	K-14.8/15	L-14.8-15	L-16.5/15	M/HS-14.8/15.1	M/HS-15.8/15.1	A-14.9/15.2
PD ROOF												
FLOOR 11												
FLOOR 10												
FLOOR 9	8100 2100 0 BS28X24 NS	1900 400 -1200 BW24.625X24X6X4 NS	8300 2900 0 BS28X24 NS	2200 700 0 BW24.625X24X6X4 NS	5400 1900 0 BB24X28X6X7 EW	1900 700 -500 BW24X20X6X4-A NS	5200 2000 0 BB24X28X6X3.5-A EW	800 400 -100 W14X605	100 100 -500 W14X605	1000 400 -400 W14X730	700 300 -100 BW24X20X6X4 EW	12200 3400 0 BS30X30 NS
FLOOR 8	8300 2300 0 BS28X24 NS 172'-10"	2000 600 -1100 BW24.625X24X6X4 NS 172'-10"	8600 3100 0 BS28X24 NS 172'-10"	2400 800 0 BW24.625X24X6X4 NS 172'-10"	5500 1900 0 BB24X28X6X7 EW 172'-10"	2100 800 -400 BW24X20X6X4 NS 172'-10"	5500 2100 0 BB24X28X6X3.5-B EW 172'-10"	900 500 0 W14X605 172'-10"	200 200 -500 W14X605 172'-10"	1000 400 -400 W14X730 172'-10"	800 300 -100 BW24X20X6X4 EW 172'-10"	12400 3500 0 BS30X30 NS 172'-0"
FLOOR 6U / 7	8600 2500 0 BS28X24 NS	2300 900 -900 BW24.625X24X6X4 NS	8900 3300 0 BS28X24 NS	2500 900 0 BW24.625X24X6X4 NS	5700 2000 0 BB24X28X6X7 EW	2300 900 -300 BW24X20X6X4 NS	5700 2300 0 BB24X28X6X3.5 EW	1100 600 0 W14x730	300 200 -400 W14x605	1100 500 -300 W14X730	900 300 -100 BW24X20X6X4 EW	12700 3600 0 BS30X30 NS
FLOOR 6	8700 2500 0 BS28X24 NS 136'-7"	2300 900 -900 BW24.625X24X6X4 NS 136'-9 1/2"	9000 3300 0 BS28X24 NS 136'-7"	2500 900 0 BW24.625X24X6X4 NS 136'-7"	5700 2000 0 BB24X28X6X7 EW 136'-7"	2300 900 -300 BW24X20X6X4 NS 136'-7"	5700 2300 0 BB24X28X6X3.5 EW 136'-7"	1100 600 0 W14x730 136'-7"	300 200 -400 W14x605 136'-7"	1100 500 -300 W14X730 136'-7"	900 300 0 BW24X20X6X4 EW 136'-7"	12800 3600 0 BS30X30 NS 136'-7"
FLOOR 5	9000 2600 0 BS28X24 NS 118'-7"	2600 1100 -800 BW24.625X24X6X4 NS TRANSFER	9300 3500 0 BS28X24 NS TRANSFER	2600 1000 0 BW24.625X24X6X4 NS TRANSFER	6100 2100 0 BB24X28X6X7 EW TRANSFER	2600 1000 -200 BW24X20X6X4 NS TRANSFER	5900 2400 0 BB24X28X6X3.5 EW TRANSFER	1300 700 0 W14x730 TRANSFER	500 400 -300 W14x605 TRANSFER	1200 500 -300 W14X730 TRANSFER	1000 400 0 BW24X20X6X4 EW TRANSFER	12900 3600 0 BS30X30 NS TRANSFER
FLOOR 4	9700 2700 0 BS28X24 NS 100'-9 1/2"											
FLOOR 3	10000 2800 0 BB24X28X5X8 EW 86'-4 1/2"											
FLOOR 2	10200 2800 0 BS28X24 NS											
FLOOR 1 / 1L	10200 2800 0 BS28X24 NS 54'-0 1/2"											
LOADING DOCK	10500 2900 0 BS30X30 NS											
B/COLUMN ELEV.	32'-5 1/2"											
X (FT) 8												
Y (FT) 8												
ROTATION (DEG)												

FLOOR / COLUMN MARK	C.1-15.3	B-15.5	M/HS-15.8/15.7	M-15.8	A-14.9/15.95	A-3S/15.95	B-16.2/16	C.1-16	C.9-16	D.8-16	E.8-16
PD ROOF											
FLOOR 11											
FLOOR 10											
FLOOR 9			1100 500 -700 W14x730		4200 1100 -900 BS28X24 NS	10800 2700 -1000 BS30X30 NS	19100 5400 0 BS32X30 NS 190'-10"	15000 4200 0 BS28X28 NS 190'-10"	10100 2800 0 BB24X28X6X9 EW	12400 3200 0 BS28X26 NS	11000 2800 0 BS28X24 NS
FLOOR 8			1200 500 -700 W14x730 172'-10"		4300 1200 -800 BS28X24 NS 172'-0"	10900 2800 -900 BS30X30 NS 172'-0"	19400 5600 0 BS32X30 NS 175'-10"	15300 4300 0 BS28X28 NS 175'-10"	10400 2900 0 BB24X28X6X9 EW 175'-10"	12900 3400 0 BS28X26 NS 175'-10"	11400 3000 0 BS28X24 NS 175'-10"
FLOOR 6U / 7			1300 500 -600 W14x730		4500 1300 -700 BS28X24 NS	11300 2900 -800 BS30X30 NS	20000 5800 0 BS32X30 NS 157'-10"	15500 4500 0 BS28X28 NS 157'-10"	10600 3000 0 BB24X28X6X9 EW	13100 3500 0 BS28X26 NS	11700 3100 0 BS28X24 NS
FLOOR 6			1300 500 -600 W14x730 136'-7"		4600 1300 -700 BS28X24 NS 136'-7"	11300 2900 -800 BS30X30 NS 136'-7"	19900 5800 0 BS32X30 NS 139'-7"	15600 4500 0 BS28X28 NS 139'-7"	10800 3000 0 BB24X28X6X9 EW 139'-7"	13200 3500 0 BS28X26-A NS 139'-7"	11700 3100 0 BS28X24 NS 139'-7"
FLOOR 5			1400 600 -600 W14x730 TRANSFER		5000 1300 -500 BS28X24 NS TRANSFER	11500 3000 -700 BS30X30 NS TRANSFER	20200 5900 0 BS34X32 NS 121'-7"	16000 4600 0 BS28X28 NS 121'-7"	11000 3100 0 BB24X28X6X9 EW 121'-7"	13500 3700 0 BS28X26 NS 121'-7"	12000 3300 0 BS28X24 NS 121'-7"
FLOOR 4	17800 4700 0 BS30X30 NS 100'-9 1/2"	18000 5300 0 BS32X30 NS 100'-9 1/2"		2400 900 -200 W14x730+1"PL EW 95'-9 1/2"				16300 4700 0 BS30X30 NS 103'-9 1/2"	11300 3200 0 BB24X28X6X9 EW 103'-9 1/2"	13800 3700 0 BS28X26 NS 103'-9 1/2"	12300 3400 0 BS28X24 NS 103'-9 1/2"
FLOOR 3	18200 4800 0 BS30X30 NS 86'-4 1/2"	18400 5400 0 BS34X34 NS 86'-4 1/2"		2500 1000 -100 BW24.625X18X6X4 EW 82'-9 1/2"				16700 4700 0 BS30X30-A NS 89'-4 1/2"	11600 3200 0 BB24X28X6X9 EW 89'-4 1/2"	14000 3800 0 BS28X26 NS 89'-4 1/2"	12500 3400 0 BS28X24 NS 89'-4 1/2"
FLOOR 2	18500 4800 0 BS32X30 NS 69'-0"	18800 5500 0 BS34X34 NS 69'-0"		2700 1000 0 BW24.625X18X6X4 EW				16700 4700 0 BS30X32-A NS 72'-0"	11800 3300 0 BS28X26-A NS	13900 3800 0 BS28X26 NS	12800 3500 0 BS28X24 NS
FLOOR 1 / 1L	18500 4800 0 BS32X30 NS 54'-0 1/2"	18800 5500 0 BS34X34 NS 54'-0 1/2"		2800 1000 BW24.625X18X6X4-A EW=				16700 4700 0 BS30X32 NS 57'-0 1/2"	11800 3300 0 BS28X26-B NS 57'-0 1/2"	13900 3800 0 BS28X26 NS 57'-0 1/2"	12800 3500 0 BS28X24 NS 57'-0 1/2"
LOADING DOCK	18800 4900 -1300 BS36X36-A NS	19100 5600 0 BS34X34 NS						17800 4800 0 BS30X32 NS	12800 3300 0 BS30X30-B NS	14800 3800 0 BS30X30 NS	13300 3500 0 BS28X28 NS
B/COLUMN ELEV.	28'-2"	28'-2"		40'-2"				27-7 1/2"	27-7 1/2"	27-7 1/2"	27-7 1/2"
X (FT) 8	480.86			780.86			480.86				
Y (FT) 8	642.42			660.08			664.42				
ROTATION (DEG)											

TYPICAL COLUMN SCHEDULE NOTES:
1. FOR TOP OF STRUCTURAL SLAB ELEVATIONS SEE PLANS.
2. FOR TYPICAL COLUMN TYPE DETAILS SEE S5-0001.
3. "SPLICE" INDICATES COLUMN SPLICE.
4. FOR BASE PLATE SIZE BxNxt, WIDTH 'B' IS ORIENTED PARALLEL TO COLUMN FLANGE AND LENGTH 'N' IS ORIENTED PARALLEL TO COLUMN WEB. FOR RECTANGULAR AND ROUND HSS COLUMNS, WIDTH 'B' IS ORIENTED PARALLEL TO XXX AND LENGTH 'N' IS ORIENTED PARALLEL TO YYY.
5. FOR BOTTOM OF BASE PLATE ELEVATION REFER TO TYPICAL ANCHOR ROD DETAIL.
6. COLUMN LOADS SHOWN ON SCHEDULE ARE AS FOLLOWS:
   XXX = SERVICE AXIAL DEAD LOAD IN KIPS
   XXX = SERVICE AXIAL LIVE LOAD IN KIPS
   XXX = SERVICE UPLIFT FORCE IN KIPS
7. REFER TO S2-4050 SERIES FOR COLUMNS ABOVE WHERE NOTED.
8. COORDINATES FOR OFF-GRID TOWER A COLUMNS ARE GIVEN IN THE SCHEDULE. COLUMN COORDINATES ARE BASED OFF OF A LOCAL COORDINATE SYSTEM WHERE (0,0) IS LOCATED AT THE INTERSECTION OF THE 11TH AVE AND WEST 30TH STREET PROPERTY LINE. THE MANHATTAN BOROUGH GRID THAT RELATES TO LOCAL (0,0) IS (N 19196.576, E-15007.646).

Client
Related Companies
60 Columbus Circle
New York, NY 10023
TEL: 212.801.1000 FAX: 212.801.1048

Oxford Properties Group
320 Park Avenue, 17th Floor
New York, NY 10022
TEL: 212.986.7514 FAX: 212.986.7510

Architect
Kohn Pedersen Fox Associates
11 West 42nd Street
New York, New York 10036
TEL: 212.977.6500 FAX: 212.956.2526

Structural Engineer
Thornton Tomasetti, Inc.
51 Madison Avenue
New York, New York 10010
TEL: 917.661.7800 FAX: 718.661.7801

Mechanical, Electrical, Plumbing, Fire Protection
Jaros Baum & Bolles Consulting Engineers
80 Pine Street
New York, NY 10013
TEL: 212.530.9300 FAX: 212.269.5894

Retail Interior Design & Planning
Elkus-Manfredi
300 A Street
Boston, MA 02210
TEL: 617.426.1300

No.	Description	Date
2	D.O.B. AMENDMENT #2	10/15/2016
1	D.O.B. BUILDING PERMIT FILING	12/10/2014

Key Plan

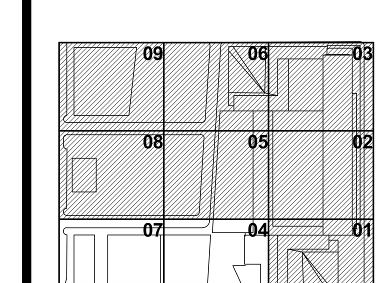

Issue Date: 12/10/2014
Project No. N11328.00
Drawn By Author
Sheet Number

STATE OF NEW YORK · MICHAEL J. SQUARZINI · LICENSED PROFESSIONAL ENGINEER · No. 080340

Damian Titus
NYC Buildings
APPROVED
Under Directive 2 of 1975
AMENDED APPLICATION
Date: 05/03/2017
NYC Development Hub

0 4' 8' 16'
N

HYE -TA -S5-1007

Drawing Title

COLUMN SCHEDULE VII BELOW 9TH FLOOR

Drawing Number
S5-1007
B-Scan Drawing Number
S-716.01
SHEET 352 OF 443

© 2013 KOHN PEDERSEN FOX ASSOCIATES PC. All rights reserved.

S5-1007
10/17/2016 4:01:03 PM
COLUMN SCHEDULE VII BELOW 9TH FLOOR
P:\NY1\Projects\N11328.00\Drawings\Structural\Record\Issued\2016-10-16 - D.O.B. Amendment No.2\Revit - Rev. Removed\HYTA TYP detail_Col.Schedule.rvt

DEPT OF BLDGS 121186251 Job Number
ES676133807 Scan Code

FLOOR \ COLUMN MARK	F.9-16	G.6-16	H.8-16.5/16	K-16.5/15	K-16.5/16	L-16.5/16	B-16.2	H.8-16.5	J.3-16.5	K-16.5
PD ROOF										
FLOOR 11										
FLOOR 10										
FLOOR 9	7200 1600 -600 BB24X28X6X8 EW	6900 2200 0 BB24X28X4.5X8 EW	10300 3100 0 BS30X28 NS	900 400 -900 BW24.625X22X6X4 NS	4000 1300 0 BW24.625X24X6X4 NS	300 100 0 W14x605				
FLOOR 8	7400 1800 -600 BB24X28X6X8 EW 175'-10"	7100 2400 0 BB24X28X4.5X8 EW 172'-10"	10600 3300 0 BS30X28 NS 172'-10"	1100 500 -900 BW24.625X22X6X4 NS 172'-10"	4200 1500 0 BW24.625X24X6X4 NS 172'-10"	500 300 0 W14x605 172'-10"				
FLOOR 6U / 7	7700 1900 -700 BB24X28X4.5X8 EW	7300 2500 0 BB24X28X4.5X8 EW	10800 3400 0 BS30X28 NS	1300 600 -800 BW24.625X22X6X4 NS	4400 1600 0 BW24.625X24X6X4 NS	700 400 0 W14x605				
FLOOR 6	7800 1900 -800 BB24X28X4.5X8 EW 139'-7"	7300 2500 0 BB24X28X4.5X8 EW 136'-7"	10900 3400 0 BS30X28 NS 136'-7"	1300 600 -700 BW24.625X22X6X4 NS 136'-7"	4400 1600 0 BW24.625X24X6X4 NS 136'-7"	700 400 0 W14x605 136'-7"				
FLOOR 5	8000 2000 -900 BB24X28X5X8 EW 121'-7"	7600 2700 0 BB24X28X4.5X8 EW	11200 3500 0 BS30X28 NS TRANSFER	1500 700 -600 BW24.625X22X6X4 NS TRANSFER	4700 1800 0 BW24.625X24X6X4 NS TRANSFER	800 500 0 W14x605 TRANSFER				
FLOOR 4	8400 2100 -900 BB24X28X6X10 EW 103'-9 1/2"	7800 2700 0 BB24X28X4.5X4.5 EW 100'-9 1/2"					20900 6000 0 BS34X34 NS 103'-9 1/2"	12600 4000 0 BS28X24 NS 100'-9 1/2"		5500 2100 0 BW24.625X24X6X4-B NS 100'-9 1/2"
FLOOR 3	8700 2200 -1100 BB24X28X6X10 EW 89'-4 1/2"	8000 2800 0 BB24X28X4.5X4.5 EW 86'-4 1/2"					21300 6100 0 BS36X36-A NS 86'-4 1/2"	13000 4100 0 BS28X24-A NS 89'-4 1/2"	1000 400 0 BW24X20X6X4 NS	5700 2100 0 BW24.625X20X6X4 NS
FLOOR 2	9000 2100 -1400 BS28X24 NS	8200 2800 0 BB24X28X4.5X8 EW					21600 6100 0 BS36X36-A NS 69'-0"	13400 4200 0 BS28X26 NS	1700 600 -300 BW24X20X6X4 NS	5900 2200 0 BW24.625X20X6X4 NS 64'-9 1/2"
FLOOR 1 / 1L	9000 2100 -1400 BS28X24 NS 57'-0 1/2"	8200 2800 0 BB24X28X4.5X8 EW 54'-0 1/2"					21600 6100 0 BS36X36-A NS 54'-0 1/2"	13500 4200 0 BS28X26 NS 54'-0 1/2"	1700 600 -300 BW24X20X6X4 NS 54'-0 1/2"	6100 2200 0 BB24X28X4.5X8 EW
LOADING DOCK	9600 2200 -1400 BS30X28 NS	8600 2900 0 BS30X28 NS					22300 6200 0 BS36X36-A NS	14200 4300 0 BS32X30 NS	1900 600 -300 BW24X20X6X4 NS	6300 2200 0 BB24X28X4.5X8 EW
B/COLUMN ELEV.	27'-7 1/2"	32'-5 1/2"					27'-7 1/2"	40'-2"	40'-2"	40'-2"
X (FT)[1]										
Y (FT)[1]										
ROTATION (DEG)										

FLOOR \ COLUMN MARK	K.7-16.5	A.8/AS-17	AS-17	AS/B-17	B-17	C.1/B-17	C.1-17	C.9-17	D.8-17	E.8-17
PD ROOF										
FLOOR 11										
FLOOR 10										
FLOOR 9			7500 1900 -1000 BS28X24 EW 190'-10"	14500 3700 -6000 BS32X32 EW 190'-10"	700 200 -900 W14x398 190'-10"	7800 2000 -3100 BS30X30 EW 190'-10"	11000 2800 -2700 BS32X30 NS 190'-10"	9900 2500 -2800 BS28X26 NS	8500 2100 -2700 BS28X24 NS	7500 1900 -3000 BS28X24 NS
FLOOR 8			7600 2000 -1000 BS28X24 EW 175'-10"	14400 3700 -6000 BS34X32 EW 175'-10"	700 200 -800 W14x398 175'-10"	7900 2000 -3000 BS30X30 EW 175'-10"	11300 2900 -2700 BS32X30 NS 175'-10"	10100 2600 -2800 BS28X26 NS 175'-10"	8800 2300 -2500 BS28X24 NS 175'-10"	7800 2000 -2900 BS28X24 NS 175'-10"
FLOOR 6U / 7			7800 2000 -900 BS28X24 EW 157'-10"	14700 3700 -5800 BS34X34 EW 157'-10"	400 100 -500 W14x398 157'-10"	8400 2100 -3000 BS30X30 EW 157'-10"	11500 3000 -2500 BS32X30 NS 157'-10"	10900 2800 -2800 BS28X28 NS	9500 2500 -2600 BS28X24 NS	8100 2100 -2800 BS28X24 NS
FLOOR 6			7800 2000 -900 BS28X24 EW 139'-7"	14800 3700 -5800 BS34X34 EW 139'-7"	300 100 -300 W14x398 139'-7"	8700 2200 -2900 BS30X30 EW 139'-7"	10600 2800 -2200 BS32X30 NS 139'-7"	11000 2800 -2900 BS28X28 NS 139'-7"	9600 2500 -2500 BS28X24 NS 139'-7"	8200 2100 -2700 BS28X24 NS 139'-7"
FLOOR 5			7900 2000 -800 BS28X24 EW 121'-7"	14900 3800 -5700 BS34X34 EW 121'-7"	400 200 -300 W14x398 121'-7"	10100 2600 -2700 BS30X30 EW 121'-7"	11200 2900 -2200 BS32X30 NS 121'-7"	11700 3100 -3000 BS28X28 NS 121'-7"	10200 2700 -2600 BS28X26 NS 121'-7"	8700 2300 -2800 BS28X28 NS 121'-7"
FLOOR 4		23100 5800 -6300 BS40X40-A EW 103-9 1/2"					20000 5100 -4100 BS36X34 NS 103'-9 1/2"	12200 3200 -3100 BS32X30 NS 103'-9 1/2"	10900 2900 -2500 BS30X30 NS 103'-9 1/2"	8700 2300 -3200 BS28X28 NS 103'-9 1/2"
FLOOR 3	1300 700 0 W14x665	23400 5900 -6100 BS40X40-A EW 86'-4 1/2"					20200 5100 -4700 BS36X34 NS 89'-4 1/2"	12700 3300 -3400 BS32X30 NS 89'-4 1/2"	11100 2900 -2900 BS30X30 NS 89'-4 1/2"	9100 2400 -3000 BS28X28 NS 89'-4 1/2"
FLOOR 2	1600 800 0 W14x665 64'-9 1/2"	23500 5900 -6100 BS40X40-A EW 69'-0"					20200 5100 -5200 BS36X36 NS 72'-0"	12900 3300 -3700 BS32X30 NS	10700 2800 -3500 BS30X30 NS	9700 2500 -3200 BS28X28 NS
FLOOR 1 / 1L	1800 900 0 W14x665	23600 5900 -6000 BS40X40-A EW 54'-0 1/2"					20200 5100 -5200 BS36X36-C NS 57'-0 1/2"	13000 3300 -3600 BS32X30 NS 57'-0 1/2"	10700 2800 -3400 BS30X30 NS 57'-0 1/2"	9700 2500 -3200 BS28X28 NS 57'-0 1/2"
LOADING DOCK		23700 5900 -5900 BS40X40-A EW					21500 5400 -7300 BS36X36-B NS	13800 3500 -4100 BS32X32-A NS	11300 2900 -4500 BS30X30-A NS	11000 2900 -5300 BS30X30-A NS
B/COLUMN ELEV.	40'-2"	27'-5 1/2"					27'-7 1/12"	27'-7 1/12"	27'-7 1/12"	27'-7 1/12"
X (FT)[1]		470.54								
Y (FT)[1]		706.12								
ROTATION (DEG)										

FLOOR \ COLUMN MARK	F.9-17	G.6-17	H.8-17	JS-17.2	A-14.1/2S	A-16.4/3S	M.9-14.5	M.9-14.8	M.9-15.3	M.9-16
PD ROOF										
FLOOR 11										
FLOOR 10										
FLOOR 9	7500 2000 -3500 BS28X24 NS	4300 1200 -400 BB24X28X4.5X4.5 EW	3200 900 -100 BW24.625X20X6X4 NS	2300 800 -200 BW24X18X6X4 EW	12400 3200 -500 BS32X32 NS					
FLOOR 8	7700 2200 -3600 BS28X24 NS 175'-10"	4400 1300 -300 BB24X28X4.5X4.5 EW 175'-10"	3400 1100 -100 BW24.625X20X6X4 NS 172'-10"	2500 900 -100 BW24X18X6X4 EW 172'-10"	12500 3300 -400 BS32X32 NS 177'-7"					
FLOOR 6U / 7	8000 2200 -3400 BS28X24 NS	4500 1400 -300 BB24X28X4.5X4.5 EW	3600 1200 0 BW24.625X22X6X4 NS 154'-10"	2700 1000 0 BW24X20X6X4 EW	12700 3300 -300 BS32X32 NS 154'-9 1/2"					
FLOOR 6	8000 2200 -3500 BS28X24 NS 139'-7"	4600 1400 -300 BB24X28X4.5X4.5 EW 136'-7"	3700 1200 0 BW24.625X22X6X4 NS	2700 1000 0 BW24X20X6X4 EW 136'-7"	12800 3400 -300 BS32X32 NS 136'-9 1/2"					
FLOOR 5	8300 2300 -3600 BS28X24 NS 121'-7"	4700 1500 -200 BB24X28X4.5X4.5 EW 118'-7"	3900 1300 0 BW24.625X22X6X4 NS 118'-7"	2900 1100 0 BW24X20X6X4 EW	12900 3400 -200 BS32X32 NS TRANSFER					
FLOOR 4	8400 2400 -3700 BS28X28 NS 103'-9 1/2"	4800 1500 -100 BB28X24X8X4.5-A NS 100'-9 1/2"	4100 1300 0 BB28X24X8X4.5-A NS 100'-9 1/2"	3100 1200 0 BW24X22X6X4-C EW 100'-9 1/2"		19400 5100 0 BS40X40-A NS 100'-9 1/2"				
FLOOR 3	8700 2400 -4200 BS28X28 NS 89'-4 1/2"	5000 1500 -100 BB28X24X8X4.5-A NS 86'-4 1/2"	4400 1300 0 BB28X24X8X4.5-A NS 86'-4 1/2"	3300 1200 0 BW24X22X6X4-B EW		19700 5100 0 BS40X40-A NS 86'-4 1/2"	100 100 W14X283	100 100 W14X283	100 100 W14X283	100 100 W14X283
FLOOR 2	8800 2500 -5000 BS28X28 NS	5200 1600 0 BB28X24X8X4.5-A NS	4600 1400 0 BB28X24X8X4.5-A NS	3500 1300 0 BW24X22X6X4-A EW 64'-9 1/2"		19900 5100 0 BS40X40-A NS 69'-0"	100 100 W14X283 64'-9 1/2"	100 100 W14X283 64'-9 1/2"	200 100 W14X283 64'-9 1/2"	100 100 W14X283 64'-9 1/2"
FLOOR 1 / 1L	8800 2500 -5000 BS28X28 NS 57'-0 1/2"	5200 1600 0 BB28X24X8X4.5-A NS 54'-0 1/2"	4800 1400 -300 BB28X24X8X4.5-A NS 54'-0 1/2"	3600 1300 0 BB28X24X7X4.5-A NS		19900 5100 0 BS40X40-A NS 54'-0 1/2"	200 100 W14X283 SPLICE	200 100 W14X283 SPLICE	300 100 W14X283 SPLICE	200 100 W14X283 SPLICE
LOADING DOCK	9600 2600 -7100 BS32X32-A NS	5500 1600 0 BB28X24X8X4.5-A NS	5300 1400 -100 BB28X24X8X4.5-A NS			20000 5100 0 BS40X40-A NS				
B/COLUMN ELEV.	27'-7 1/12"	32'-5 1/2"	40'-2"	42'-5"3/8		27'-5 1/2"	40'-2"	40'-2"	40'-2"	40'-2"
X (FT)[1]				739.10		438.74	795.86	795.86	795.86	794.05
Y (FT)[1]				708.96		674.57	586.10	601.17	632.67	660.08
ROTATION (DEG)										

FLOOR / COLUMN MARK: F.9-16, G.6-16, H.8-16.5/16, K-16.5/15, K-16.5/16, L-16.5/16, B-16.2, H.8-16.5, J.3-16.5, K-16.5, K.7-16.5, A.8/AS-17, AS-17, AS/B-17, B-17, C.1/B-17, C.1-17, C.9-17, D.8-17, E.8-17, F.9-17, G.6-17, H.8-17, JS-17.2, A-14.1/2S, A-16.4/3S, M.9-14.5, M.9-14.8, M.9-15.3, M.9-16

TYPICAL COLUMN SCHEDULE NOTES:
1. FOR TOP OF STRUCTURAL SLAB ELEVATIONS SEE PLANS.
2. FOR TYPICAL COLUMN TYPE DETAILS SEE S5-0001.
3. "SPLICE" INDICATES COLUMN SPLICE.
4. FOR BASE PLATE SIZE BxNxt, WIDTH 'B' IS ORIENTED PARALLEL TO COLUMN FLANGE AND LENGTH 'N' IS ORIENTED PARALLEL TO COLUMN WEB. FOR RECTANGULAR AND ROUND HSS COLUMNS, WIDTH 'B' IS ORIENTED PARALLEL TO XXX AND LENGTH 'N' IS ORIENTED PARALLEL TO YYY.
5. FOR BOTTOM OF BASE PLATE ELEVATION REFER TO TYPICAL ANCHOR ROD DETAIL.
6. COLUMN LOADS SHOWN ON SCHEDULE ARE AS FOLLOWS:
   XXX = SERVICE AXIAL DEAD LOAD IN KIPS
   XXX = SERVICE AXIAL LIVE LOAD IN KIPS
   XXX = SERVICE UPLIFT FORCE IN KIPS
7. REFER TO S2-4050 SERIES FOR COLUMNS ABOVE WHERE NOTED.
8. COORDINATES FOR OFF-GRID TOWER A COLUMNS ARE GIVEN IN THE SCHEDULE. COLUMN COORDINATES ARE BASED OFF OF A LOCAL COORDINATE SYSTEM WHERE (0,0) IS LOCATED AT THE INTERSECTION OF THE 11TH AVE AND WEST 30TH STREET PROPERTY LINE. THE MANHATTAN BOROUGH GRID THAT RELATES TO LOCAL (0,0) IS (N 19196.576, E-15007.646).

HUDSON YARDS - RETAIL PODIUM AND TOWER A

500 WEST 33RD STREET
New York, NY

Client
Related Companies
60 Columbus Circle
New York, NY 10023
TEL: 212.801.1000 FAX: 212.801.1048

Oxford Properties Group
320 Park Avenue, 17th Floor
New York, NY 10022
TEL: 212.986.7514 FAX: 212.986.7510

Architect
Kohn Pedersen Fox Associates
11 West 42nd Street
New York, New York 10036
TEL: 212.977.6500 FAX: 212.956.2526

Structural Engineer
Thornton Tomasetti, Inc.
51 Madison Avenue
New York, New York 10010
TEL: 917.661.7800 FAX: 718.661.7801

Mechanical, Electrical, Plumbing, Fire Protection
Jaros Baum & Bolles Consulting Engineers
80 Pine Street
New York, NY 10013
TEL: 212.530.9300 FAX: 212.269.5894

Retail Interior Design & Planning
Elkus-Manfredi
300 A Street
Boston, MA 02210
TEL: 617.426.1300

No.	Description	Date
2	D.O.B. AMENDMENT #2	10/15/2016
1	D.O.B. BUILDING PERMIT FILING	12/10/2014

Key Plan

09 06 03
08 05 02
07 04 01

Damian Titus
Buildings
APPROVED
Under Directive 2 of 1975
AMENDED APPLICATION
Date: 05/03/2017
NYC Development Hub

0 4' 8' 16'
N

STATE OF NEW YORK · MICHAEL J. SQUARZINI · LICENSED PROFESSIONAL ENGINEER · No. 080840

Issue Date: 12/10/2014
Project No. N11328.00
Drawn By Author
Sheet Number HYE -TA -S5-1008

Drawing Title
COLUMN SCHEDULE VIII BELOW 9TH FLOOR

Drawing Number S5-1008
B-Scan Drawing Number S-717.01

SHEET 353 OF 443

© 2013 KOHN PEDERSEN FOX ASSOCIATES PC. All rights reserved.

S5-1008
10/17/2016 4:01:05 PM
COLUMN SCHEDULE VIII BELOW 9TH FLOOR
P:\NY1\Projects\N11328.00\Drawings\Structural\Record\Issued\2016-10-16 - D.O.B. Amendment No.2\Revit - Rev. Removed\HYTA TYP detail_Col.Schedule.rvt

DEPT OF BLDGS 121186251 Job Number
ES687183611 Scan Code

TYPICAL COLUMN SCHEDULE NOTES:
1. FOR TYPICAL COLUMN SCHEDULE NOTES SEE S5-1001.

FLOOR \ COLUMN MARK	B/13.2 B/13.1	C/13.2 C/13.1	D/13.2 D/13.1	/13.2 /13.1 (COLUMN MARK)	F/13.2 F/13.1	G/13.2 G/13.1	DS/13.2 DS/13.1	H/13.2	J/13.2	K/13.2	L/13.2
22	6400 1500 0 BW28X24X6X5 NS 5/8" FILLET 438'-1"	5600 1300 0 BW28X20X6X4 NS 438'-1"	5400 1200 0 BW28X20X6X4 NS 438'-1"	5200 1200 0 BW28X20X6X4 NS 438'-1"	3200 800 0 W14x605 NS 438'-1"	800 400 0 W14x159 NS 438'-1"	4600 1000 -1100 BW28X22X6X4 NS 438'-1"				
21U	5600 1500 0 BW28X24X6X10 NS	4900 1200 0 BB28X24X6X2 NS	4800 1200 0 BB28X24X6X2.5 NS	4800 1200 0 BB28X24X6X2.5 NS	BB28X24X6X2 NS	1000 500 0 W14x398 NS		5100 1300 -1200 BB28X24X6X4 NS	1800 500 -100 W14x665 NS	300 100 0 W14x159 NS	
21	5800 1600 0 BW28X24X6X10 NS 402'-1"	5100 1300 0 BB28X24X6X2 NS 405'-1"	4900 1300 0 BB28X24X6X2.5 NS 405'-1"	5000 1300 0 BB28X24X6X2.5 NS 405'-1"	3300 900 0 BB28X24X6X2 NS 405'-1"	1100 500 0 W14x398 NS 405'-1"		5400 1400 -1100 BB28X24X6X4 NS 405'-1"	1900 500 0 W14x665 NS 402'-1"	300 100 0 W14x159 NS 405'-1"	
20	6900 1900 -2500 BB28X24X6X7 NS 389'-1"7/16	6000 1500 -700 BB28X24X6X5 NS 391'-5"	5300 1400 -500 BW28X24X6X9 NS 391'-5"	5400 1400 -1000 BW28X24X6X9 NS 387'-9"1/8	3500 900 0 BW24.625X20X6X4 NS 391'-5"	2700 800 -100 BW24.625X20X6X4 NS		5300 1400 -100 BW28X24X6X5 NS	2000 600 0 W14x730 NS	900 200 -200 W14x283 NS	
19	7100 2000 -2400 BB28X24X6X7 NS 371'-0 1/2"	6200 1700 -500 BB28X24X6X5 NS 371'-0 1/2"	5500 1500 -400 BW28X24X6X9 NS 371'-0 1/2"	5500 1500 -900 BW28X24X6X9 NS 371'-0 1/2"	3600 1000 0 BW24.625X20X6X4 NS 371'-0 1/2"	2900 1000 0 BW24.625X20X6X4 NS 371'-0 1/2"		5400 1400 0 BW28X24X6X5 NS 371'-0 1/2"	2200 600 0 W14x730 NS 371'-0 1/2"	1000 300 -100 W14x283 NS 371'-0 1/2"	
18	7200 2100 -2300 BB28X24X6X7 NS	6400 1700 -400 BB28X24X6X5 NS	5600 1500 -300 BW28X24X6X9 NS	5700 1500 -800 BW28X24X6X11 NS	3700 1100 0 BW24.625X20X6X4 NS	3000 1000 0 BW24.625X20X6X4 NS		5500 1500 0 BW28X24X6X5 NS	2300 700 0 W14x730 NS	1100 400 0 W14x283 NS	
17	7300 2100 -2200 BB28X24X6X7 NS 335'-0 1/2"	6400 1800 -900 BB28X24X6X5 NS 338'-0 1/2"	5700 1600 -200 BW28X24X6X9 NS 335'-0 1/2"	5800 1600 -700 BW28X24X6X11 NS 335'-0 1/2"	3800 1000 0 BW24.625X20X6X4 NS 338'-0 1/2"	3100 1100 0 BW24.625X20X6X4 NS 335'-0 1/2"		5600 1500 0 BW28X24X6X5 NS 335'-0 1/2"	2400 700 0 W14x730 NS 338'-0 1/2"	1200 400 0 W14x283 NS 335'-0 1/2"	
16	7400 2100 -2200 BB28X24X6X7 NS	6600 1800 -800 BB28X24X6X5 NS	5800 1600 -200 BW28X24X6X9 NS	5900 1600 -600 BW28X24X6X11 NS	4000 1100 0 BW24.625X20X6X4 NS	3300 1100 0 BW24.625X20X6X4 NS		5700 1500 0 BB28X24X6X6 NS	2600 700 0 W14x730+1"PL NS	1300 400 0 W14x342 NS	
15	7600 2100 -2100 BB28X24X6X7 NS 299'-0 1/2"	6700 1800 -700 BB28X24X6X5 NS 299'-0 1/2"	5900 1600 -100 BW28X24X6X9 NS 299'-0 1/2"	6000 1700 -600 BW28X24X6X11 NS 299'-0 1/2"	4100 1100 0 BW24.625X20X6X4 NS 299'-0 1/2"	3400 1100 0 BW24.625X20X6X4 NS 299'-0 1/2"		5900 1500 0 BW28X24X6X6 NS 299'-0 1/2"	2700 700 0 W14x730+1"PL NS 299'-0 1/2"	1400 500 0 W14x342 NS 299'-0 1/2"	
14	7700 2200 -2000 BB28X24X6X7 NS	6800 1900 -700 BW28X24X6X8 NS	6100 1700 0 BW28X24X6X9 NS 279'-9 3/4"	6100 1700 -500 BW28X24X6X5 NS	4200 1200 0 BW24.625X18X6X4 NS	3500 1100 0 BW24.625X18X6X4 NS 279'-11"		6000 1600 0 BW28X24X6X4 NS	2800 800 0 W14x665 NS	1500 500 0 W14x342 NS 280'-0 1/2"	
13	7800 2200 -1900 BB28X24X6X7 NS 263'-0 1/2"	7000 1900 -600 BW28X24X6X8 NS 263'-0 1/2"	6100 1700 0 BW28X24X6X9 NS	6200 1800 -400 BW28X24X6X5 NS 263'-0 1/2"	4400 1300 0 BW24.625X18X6X4 NS 263'-0 1/2"	3600 1200 0 BW24.625X18X6X4 NS		6100 1600 0 BW28X24X6X4 NS 263'-0 1/2"	2900 900 0 W14x665 NS 263'-0 1/2"	1300 500 -100 W14x342 NS 0	100 100 0 W14x176 NS 263'-0 1/2"
12	7900 2200 -1900 BB28X24X6X8 NS	7100 2000 -500 BW28X24X6X8 NS	6300 1700 0 BW28X24X6X9 NS 253'-9 3/4"	6300 1800 -400 BW28X24X6X5 NS	4500 1300 0 BW24.625X18X6X4 NS	4300 1300 0 BW24.625X18X6X4 NS 253'-7 7/8"		6200 1700 0 BW28X24X6X4 NS	3000 900 0 W14x730 NS	1400 500 0 W14x342 NS 253'-9 3/4"	200 100 0 W14x193 NS
11	8100 2200 -1800 BB28X24X6X8 NS 227'-0 1/2"	7200 2000 -400 BW28X24X6X8 NS 227'-0 1/2"	6400 1800 0 BW28X24X6X9 NS 227'-0 1/2"	6400 1900 -300 BW28X24X6X5 NS 227'-0 1/2"	4600 1300 0 BW24.625X18X6X4 NS 227'-0 1/2"	4400 1400 0 BW24.625X18X6X4 NS 227'-0 1/2"		6300 1700 0 BW28X24X6X4 NS 227'-0 1/2"	3100 900 0 W14x730 NS 227'-0 1/2"	1500 600 0 W14x342 NS 227'-0 1/2"	200 100 0 W14x193 NS 227'-0 1/2"
10	8200 2100 -800 BB28X24X6X9 NS 203'-7"	7500 1900 0 BB28X24X6X8 NS 203'-10"	6600 1800 0 BB28X24X6X5 NS 203'-10"	6700 1900 0 BB28X24X5X6 NS 208'-7"	4600 1300 0 BW24.625X20X6X4 NS 203'-10"	4500 1400 0 BW24.625X20X6X4 NS 203'-0 1/2"		6300 1700 0 BB28X24X4X6 NS 209'-6"	3400 1100 0 BW24.625X18X6X4 NS 203'-7"	1700 600 0 W14x426 NS 203'-7"	400 300 0 W14x211 NS 209'- 11 7/16"

FLOOR \ COLUMN MARK	A.6/13.3	FS/13.3	HS/13.3	A/2S AB/2S	CS/2S	FS/13.9	HS/13.9	B/14	C/14	C.1/14	D/14	D.1/14	E/14	E.1/14
22	6300 1500 0 BW24.625X28X6X11 NS 438'-6"	3100 700 0 W14x730 EW 438'-1"		8100 2000 0 BW24.625X28X6X10 EW 438'-1"		4700 1400 0 BW24.625X20X6X4 EW 438'-1"		22100 5300 -6100 BS30X36-A NS 437'-6"	420'-5"	14500 4000 -1400 BS30X30 NS 441'-1"	420'-5"	12500 3400 -900 BS28X26 NS 441'-1"	420'-5"	12800 3200 -2600 BS28X28 NS 438'-1"
21U	5200 1400 -400 BW24.625X28X6X4 NS		200 100 -500 W14x257 EW	7000 2000 0 BW24.625X28X6X10 EW			400 200 -900 W14x455 EW	17100 4800 -5600 BS36X34 NS 422'-2"	11900 3500 -300 BS28X28 NS 407'-5"		12100 2900 0 BS28X28 NS 407'-5"		12700 2900 -800 BS28X28 NS 407'-5"	
21	5400 1500 -300 BW24.625X28X6X4 NS 402'-1"		200 100 -500 W14x257 EW 402'-1"	7300 2100 0 BW24.625X28X6X10 EW 405'-1"			500 300 -800 W14x455 EW 390'-7"3/8	17600 5000 -5300 BS36X34 NS 407'-1"	12400 3500 0 BS28X28 NS 393'-9"1/2		12600 2900 0 BS28X28 NS 393'-9"1/2		13200 3000 -500 BS28X28 NS 393'-9"1/2	
20	5400 1500 -300 BW24.625X26X6X4 NS		300 200 -500 W14x233 EW	7400 2100 -200 BB24X28X6X5-A EW			400 200 -400 W14x283 EW	17900 5100 -5100 BS36X34 NS	11600 3800 -2100 BS28X28 NS		12300 3800 -1100 BS28X28 NS		12200 3600 -1400 BS28X28 NS	
19	5600 1500 -200 BW24.625X26X6X4 NS 371'-0 1/2"		400 200 -500 W14x233 EW 371'-0 1/2"	7500 2200 -100 BB24X28X6X5-A EW 371'-0 1/2"			500 300 -400 W14x283 EW 371'-0 1/2"	18400 5300 -4900 BS36X34 NS 371'-0 1/2"	11900 4000 -1900 BS28X28 NS 371'-0 1/2"		12600 3900 -900 BS28X28 NS 371'-0 1/2"		12400 3700 -1300 BS28X28 NS 371'-0 1/2"	
18	5700 1600 -200 BW24.625X26X6X4 NS		500 200 -400 W14x233 EW	7700 2300 0 BB24X28X6X5 EW			600 300 -300 W14x283 EW	18600 5500 -4700 BS36X34 NS	12200 4100 -1800 BS30X28 NS		12900 4000 -800 BS30X28 NS		12700 3800 -1100 BS30X28 NS	
17	5800 1600 -100 BW24.625X26X6X4 NS 335'-0 1/2"		600 200 -400 W14x233 EW 335'-0 1/2"	7800 2300 0 BB24X28X6X5 EW 335'-0 1/2"			700 300 -300 W14x283 EW 335'-0 1/2"	19000 5600 -4500 BS36X34 NS 335'-0 1/2"	12400 4100 -1600 BS30X28 NS 335'-0 1/2"		13200 4000 -600 BS30X28 NS 335'-0 1/2"		12900 3900 -1000 BS30X28 NS 335'-0 1/2"	
16	5900 1600 0 BW24.625X26X6X4 NS		600 200 -300 W14X311 EW	7900 2300 0 BB24X28X6X5 EW			800 300 -200 W14X311 EW	19200 5600 -4400 BS36X34 NS	12800 4300 -1400 BS30X28 NS		13400 4200 -500 BS30X30 NS		13300 4100 -700 BS30X30 NS	
15	5900 1600 0 BW24.625X26X6X4 NS 299'-0 1/2"		800 300 -300 W14X311 EW 299'-0 1/2"	8100 2400 0 BB24X28X6X5 EW 299'-0 1/2"			900 400 -600 W14X311 EW 299'-0 1/2"	19600 5700 -4200 BS36X34 NS 299'-0 1/2"	13000 4400 -1200 BS30X28 NS 299'-0 1/2"		13800 4300 -200 BS30X30 NS 299'-0 1/2"		13600 4200 -600 BS30X30 NS 299'-0 1/2"	
14	6100 1700 0 BW24.625X26X6X4 NS		800 300 -200 W14x398 EW	8200 2400 0 BB24X28X6X8 EW			1100 500 -600 W14X311 EW	19900 5800 -4000 BS36X34 NS	13400 4600 -1000 BS28X28 NS		14100 4600 -100 BS32X30 NS		13900 4400 -400 BS32X30 NS	
13	6200 1700 0 BW24.625X26X6X4 NS 263'-0 1/2"		900 300 -100 W14x398 EW 263'-0 1/2"	8400 2400 0 BB24X28X6X8 EW 263'-0 1/2"			1200 500 -500 W14X311 EW 263'-0 1/2"	20200 6000 -3800 BS36X34 NS 263'-0 1/2"	13600 4900 -900 BS28X28 NS 263'-0 1/2"		14400 4800 0 BS32X30 NS 263'-0 1/2"		14100 4600 -300 BS32X30 NS 263'-0 1/2"	
12	6300 1700 0 BW24.625X28X6X5 NS		1000 400 -100 W14x500 EW	8500 2400 0 BB24X28X6X9 EW (240'-0 1/2")			1300 500 -400 W14x370 EW	20500 6000 -3600 BS36X34 NS	13800 5000 -800 BS30X28 NS		14600 4900 0 BS32X30 NS		14300 4700 -100 BS32X30 NS	
11	6400 1700 0 BW24.625X28X6X5 NS 227'-0 1/2"		1100 400 0 W14x500 EW 227'-0 1/2"	8600 2400 0 BB24X28X6X9 EW 227'-0 1/2"			1400 500 -400 W14x370 EW 227'-0 1/2"	20700 6100 -3500 BS36X34 NS 227'-0 1/2"	14000 5000 -600 BS30X28 NS 227'-0 1/2"		14800 4900 0 BS32X30 NS 227'-0 1/2"		14500 4800 0 BS32X30 NS 227'-0 1/2"	
10	6600 1700 0 BW24.625X28X6X5 NS 203'-7"		1300 500 -200 W14x500 EW 213'-7 9/16	9400 2500 0 BS28x24 NS 218'-4 5/8"			1400 600 0 W14x500 EW 208'-7"	22100 6000 -1100 BS38X36 NS 203'-7"	15000 5100 0 BS30X30 NS 203'-7"		16100 5000 0 BS32X32 NS 203'-7"		15200 4800 0 BS32X32 NS 203'-7"	

FLOOR \ COLUMN MARK	F/14	F.1/14	F.6/14	A.9S/14	G/14	H/14	J/14	K/14	A.4/1S	A.9/1S	B.9/1S	C.95/1S	BS/1S	B/14.3	C.1/14.3	D.1/14.3	F.1/14.5
22	420'-5"		7200 1600 -4000 BB24X28X6X8 EW 441'-1"	1600 800 0 W14x455 EW 438'-1"													
21U	6000 1400 -1100 BB24X28X6X6 EW 407'-5"				900 400 0 W14x455 NS 414'-5 1/2"	3000 1000 0 BW24.625X18X6X4 NS	4400 1400 0 BW24.625X22X6X4 NS	500 200 0 W14x257 NS 403'-11 5/16"									
21	6400 1500 -800 BB24X28X6X6 EW 393'-9"1/2				1000 400 0 W14x455 NS 391'-4"5/8	3100 1000 0 BW24.625X18X6X4 NS 405'-1"	4500 1400 0 BW24.625X22X6X4 NS 399'-1"	500 200 0 W14x257 NS 391'-11"									
20	7500 2200 -1000 BB24X28X6X6 EW				4600 1600 0 BW28X24X6X4 NS	4300 1300 0 BW28X20X6X4 NS	5200 1700 0 BW28X22X6X4 NS	1000 400 0 W14x342 NS									
19	7700 2300 -900 BB24X28X6X6 EW 371'-0 1/2"				4800 1700 0 BW28X24X6X4 NS 371'-0 1/2"	4500 1500 0 BW28X20X6X4 NS 371'-0 1/2"	5400 1800 0 BW28X22X6X4 NS 371'-0 1/2"	1200 600 0 W14x342 NS 371'-0 1/2"									
18	8000 2400 -700 BB24X28X6X8 EW				5100 1800 0 BW28X24X6X4 NS	4800 1600 0 BW28X22X6X4 NS	5700 1900 0 BW28X24X6X4 NS	1400 600 0 W14x342 NS									
17	8200 2500 -600 BB24X28X6X8 EW 335'-0 1/2"				5200 1900 0 BW28X24X6X4 NS 335'-0 1/2"	4900 1600 0 BW28X22X6X4 NS 335'-0 1/2"	5800 1900 0 BW28X24X6X4 NS 335'-0 1/2"	1600 700 0 W14x342 NS 335'-0 1/2"									
16	8600 2700 -400 BB24X28X6X9 EW				5600 2100 0 BW28X24X6X7 NS	5300 1800 0 BW28X24X6X4 NS	6100 2000 0 BW28X24X6X4 NS	1800 700 0 W14x398 NS									
15	8800 2700 -200 BB24X28X6X9 EW 299'-0 1/2"				5800 2100 0 BW28X24X6X7 NS 299'-0 1/2"	5600 1900 0 BW28X24X6X4 NS 299'-0 1/2"	6300 2100 0 BW28X24X6X4 NS 299'-0 1/2"	2000 800 0 W14x398 NS 299'-0 1/2"									
14	9100 3000 0 BB24X28X6X9 EW				6100 2300 0 BW28X24X6X4 NS	5900 2000 0 BW28X22X6X4 NS	6600 2300 0 BW28X24X6X4 NS	2300 1100 0 W14x605 NS									
13	9300 3200 0 BB24X28X6X9 EW 263'-0 1/2"				6300 2600 0 BW28X24X6X4 NS 263'-0 1/2"	6100 2200 0 BW28X22X6X4 NS 263'-0 1/2"	6800 2400 0 BW28X24X6X4 NS 263'-0 1/2"	2500 1100 0 W14x605 NS 263'-0 1/2"									
12	9500 3300 0 BB24X28X6X9 EW				6500 2600 0 BW28X24X6X4 NS	6200 2300 0 BW28X22X6X4 NS	6900 2400 0 BW28X24X6X4 NS	2700 1200 0 BW24.625X22X6X4 NS									
11	9700 3300 0 BB24X28X6X9 EW 227'-0 1/2"				6700 2700 0 BW28X24X6X4 NS 227'-0 1/2"	6400 2300 0 BW28X22X6X4 NS 227'-0 1/2"	7100 2500 0 BW28X24X6X4 NS 227'-0 1/2"	2800 1300 0 BW24.625X22X6X4 NS 5/8" PJP 227'-0 1/2"									
10	9900 3400 0 BS28X24 NS 203'-7"				7000 2800 0 BB28X24X6X6 NS 203'-7"	6600 2400 0 BB28X24X6X4 NS 203'-7"	7200 2600 0 BB28X24X6X5 NS 203'-7"	3900 1400 0 W14x730+1"PL NS 203'-7"									

HUDSON YARDS - RETAIL PODIUM AND TOWER A

500 WEST 33RD STREET
New York, NY

Client
Related Companies
60 Columbus Circle
New York, NY 10023
TEL: 212.801.1000 FAX: 212.801.1048

Oxford Properties Group
320 Park Avenue, 17th Floor
New York, NY 10022
TEL: 212.986.7514 FAX: 212.986.7510

Architect
Kohn Pedersen Fox Associates
11 West 42nd Street
New York, New York 10036
TEL: 212.977.6500 FAX: 212.956.2526

Structural Engineer
Thornton Tomasetti, Inc.
51 Madison Avenue
New York, New York 10010
TEL: 917.661.7800 FAX: 718.661.7801

Mechanical, Electrical, Plumbing, Fire Protection
Jaros Baum & Bolles Consulting Engineers
80 Pine Street
New York, NY 10013
TEL: 212.530.9300 FAX: 212.269.5894

Retail Interior Design & Planning
Elkus-Manfredi
300 A Street
Boston, MA 02210
TEL: 617.426.1300

No.	Description	Date
2	D.O.B. AMENDMENT #2	10/15/2016
1	D.O.B. BUILDING PERMIT FILING	12/10/2014

Key Plan

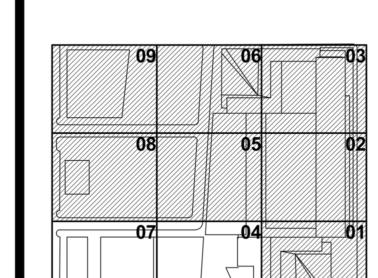

Issue Date: 12/10/2014
Project No. N11328.00
Drawn By: Author
Sheet Number: HYE -TA -S5-2001

Drawing Title: COLUMN SCHEDULE I FLOORS 10-22

Drawing Number: S5-2001
B-Scan Drawing Number: S-718.01

SHEET 354 OF 443

Damian Titus
NYC Buildings
APPROVED
Under Directive 2 of 1975
AMENDED APPLICATION
Date: 05/03/2017
NYC Development Hub

0 4' 8' 16'
N

S5-2001
10/17/2016 4:01:08 PM
COLUMN SCHEDULE I FLOORS 10-22
P:\NY1\Projects\N11328.00\Drawings\Structural\Record\Issued\2016-10-16 - D.O.B. Amendment No.2\Revit - Rev. Removed\HYTA TYP detail_Col.Schedule.rvt

© 2013 KOHN PEDERSEN FOX ASSOCIATES PC. All rights reserved.

FLOOR \ COLUMN MARK	A.9S/14.5	FS/14.6	HS/14.6	A/14.7 AB/14.7	B.0/14.7	C.1/14.7	C.95/14.7	D.1/14.7	CS/14.75
22	1200 600 0 W14x342 EW 438'-1"	4200 1200 0 W14x730+1"PL EW 438'-1"		6000 1600 0 BW24.625X20X6X4 EW 438'-1"					
21U			200 100 -600 W14x283 EW	5700 1700 0 BW24.625X24X6X4 EW					
21			200 100 -600 W14x283 EW 402'-1"	5700 1700 0 BW24.625X24X6X4 EW 409'-1"					
20			300 200 -1200 W14X311 EW 390'-6"3/8	6100 1800 0 BW24.625X22X6X4 EW					
19			400 300 -1100 W14X311 EW 371'-0 1/2"	6200 1900 0 BW24.625X22X6X4 EW 371'-0 1/2"					
18			500 300 -1100 W14x233 EW	6400 1900 0 BW24.625X22X6X4 EW					
17			600 300 -1000 W14x233 EW 335'-0 1/2"	6500 2000 0 BW24.625X22X6X4 EW 335'-0 1/2"					
16			700 300 -1000 W14x257 EW	6600 2000 0 BW24.625X24X6X4 EW					
15			800 300 -900 W14x257 EW 299'-0 1/2"	6800 2000 0 BW24.625X24X6X4 EW 299'-0 1/2"					
14			900 400 -800 W14X311 EW	6900 2000 0 BW24.625X26X6X4 EW					
13			1000 400 -800 W14X311 EW 263'-0 1/2"	7100 2100 0 BW24.625X26X6X4 EW 263'-0 1/2"					
12			1100 400 -700 W14x370 EW	7200 2100 0 BW24.625X28X6X4 EW					
11			1200 500 -700 W14x370 EW 227'-0 1/2"	7400 2100 0 BW24.625X28X6X4 EW 227'-0 1/2"					
10			1300 500 -700 W14x500 EW 213'-3 3/8"	7500 2200 0 BB24X28X6X4 EW 216'-5 1/8"					

FLOOR \ COLUMN MARK	B/15	C.1/15	C.9/15	C.95/15.0	D.1/15	D.8/15	E.1/15
22	16800 5100 0 BS30X30 NS 441'-1"	13600 4800 0 BS28X26 NS 441'-1"			12000 4500 0 BS28X24 NS 441'-1"		9700 3200 0 BB24X28X6X8 EW 438'-1"
21U	14600 5300 0 BS32X30 NS	13300 4900 0 BS28X28 NS	600 200 -200 W14x550 EW			600 300 0 W14x398 EW	
21	14600 5300 0 BS32X30 NS 407'-1"	13500 4900 0 BS28X28 NS 407'-0 1/2"	900 300 0 W14x550 EW 397'-1"			700 300 0 W14x398 EW 397'-1"	
20	15300 5500 0 BS30X30 NS	13900 5100 0 BS28X26 NS	9200 3500 0 BW24.625X28X6X11 EW			10300 3600 0 BB24X28X6X7 EW	
19	15600 5700 0 BS30X30 NS 371'-0 1/2"	14100 5300 0 BS28X26 NS 371'-0 1/2"	9500 3600 0 BW24.625X28X6X11 EW 371'-0 1/2"			10500 3700 0 BB24X28X6X7 EW 371'-0 1/2"	
18	15900 5800 0 BS30X30 NS	14500 5400 0 BS28X26 NS	9700 3700 0 BW24.625X28X6X11 EW			10800 3800 0 BB24X28X6X7 EW	
17	16200 5800 0 BS30X30 NS 335'-0 1/2"	14700 5400 0 BS28X26 NS 335'-0 1/2"	9900 3700 0 BW24.625X28X6X11 EW 335'-0 1/2"			11000 3900 0 BB24X28X6X7 EW 335'-0 1/2"	
16	16600 5900 0 BS30X30 NS	15200 5600 0 BS28X26 NS	10300 3800 0 BW24.625X28X6X11 EW			11400 4000 0 BB24X28X6X7 EW	
15	16900 6000 0 BS30X30 NS 299'-0 1/2"	15400 5600 0 BS28X26 NS 299'-0 1/2"	10500 3900 0 BW24.625X28X6X11 EW 299'-0 1/2"			11700 4100 0 BB24X28X6X7 EW 299'-0 1/2"	
14	17300 6100 0 BS30X30 NS	15800 5800 0 BS28X26 NS	10800 4000 0 BB24X28X6X6 EW			12000 4300 0 BB24X28X6X10 EW	
13	17500 6200 0 BS30X30 NS 263'-0 1/2"	16100 6000 0 BS28X26 NS 263'-0 1/2"	11000 4200 0 BB24X28X6X6 EW 263'-0 1/2"			12300 4500 0 BB24X28X6X10 EW 263'-0 1/2"	
12	17800 6300 0 BS30X32 NS	16300 6000 0 BS28X28 NS	11200 4200 0 BB24X28X6X7 EW			12400 4500 0 BB24X28X6X10 EW	
11	18000 6400 0 BS30X32 NS 227'-0 1/2"	16500 6100 0 BS28X28 NS 227'-0 1/2"	11400 4300 0 BB24X28X6X7 EW 227'-0 1/2"			12600 4600 0 BB24X28X6X10 EW 227'-0 1/2"	
10	18300 6400 0 BS30X36 NS 203'-7"	16700 6100 0 BS30X30 NS 203'-7"	11600 4300 0 BB24X28X6X9 EW 203'-7"			12800 4600 0 BS28X26 NS 203'-7"	

FLOOR \ COLUMN MARK	E.8/15	F.1/15	F.6/15	F.9/15	H/15	J/15	K/15
22			4900 1100 -1100 BW24.625X22X6X4 EW 441'-1"				
21U	600 300 0 W14X311 EW			1000 400 -200 W14x500 EW	2600 900 0 W14x730+1"PL EW	3700 1200 0 BW24.625X20X6X4 EW	500 200 0 W14x257 NS
21	600 300 0 W14X311 EW 397'-1"			1000 400 -200 W14x500 EW 397'-1"	2600 900 0 W14x730+1"PL EW 397'-1"	3700 1200 0 BW24.625X20X6X4 EW 399'-1"	500 200 0 W14x257 NS 407'-1"
20	8200 2500 0 BW24.625X28X6X10 EW			4200 1400 -500 BW24.625X20X6X4 EW	3600 1100 0 W14x730+1"PL EW	4400 1400 0 BW24.625X18X6X4 EW	900 400 -400 W14x342 NS
19	8400 2700 0 BW24.625X28X6X10 EW 371'-0 1/2"			4500 1600 0 BW24.625X20X6X4 EW 371'-0 1/2"	3800 1300 0 W14x730+1"PL EW 371'-0 1/2"	4600 1500 0 BW24.625X18X6X4 EW 371'-0 1/2"	1100 600 -200 W14x342 NS 371'-0 1/2"
18	8700 2800 0 BW24.625X28X6X10 EW			4900 1700 0 BW24.625X20X6X4 EW	4000 1400 0 W14x730+1"PL EW	4800 1600 0 BW24.625X18X6X4 EW	1300 600 -100 W14x342 NS
17	9000 2800 0 BW24.625X28X6X10 EW 335'-0 1/2"			5100 1700 0 BW24.625X20X6X4 EW 335'-0 1/2"	4200 1400 0 W14x730+1"PL EW 335'-0 1/2"	4900 1600 0 BW24.625X18X6X4 EW 335'-0 1/2"	1500 700 0 W14x342 NS 335'-0 1/2"
16	9400 3000 0 BB24X28X6X6 EW			5600 1900 0 BW24.625X22X6X4 EW	4600 1600 0 W14x730+1"PL EW	5200 1700 0 BW24.625X18X6X4 EW	1600 700 0 W14x398 NS
15	9700 3100 0 BB24X28X6X6 EW 299'-0 1/2"			5900 2000 0 BW24.625X22X6X4 EW 299'-0 1/2"	4800 1700 0 W14x730+1"PL EW 299'-0 1/2"	5400 1800 0 BW24.625X18X6X4 EW 299'-0 1/2"	1900 800 0 W14x398 NS 299'-0 1/2"
14	10000 3300 0 BB24X28X6X8 EW			6300 2200 0 BW24.625X26X6X4 EW	5100 1900 0 BW24.625X18X6X4 EW	5700 2000 0 BW24.625X20X6X4 EW	2100 1100 0 W14x500 NS
13	10200 3500 0 BB24X28X6X8 EW 263'-0 1/2"			6600 2400 0 BW24.625X26X6X4 EW 263'-0 1/2"	5300 2100 0 BW24.625X18X6X4 EW 263'-0 1/2"	5900 2100 0 BW24.625X20X6X4 EW 263'-0 1/2"	2300 1100 0 W14x500 NS 263'-0 1/2"
12	10400 3600 0 BB24X28X6X9 EW			6800 2400 0 BW24.625X28X6X7 EW	5500 2200 0 BW24.625X22X6X4 EW	6000 2200 0 BW24.625X24X6X4 EW	2500 1200 0 W14x665 NS
11	10600 3600 0 BB24X28X6X9 EW 227'-0 1/2"			7000 2500 0 BW24.625X28X6X7 EW 227'-0 1/2"	5600 2300 0 BW24.625X22X6X4 EW 227'-0 1/2"	6200 2200 0 BW24.625X24X6X4 EW 227'-0 1/2"	2600 1200 0 W14x665 NS 227'-0 1/2"
10	10800 3700 0 BS28X24 NS 203'-7"			7700 2500 0 BB24X28X6X8 EW 203'-7"	5900 2300 0 BW24.625X26X6X4 EW 209'-7"	6400 2300 0 BW24.625X28X6X5 EW 209'-7"	3000 1300 0 W14x730+1"PL NS 203'-7"

FLOOR \ COLUMN MARK	A.9S/15	FS/15.1	HS/15.1	A/15.2 AB/15.2	CS/15.3	A.9S/15.4	HS/15.7	FS/15.9
22	1400 600 0 W14x342 EW 438'-1"	4500 1200 0 BW24.625X18X6X4 EW 438'-1"		7600 2200 0 BW24.625X26X6X4 EW 438'-1"				
21U			200 100 -900 W14x370 EW	6800 2200 0 BB24.625X28X6X4 EW 425'-1"			100 100 0 W14x132 EW 422'-7"	
21			400 200 -800 W14x370 EW 405'-1"	6900 2200 0 BB24.625X28X6X4 EW 422'-7" 405'-1"			200 100 0 W14x132 EW 405'-1"	
20			300 200 -700 W14x233 EW	7300 2400 0 BW24.625X28X6X4 EW 391'-4"1/2			200 100 -1100 W14x193 EW	
19			400 200 -600 W14x233 EW 371'-0 1/2"	7500 2400 0 BW24.625X28X6X4 EW 371'-0 1/2"			300 200 -1100 W14x193 EW 371'-0 1/2"	
18			500 300 -600 W14x233 EW	7600 2400 0 BW24.625X28X6X4 EW			400 200 -1100 W14x211 EW	
17			600 300 -600 W14x233 EW 335'-0 1/2"	7700 2500 0 BW24.625X28X6X4 EW 335'-0 1/2"			400 200 -1000 W14x211 EW 335'-0 1/2"	
16			700 300 -500 W14x283 EW	7800 2500 0 BW24.625X28X6X7 EW			500 200 -1000 W14x233 EW	
15			800 300 -900 W14x283 EW 299'-0 1/2"	8100 2500 0 BW24.625X28X6X7 EW 299'-0 1/2"			600 200 -900 W14x233 EW 299'-0 1/2"	
14			900 300 -800 W14x257 EW	8200 2500 0 BW24.625X28X6X7 EW			600 200 -900 W14x283 EW	
13			1000 300 -800 W14x257 EW 263'-0 1/2"	8300 2500 0 BW24.625X28X6X7 EW 263'-0 1/2"			700 200 -900 W14x283 EW 263'-0 1/2"	
12			1000 400 -700 W14X311 EW	8500 2600 0 BW24.625X28X6X10 EW			800 300 -800 W14X311 EW	
11			1100 400 -700 W14X311 EW 227'-0 1/2"	8600 2600 0 BW24.625X28X6X10 EW 227'-0 1/2"			900 300 -800 W14X311 EW 227'-0 1/2"	
10			1200 500 -200 W14x426 EW 209'-0 1/2"	8700 2600 0 BB24X28X6X6 EW 203'-7"			900 400 -800 W14x342 EW 208'-7"	

FLOOR \ COLUMN MARK	A/15.95 AB/15.95	B/16	C.1/16	C.9/16	C.95/16.0	D.1/16	D.8/16	D.9/16	E.1/16	E.7/16	E.8/16
22	10800 3000 0 BB24X28X6X7 EW 438'-1"	22500 5900 -1100 BS30X36-A NS 441'-1"	13500 3700 0 BS28X26 NS 441'-1"	5600 2500 0 BW24.625X22X6X4 EW 438'-1"			7500 2600 0 BB24X28X6X4 EW 433'-1"				6200 1900 -1200 BB24X28X6X4 EW 441'-1"
21U	7600 2900 0 BB24X28X6X7 EW 416'-0"	14600 4900 -3300 BS30X36 NS 1" PJP	11200 3800 0 BS28X26 NS	7100 2600 0 BW24.625X28X6X11 EW			8100 2700 0 BB24X28X6X6 EW				6800 2000 -1100 BB24X28X6X6 EW
21	7700 2900 0 BB24X28X6X7 EW 407'-1"	15000 4900 -3000 BS30X36 NS 1" PJP 407'-1"	11300 3800 0 BS28X26 NS 407'-0 1/2"	7100 2600 0 BW24.625X28X6X11 EW 407'-1"			8100 2700 0 BB24X28X6X6 EW 407'-1"				6900 2000 -1100 BB24X28X6X6 EW 407'-1"
20	10700 3300 0 BB24X28X6X11 EW	15300 5100 -3300 BS30X36 NS 1" PJP	12900 4000 0 BS28X26 NS	7400 2700 0 BW24.625X28X6X5 EW			8800 2900 0 BB24X28X6X6 EW				7200 2200 -1000 BW24.625X28X6X11 EW
19	11000 3400 0 BB24X28X6X11 EW 371'-0 1/2"	16000 5300 -2700 BS30X36 NS 374'-0 1/2"	13000 4100 0 BS28X26 NS 374'-0 1/2"	7600 2800 0 BW24.625X28X6X5 EW 374'-0 1/2"			9100 3000 0 BB24X28X6X6 EW 374'-0 1/2"				7400 2300 -300 BW24.625X28X6X11 EW 374'-0 1/2"
18	11100 3400 0 BB24X28X6X11 EW	16100 5300 -1900 BS30X30 NS	12900 4200 0 BS28X26 NS	7700 2800 0 BW24.625X28X6X5 EW			9300 3000 0 BB24X28X6X6 EW				7600 2400 0 BW24.625X28X6X7 EW
17	11200 3500 0 BB24X28X6X11 EW 335'-0 1/2"	16100 5400 -1100 BS30X30 NS 338'-0 1/2"	12900 4200 0 BS28X26 NS 338'-0 1/2"	7900 2900 0 BW24.625X28X6X5 EW 338'-0 1/2"			9500 3100 0 BB24X28X6X6 EW 338'-0 1/2"				7900 2400 0 BW24.625X28X6X7 EW 338'-0 1/2"
16	11300 3500 0 BB24X28X6X11 EW	16000 5400 -400 BS30X30 NS	12900 4300 0 BS28X26 NS	8000 2900 0 BW24.625X28X6X5 EW			9800 3100 0 BB24X28X6X8 EW				8100 2500 0 BW24.625X28X6X7 EW
15	11500 3500 0 BB24X28X6X11 EW 299'-0 1/2"	16000 5500 0 BS30X30 NS 302'-0 1/2"	13000 4300 0 BS28X26 NS 302'-0 1/2"	8200 3000 0 BW24.625X28X6X5 EW 302'-0 1/2"			10100 3200 0 BB24X28X6X8 EW 302'-0 1/2"				8400 2600 0 BW24.625X28X6X7 EW 302'-0 1/2"
14	11600 3500 0 BS28X24 NS	16100 5500 0 BS30X30 NS	13200 4400 0 BS28X26 NS	8400 3000 0 BW24.625X28X6X8 EW			10300 3300 0 BB24X28X6X11 EW				8700 2700 0 BB24X28X6X7 EW
13	11700 3500 0 BS28X24 NS 263'-0 1/2"	16300 5600 0 BS30X30 NS 266'-0 1/2"	13400 4400 0 BS28X26 NS 266'-0 1/2"	8600 3000 0 BW24.625X28X6X8 EW 266'-0 1/2"			10600 3300 0 BB24X28X6X11 EW 266'-0 1/2"				8900 2700 0 BB24X28X6X7 EW 266'-0 1/2"
12	11800 3500 0 BS28X24 NS	16500 5600 0 BS30X30 NS	13600 4500 0 BS28X26 NS	8800 3100 0 BB24X28X6X6 EW			10800 3300 0 BB24X28X6X11 EW				9100 2800 0 BB24X28X6X7 EW
11	12000 3600 0 BS28X24 NS 227'-0 1/2"	16700 5700 0 BS30X30 NS 230'-0 1/2"	13700 4500 0 BS28X26 NS 230'-0 1/2"	9000 3100 0 BB24X28X6X6 EW 230'-0 1/2"			11100 3400 0 BB24X28X6X11 EW 230'-0 1/2"				9400 2800 0 BB24X28X6X7 EW 230'-0 1/2"
10	13000 3300 0 BS28X28 NS 205'-7"	17000 5800 0 BS30X34 NS 203'-7"	13900 4600 0 BS28X26 NS 211'-7"	9300 3200 0 BB24X28X6X8 EW 211'-7"			11400 3400 0 BS28X24 NS 211'-7"				9600 2900 0 BB24X28X6X8 EW 211'-7"

TYPICAL COLUMN SCHEDULE NOTES:
1. FOR TYPICAL COLUMN SCHEDULE NOTES SEE S5-1001.

DEPT OF BLDGS 121186251 Job Number
ES046274051 Scan Code

HUDSON YARDS - RETAIL PODIUM AND TOWER A

500 WEST 33RD STREET
New York, NY

Client
Related Companies
60 Columbus Circle
New York, NY 10023
TEL: 212.801.1000 FAX: 212.801.1048

Oxford Properties Group
320 Park Avenue, 17th Floor
New York, NY 10022
TEL: 212.986.7514 FAX: 212.986.7510

Architect
Kohn Pedersen Fox Associates
11 West 42nd Street
New York, New York 10036
TEL: 212.977.6500 FAX: 212.956.2526

Structural Engineer
Thornton Tomasetti, Inc.
51 Madison Avenue
New York, New York 10010
TEL: 917.661.7800 FAX: 718.661.7801

Mechanical, Electrical, Plumbing, Fire Protection
Jaros Baum & Bolles Consulting Engineers
80 Pine Street
New York, NY 10013
TEL: 212.530.9300 FAX: 212.269.5894

Retail Interior Design & Planning
Elkus-Manfredi
300 A Street
Boston, MA 02210
TEL: 617.426.1300

No.	Description	Date
2	D.O.B. AMENDMENT #2	10/15/2016
1	D.O.B. BUILDING PERMIT FILING	12/10/2014

Key Plan

09 06 03
08 05 02
07 04 01

Issue Date: 12/10/2014
Project No. N11328.00
Drawn By Author
Sheet Number

STATE OF NEW YORK · MICHAEL J. SQUARZINI · LICENSED PROFESSIONAL ENGINEER · No. 080840

HYE -TA -S5-2002

Drawing Title

COLUMN SCHEDULE II FLOORS 10-22

Drawing Number
S5-2002
B-Scan Drawing Number
S-719.01

SHEET 355 OF 443

Damian Titus
NYC Buildings
APPROVED
Under Directive 2 of 1975
AMENDED APPLICATION
Date: 05/03/2017
NYC Development Hub

0 4' 8' 16'
N

S5-2002
10/17/2016 4:01:11 PM
COLUMN SCHEDULE II FLOORS 10-22
P:\NY1\Projects\N11328.00\Drawings\Structural\Record\Issued\2016-10-16 - D.O.B. Amendment No.2\Revit - Rev. Removed\HYTA TYP detail_Col.Schedule.rvt

© 2013 KOHN PEDERSEN FOX ASSOCIATES PC. All rights reserved.

FLOOR \ COLUMN MARK	F.1/16	F.6/16	A.9S/16	G.6/16	H.8/16	K/16	CS/16.1	ES/16.7	A/3S AB/16.8	CS/16.8
22			2400 800 0 W14x550 EW 433'-1"	3000 800 0 W14x730+1"PL EW 438'-1"	4900 1200 -1700 BW24.625X28X6X6 EW 438'-1"	300 200 0 W14X342 NS 438'-1"			6100 1700 0 BW24.625X28X6X4 EW 5/8" FILLET 438'-1"	
21U			3100 900 -1400 BW24.625X22X6X4 EW	2900 800 -600 BW24.625X20X6X4 EW	5400 1500 0 BW24.625X28X6X6 EW	700 300 0 W14X311 NS			5100 1600 0 BW24.625X24X6X4 EW	
21			3200 1000 -1400 BW24.625X22X6X4 EW 407'-1"	3000 800 -500 BW24.625X20X6X4 EW 402'-1"	5500 1500 0 BW24.625X28X6X6 EW 402'-1"	700 300 0 W14X311 NS 407'-1"			5200 1700 0 BW24.625X24X6X4 EW 405'-1"	
20			4800 1400 0 BW24.625X20X6X4 EW	3200 900 -400 W14x730 EW	5800 1600 0 BW24.625X26X6X4 EW	1400 500 -300 W14x500 NS			5700 1800 0 BW24.625X24X6X4 EW	
19			5000 1600 0 BW24.625X20X6X4 EW 374'-0 1/2"	3400 1000 -300 W14x730 EW 371'-0 1/2"	5900 1800 0 BW24.625X26X6X4 EW 371'-0 1/2"	1600 600 -200 W14x500 NS 371'-0 1/2"			5800 1900 0 BW24.625X24X6X4 EW 371'-0 1/2"	
18			5100 1600 0 BW24.625X20X6X4 EW	3500 1100 -200 W14x730 EW	6100 1800 0 BW24.625X22X6X4 EW	1800 700 0 W14x500 NS			5900 1900 0 BW24.625X24X6X4 EW	
17			5200 1600 0 BW24.625X20X6X4 EW 338'-0 1/2"	3700 1100 -100 W14x730 EW 335'-0 1/2"	6200 1900 0 BW24.625X22X6X4 EW 335'-0 1/2"	2000 700 0 W14x500 NS 335'-0 1/2"			6000 1900 0 BW24.625X24X6X4 EW 335'-0 1/2"	
16			5200 1600 0 BW24.625X20X6X4 EW	3900 1200 0 W14x730+1"PL EW	6400 1900 0 BW24.625X22X6X4 EW	2100 700 0 W14x500 NS			6100 1900 0 BW24.625X24X6X4 EW	
15			5300 1700 0 BW24.625X20X6X4 EW 302'-0 1/2"	4100 1200 0 W14x730+1"PL EW 299'-0 1/2"	6600 2000 0 BW24.625X22X6X4 EW 299'-0 1/2"	2200 800 0 W14x500 NS 299'-0 1/2"			6200 2000 0 BW24.625X24X6X4 EW 299'-0 1/2"	
14			5400 1700 0 BW24.625X24X6X4 EW	4300 1300 0 BW24.625X18X6X4 EW	6800 2200 0 BW24.625X24X6X4 EW	2500 1000 0 W14x605 NS			6300 2000 0 BW24.625X24X6X4 EW	
13			5600 1700 -100 BW24.625X24X6X4 EW 266'-0 1/2"	4500 1400 0 BW24.625X18X6X4 EW 263'-0 1/2"	7000 2200 0 BW24.625X24X6X4 EW 263'-0 1/2"	2700 1100 0 W14x605 NS 263'-0 1/2"			6400 2000 0 BW24.625X24X6X4 EW 263'-0 1/2"	
12			5700 1800 -300 BW24.625X28X6X4 EW	4700 1400 0 BW24.625X18X6X4 EW	7100 2200 0 BW24.625X26X6X4 EW	2800 1100 0 W14x730+1"PL NS			6500 2000 0 BW24.625X26X6X4 EW	
11			5700 1800 -600 BW24.625X28X6X4 EW 230'-0 1/2"	4800 1400 0 BW24.625X18X6X4 EW 227'-0 1/2"	7200 2300 0 BW24.625X26X6X4 EW 227'-0 1/2"	3000 1200 0 W14x730+1"PL NS 227'-0 1/2"			6600 2000 0 BW24.625X26X6X4 EW 227'-0 1/2"	
10			6300 1700 -200 BB24X28X6X6 EW 211'-7"	5000 1400 0 BW24.625X22X6X4 EW 209'-7"	7400 2300 0 BW24.625X28X6X5 EW 209'-7"	3700 1300 0 W14x730+1"PL NS 207'-7"			7100 1900 0 BB24X28X6X4 EW 203'-7"	

FLOOR \ COLUMN MARK	B/17	C.1/17	C.9/17	D.8/17	E.8/17	F.9/17.0	G.6/17	H.8/17	JS/17.2	AS/17 A.5/17.1
22	9900 2800 0 BB28X24X6X7 NS 438'-1"	600 200 -200 W14x233 NS 438'-1"	4600 1500 0 BW28X18X6X4 NS 433'-1"	800 300 0 W14x193 NS 441'-1"	1300 500 0 W14x257 NS 433'-1"	7600 1800 0 BB24X28X6X7 NS 441'-1"	2100 600 0 BW28X24X6X7 NS 438'-1"	1300 400 -1600 W14x730 NS 438'-1"	200 100 0 W14x283 EW	6600 1900 0 BW24.625X28X6X6 NS 5/8" FILLET 438'-1"
21U	8300 2700 0 BB28X24X6X7 NS	800 200 -600 W14x550 NS	5600 1600 0 BW28X24X6X4-A NS	1900 700 -200 W14x730+1"PL NS	2000 600 0 W14x730 NS	5900 1500 0 BW28X24X6X4 NS	2300 600 0 W14x730+1"PL NS	1200 400 -800 W14x605 NS	400 200 0 W14x257 EW	6100 1900 -600 BW24.625X28X6X7 NS
21	8600 2900 0 BB28X24X6X7 NS 407'-1"	1000 300 -500 W14x550 NS 395'-6"5/8	5600 1600 0 BW28X24X6X4-A NS 407'-1"	2100 800 -100 W14x730+1"PL NS 397'-1"	2200 700 0 W14x730 NS 397'-1"	6000 1500 0 BW28X24X6X4 NS 407'-1"	2400 600 0 W14x730+1"PL NS 405'-1"	1400 400 -700 W14x605 NS 402'-1"	400 200 0 W14x257 EW 405'-1"	6200 1900 -500 BW24.625X28X6X7 NS 402'-1"
20	9900 3200 0 BB28X24X6X6 NS	7200 2200 0 BW28X24X6X5 NS	6100 1800 0 BW28X22X6X4 NS	5100 1500 0 BW28X20X6X4 NS	4700 1400 0 BW28X18X6X4 NS	6400 1700 0 BW28X22X6X4 NS	3000 1000 -1100 W14x730+1"PL NS	1400 500 -700 W14x455 NS	900 300 -1400 W14x398 EW	6200 1900 -500 BW24.625X28X6X11-A NS
19	10700 3400 0 BB28X24X6X6 NS 374'-0 1/2"	7500 2400 0 BW28X24X6X5 NS 374'-0 1/2"	6400 2000 0 BW28X22X6X4 NS 374'-0 1/2"	5400 1700 0 BW28X20X6X4 NS 374'-0 1/2"	5000 1600 0 BW28X18X6X4 NS 374'-0 1/2"	6500 1800 0 BW28X22X6X4 NS 374'-0 1/2"	3200 1100 -1000 W14x730+1"PL NS 371'-0 1/2"	1600 600 -600 W14x455 NS 371'-0 1/2"	1100 400 -1300 W14x398 EW 371'-0 1/2"	6300 2000 -400 BW24.625X28X6X11-A NS 371'-0 1/2"
18	11400 3700 0 BS28X28 NS	7800 2500 0 BW28X24X6X8 NS	6600 2100 0 BW28X24X6X4 NS	5700 1800 0 BW28X22X6X4 NS	5200 1600 0 BW28X20X6X4 NS	6700 1900 0 BW28X24X6X4 NS	3300 1100 -900 W14x730+1"PL NS	1700 600 -500 W14x426 NS	1200 400 -1200 W14x398 EW	6400 2000 -400 BW24.625X28X6X11 NS
17	12200 3900 -200 BS28X28 NS 338'-0 1/2"	8000 2500 -300 BW28X24X6X8 NS 338'-0 1/2"	6800 2100 0 BW28X24X6X4 NS 338'-0 1/2"	5900 1800 -100 BW28X22X6X4 NS 338'-0 1/2"	5400 1700 0 BW28X20X6X4 NS 338'-0 1/2"	6800 1900 0 BW28X24X6X4 NS 338'-0 1/2"	3500 1100 -800 W14x730+1"PL NS 335'-0 1/2"	1800 700 -400 W14x426 NS 335'-0 1/2"	1300 400 -1200 W14x398 EW 335'-0 1/2"	6400 2000 -400 BW24.625X28X6X11 NS 335'-0 1/2"
16	13100 4100 -1500 BS28X28 NS	8300 2600 -600 BW28X24X6X11 NS	7100 2200 -100 BW28X24X6X8 NS	6200 1900 -400 BW28X24X6X5 NS	5500 1700 -400 BW28X22X6X4 NS	7000 1900 0 BW28X24X6X6 NS	3600 1200 -800 BW24.625X18X6X4 NS	1900 700 -400 W14x426 NS	1300 400 -1100 W14x398 EW	6500 2000 -300 BW24.625X28X6X11 NS
15	14000 4300 -2600 BS28X28 NS 302'-0 1/2"	8600 2700 -900 BW28X24X6X11 NS 302'-0 1/2"	7300 2300 -500 BW28X24X6X8 NS 302'-0 1/2"	6500 2000 -600 BW28X24X6X5 NS 302'-0 1/2"	5700 1700 -800 BW28X22X6X4 NS 302'-0 1/2"	7200 2000 -300 BW28X24X6X6 NS 302'-0 1/2"	3700 1200 -700 BW24.625X18X6X4 NS 299'-0 1/2"	2100 700 -300 W14x426 NS 299'-0 1/2"	1400 500 -1100 W14x398 EW 299'-0 1/2"	6600 2000 -300 BW24.625X28X6X11 NS 299'-0 1/2"
14	15200 4600 -3700 BS32X30 NS	8900 2800 -1300 BS28X24 NS	7700 2300 -800 BB28X24X6X7 NS	6700 2000 -1000 BW28X24X6X7 NS	5900 1800 -1200 BW28X24X6X6 NS	7300 2000 -800 BW28X24X6X9 NS	3900 1300 -600 BW24.625X18X6X4 NS	2200 800 -200 W14x500 NS	1600 700 -1000 W14x426 EW	6700 2000 -200 BB28X24X6X4 NS
13	16400 5000 -4800 BS32X30 NS 266'-0 1/2"	9200 2800 -1600 BS28X24 NS 266'-0 1/2"	8000 2400 -1200 BB28X24X6X7 NS 266'-0 1/2"	6900 2100 -1300 BW28X24X6X7 NS 266'-0 1/2"	6100 1800 -1700 BW28X24X6X6 NS 266'-0 1/2"	7500 2000 -1400 BW28X24X6X9 NS 266'-0 1/2"	4000 1300 -500 BW24.625X18X6X4 NS 263'-0 1/2"	2300 800 -100 W14x500 NS 263'-0 1/2"	1700 700 -900 W14x426 EW 263'-0 1/2"	6700 2100 -200 BB28X24X6X4 NS 263'-0 1/2"
12	17600 5300 -5800 BS36X36 NS	9500 2900 -2000 BS28X24 NS	8300 2500 -1500 BS28X24 NS	7200 2100 -1600 BB28X24X6X7 NS	6200 1900 -2200 BW28X24X6X9 NS	7700 2000 -2000 BB28X24X6X8 NS	4200 1300 -400 BW24.625X18X6X4 NS	2400 900 -100 W14x605 NS	1800 700 -800 W14x500 EW	6800 2100 -200 BB28X24X6X4 NS
11	18800 5600 -6800 BS36X36 NS 230'-0 1/2"	9800 3000 -2300 BS28X24 NS 230'-0 1/2"	8600 2600 -1900 BS28X24 NS 230'-0 1/2"	7400 2200 -1900 BB28X24X6X7 NS 230'-0 1/2"	6500 1900 -2600 BW28X24X6X9 NS 230'-0 1/2"	7800 2000 -2600 BB28X24X6X8 NS 230'-0 1/2"	4300 1300 -300 BW24.625X18X6X4 NS 227'-0 1/2"	2500 900 0 W14x605 NS 227'-0 1/2"	1900 800 -800 W14x500 EW 227'-0 1/2"	6900 2100 -100 BB28X24X6X4 NS 227'-0 1/2"
10	21000 5300 -7500 BS36X36 NS 211'-7"	11000 2800 -2400 BS28X26 NS 211'-7"	9600 2500 -2400 BS28X24 NS 211'-7"	8200 2100 -2200 BS28X24 NS 211'-7"	7100 1800 -2400 BB28X24X6X9 NS 211'-7"	8100 2000 -3200 BS28X24 NS 211'-7"	4200 1200 -500 BW24.625X22X6X4 NS 208'-7"	3000 900 -100 W14x665 NS 208'-7"	2100 800 -300 W14x605 EW 208'-7"	7400 1900 -1000 BB28X24X6X8 NS 203'-7"

FLOOR \ COLUMN MARK	B/17.1	C/17.1	D/17.1	E/17.1	F/17.1	BS/17 BS/17.1	P/1	P/2	P/3	P/4
22		7500 2100 0 BW28X24X6X5 NS 438'-1"		4200 1000 0 W14x730+1"PL NS 438'-1"			300 100 0 BB24X24X1.5X1.5 NS 5/8" PJP 438'-1"	200 100 0 BB24X24X1X1 NS 5/8" PJP 438'-1"	200 100 0 TP25.5X27.25X6X2 435'-1"	
21U							600 200 -1000 BB24X24X1.5X1.5-A NS	500 200 -1000 BB24X24X1X1-A NS	300 200 -400 TP25.5X27.25X6X2 416'-10 7/8"	
21							700 200 -1000 BB24X24X1.5X1.5-A NS 402'-1"	600 300 -900 BB24X24X1X1-A NS 402'-1"	300 200 -400 TP25.5X27.25X6X2 409'-7 3/16"	300 100 -400 TP25.5X27.25X6X2 409'-7 3/16"
20							800 400 -1000 BB24X24X1.5X1.5 NS	700 300 -800 BB24X24X1X1 NS	400 200 -300 TP25.5X27.25X6X2 392'-10 1/2"	300 100 -300 TP25.5X27.25X6X2 392'-10 1/2"
19							1000 500 -900 BB24X24X1.5X1.5 NS 371'-0 1/2"	800 400 -800 BB24X24X1X1 NS 371'-0 1/2"	400 200 -300 TP25.5X27.25X6X2 371'-0 1/2"	400 200 -300 TP25.5X27.25X6X2 371'-0 1/2"
18							1100 500 -800 BB24X24X1.5X1.5 NS	900 400 -700 BB24X24X1X1 NS	500 200 -300 TP25.5X27.25X6X1	400 200 -300 TP25.5X27.25X6X1
17							1200 500 -800 BB24X24X1.5X1.5 NS 335'-0 1/2"	1000 400 -700 BB24X24X1X1 NS 335'-0 1/2"	500 200 -200 TP25.5X27.25X6X1 335'-0 1/2"	500 200 -200 TP25.5X27.25X6X1 335'-0 1/2"
16							1300 500 -700 BB24X24X1.5X1.5 NS	1100 500 -600 BB24X24X1X1 NS	500 300 -200 TP25.5X27.25X6X1	500 200 -200 TP25.5X27.25X6X1
15							1500 600 -600 BB24X24X1.5X1.5 NS 299'-0 1/2"	1100 500 -600 BB24X24X1X1 NS 299'-0 1/2"	600 300 -200 TP25.5X27.25X6X1 299'-0 1/2"	600 200 -200 TP25.5X27.25X6X1 299'-0 1/2"
14							1600 700 -500 BB24X24X2.25X2.25 NS	1300 500 -500 BB24X24X1.5X1.5 NS	600 300 -200 TP25.5X27.25X6X1	600 200 -200 TP25.5X27.25X6X1
13							1700 700 -400 BB24X24X2.25X2.25 NS 263'-0 1/2"	1300 500 -400 BB24X24X1.5X1.5 NS 263'-0 1/2"	700 300 -200 TP25.5X27.25X6X1 263'-0 1/2"	600 300 -100 TP25.5X27.25X6X1 263'-0 1/2"
12							1800 800 -400 BB24X24X2.25X2.25 NS	1400 500 -400 BB24X24X1.5X1.5 NS	700 300 -100 TP25.5X27.25X6X1	700 300 -100 TP25.5X27.25X6X1
11							2000 800 -300 BB24X24X2.25X2.25 NS 227'-0 1/2"	1500 500 -400 BB24X24X1.5X1.5 NS 227'-0 1/2"	800 300 -100 TP25.5X27.25X6X1 227'-0 1/2"	700 300 -100 TP25.5X27.25X6X1 227'-0 1/2"
10							2300 800 -200 BB24X24X2.25X2.25 NS 208'-7"	1600 600 0 BB24X24X1.5X1.5 208'-7"	800 400 -200 TP25.5X27.25X6X1 208'-7"	800 400 -100 TP25.5X27.25X6X1 208'-7"

TYPICAL COLUMN SCHEDULE NOTES:
1. FOR TYPICAL COLUMN SCHEDULE NOTES SEE S5-1001.

DEPT OF BLDGS 121186251 Job Number
ES273511282 Scan Code

HUDSON YARDS - RETAIL PODIUM AND TOWER A

500 WEST 33RD STREET
New York, NY

Client
Related Companies
60 Columbus Circle
New York, NY 10023
TEL: 212.801.1000 FAX: 212.801.1048

Oxford Properties Group
320 Park Avenue, 17th Floor
New York, NY 10022
TEL: 212.986.7514 FAX: 212.986.7510

Architect
Kohn Pedersen Fox Associates
11 West 42nd Street
New York, New York 10036
TEL: 212.977.6500 FAX: 212.956.2526

Structural Engineer
Thornton Tomasetti, Inc.
51 Madison Avenue
New York, New York 10010
TEL: 917.661.7800 FAX: 718.661.7801

Mechanical, Electrical, Plumbing, Fire Protection
Jaros Baum & Bolles Consulting Engineers
80 Pine Street
New York, NY 10013
TEL: 212.530.9300 FAX: 212.269.5894

Retail Interior Design & Planning
Elkus-Manfredi
300 A Street
Boston, MA 02210
TEL: 617.426.1300

No.	Description	Date
2	D.O.B. AMENDMENT #2	10/15/2016
1	D.O.B. BUILDING PERMIT FILING	12/10/2014

Key Plan

09 06 03 08 05 02 07 04 01

Issue Date: 12/10/2014
Project No. N11328.00
Drawn By: Author
Sheet Number: HYE -TA -S5-2003

STATE OF NEW YORK · MICHAEL J. SQUARZINI · LICENSED PROFESSIONAL ENGINEER · No. 080840

Damian Titus
NYC Buildings
APPROVED
Under Directive 2 of 1975
AMENDED APPLICATION
Date: 05/03/2017
NYC Development Hub

Drawing Title
COLUMN SCHEDULE III FLOORS 10-22

Drawing Number: **S5-2003**
B-Scan Drawing Number: S-720.01
SHEET 356 OF 443

0 4' 8' 16'
N

© 2013 KOHN PEDERSEN FOX ASSOCIATES PC. All rights reserved.

S5-2003
10/17/2016 4:01:13 PM
COLUMN SCHEDULE III FLOORS 10-22
P:\NY1\Projects\N11328.00\Drawings\Structural\Record\Issued\2016-10-16 - D.O.B. Amendment No.2\Revit - Rev. Removed\HYTA TYP detail_Col.Schedule.rvt

DEPT OF BLDGS 121186251 Job Number
ES604233465 Scan Code

COLUMN SCHEDULE I FLOORS 23-37

FLOOR \ COLUMN MARK	B/13.2 B/13.1	C/13.2 C/13.1	D/13.2 D/13.1	[illegible]/13.2 [illegible]/13.1	F/13.2 F/13.1	G/13.2 G/13.1	DS/13.2 DS/13.1	H/13.2	J/13.2	K/13.2	L/13.2
37	4600 1200 -900 BW28X18X6X4 NS	3800 1000 -700 W14x730 NS	3600 900 -500 W14x730 NS	3500 800 -700 W14x730 NS	1600 400 -400 W14x370 NS		2800 600 -2100 W14x730 NS				
36	4700 1200 -900 BW28X18X6X4 NS 641'-0 1/2"	3900 1000 -600 W14x730 NS 641'-0 1/2"	3700 900 -500 W14x730 NS 641'-0 1/2"	3600 800 -600 W14x730 NS 641'-0 1/2"	1700 400 -300 W14x370 NS 641'-0 1/2"		3000 600 -2000 W14x730 NS 641'-0 1/2"				
35	4800 1200 -800 BW28X18X6X4 NS	4000 1000 -500 W14x730 NS	3800 900 -400 W14x730 NS	3700 800 -600 W14x730 NS	1800 400 -200 W14x370 NS		3100 600 -2000 W14x730 NS				
34	4900 1200 -700 BW28X18X6X4 NS 614'-0 1/2"	4200 1000 -500 W14x730 NS 614'-0 1/2"	3900 900 -300 W14x730 NS 614'-0 1/2"	3800 900 -500 W14x730 NS 614'-0 1/2"	1900 400 -200 W14x370 NS 614'-0 1/2"		3200 700 -1900 W14x730 NS 614'-0 1/2"				
33	5000 1200 -700 BW28X18X6X4 NS	4300 1000 -400 W14x730 NS	4100 1000 -300 W14x730 NS	3900 900 -400 W14x730 NS	2000 400 -100 W14x370 NS		3300 700 -1800 W14x730+1"PL NS				
32	5100 1200 -600 BW28X18X6X4 NS 587'-0 1/2"	4400 1000 -300 W14x730 NS 587'-0 1/2"	4200 1000 -200 W14x730 NS 587'-0 1/2"	4000 900 -400 W14x730 NS 587'-0 1/2"	2100 400 -100 W14x370 NS 587'-0 1/2"		3400 700 -1800 W14x730+1"PL NS 587'-0 1/2"				
31	5200 1300 -500 BW28X18X6X4 NS	4500 1100 -300 W14x730+1"PL NS	4300 1000 -100 W14x730 NS	4100 900 -300 W14x730 NS	2200 500 0 W14x398 NS		3500 700 -1700 W14x730+1"PL NS				
30	5400 1300 -500 BW28X18X6X4 NS 560'-0 1/2"	4600 1100 -200 W14x730+1"PL NS 560'-0 1/2"	4400 1000 -100 W14x730 NS 560'-0 1/2"	4200 900 -200 W14x730 NS 560'-0 1/2"	2300 500 0 W14x398 NS 560'-0 1/2"		3600 700 -1600 W14x730+1"PL NS 560'-0 1/2"				
29	5500 1300 -400 BW28X20X6X4 NS	4700 1100 -100 W14x730+1"PL NS	4500 1000 0 W14x730+1"PL NS	4300 900 -200 W14x730+1"PL NS	2400 500 0 W14x426 NS		3700 700 -1600 W14x730+1"PL NS				
28	5600 1300 -300 BW28X20X6X4 NS 533'-0 1/2"	4800 1100 -100 W14x730+1"PL NS 533'-0 1/2"	4600 1000 0 W14x730+1"PL NS 533'-0 1/2"	4400 900 -100 W14x730+1"PL NS 533'-0 1/2"	2500 500 0 W14x426 NS 533'-0 1/2"	100 100 0 W14x90 NS 533'-0 1/2"	3800 700 -1500 W14x730+1"PL NS 533'-0 1/2"				
27	5700 1300 -300 BW28X20X6X4 NS	4900 1100 0 W14x730+1"PL NS	4700 1000 0 W14x730+1"PL NS	4500 1000 0 W14x730+1"PL NS	2600 500 0 W14x500 NS	200 100 0 W14x90 NS	3900 800 -1500 W14x730+1"PL NS				
26	5800 1300 -200 BW28X20X6X4 NS 506'-0 1/2"	5000 1100 0 W14x730+1"PL NS 506'-0 1/2"	4800 1100 0 W14x730+1"PL NS 506'-0 1/2"	4600 1000 0 W14x730+1"PL NS 506'-0 1/2"	2700 500 0 W14x500 NS 506'-0 1/2"	300 100 0 W14x90 NS 506'-0 1/2"	4000 800 -1400 W14x730+1"PL NS 506'-0 1/2"				
25	5900 1300 -100 BW28X22X6X4 NS	5100 1100 0 BW28X18X6X4 NS	4900 1100 0 BW28X18X6X4 NS	4700 1000 0 BW28X18X6X4 NS	2800 600 0 W14x550 NS	400 200 0 W14x90 NS	4100 900 -1300 BW28X18X6X4 NS				
24	6000 1400 -100 BW28X24X6X5 NS 5/8" FILLET 533'-0 1/2"	5300 1200 0 BW28X18X6X4 NS 474'-4 1/2"	5000 1100 0 BW28X18X6X4 NS 474'-4 1/2"	4900 1000 0 BW28X18X6X4 NS 474'-4 1/2"	2900 600 0 W14x550 NS 474'-4 1/2"	500 200 0 W14x90 NS 474'-4 1/2"	4200 900 -1300 BW28X18X6X4 NS 474'-4 1/2"				
23	6300 1400 0 BW28X24X6X5 NS 5/8" FILLET	5500 1200 0 BW28X20X6X4 NS	5200 1200 0 BW28X20X6X4 NS	5000 1100 0 BW28X20X6X4 NS	3100 700 0 W14x605 NS	600 300 0 W14x159 NS	4400 1000 -1200 BW28X22X6X4 NS				

FLOOR \ COLUMN MARK	A.6/13.3	FS/13.3	HS/13.3	A/2S AB/2S	CS/2S	FS/13.9	HS/13.9	B/14	C/14	C.1/14	D/14
37	4800 1300 -700 BW24.625X22X6X4 NS	1700 400 -600 W14x455 EW		5900 1600 -600 BW24.625X22X6X4 EW		3100 800 -600 W14x730 EW		13200 3500 0 BS28X24 NS		10200 3100 0 BB24X28X6X8 EW	
36	4900 1300 -700 BW24.625X22X6X4 NS 641'-0 1/2"	1800 400 -600 W14x455 EW 641'-0 1/2"		6000 1700 -600 BW24.625X22X6X4 EW 641'-0 1/2"		3200 800 -600 W14x730 EW 641'-0 1/2"		13700 3600 0 BS28X24 NS 644'-0 1/2"		10500 3100 0 BB24X28X6X8 EW 644'-0 1/2"	
35	5000 1300 -600 BW24.625X22X6X4 NS	1900 400 -500 W14x455 EW		6100 1700 -500 BW24.625X22X6X4 EW		3300 800 -500 W14x730 EW		14200 3700 0 BS28X24 NS		10800 3200 0 BB24X28X6X9 EW	
34	5100 1300 -500 BW24.625X22X6X4 NS 614'-0 1/2"	2000 400 -500 W14x455 EW 614'-0 1/2"		6300 1700 -400 BW24.625X22X6X4 EW 614'-0 1/2"		3400 900 -400 W14x730 EW 614'-0 1/2"		14700 3800 0 BS28X24 NS 617'-0 1/2"		11000 3200 0 BB24X28X6X9 EW 617'-0 1/2"	
33	5100 1300 -500 BW24.625X22X6X4 NS	2100 400 -400 W14x455 EW		6400 1700 -300 BW24.625X22X6X4 EW		3500 900 -400 W14x730 EW		15200 3900 0 BS28X26 NS		11300 3300 0 BB24X28X6X10 EW	
32	5200 1300 -400 BW24.625X22X6X4 NS 587'-0 1/2"	2200 400 -400 W14x455 EW 587'-0 1/2"		6500 1700 -200 BW24.625X22X6X4 EW 587'-0 1/2"		3600 900 -300 W14x730 EW 587'-0 1/2"		15700 4000 0 BS28X26 NS 590'-0 1/2"		11500 3300 0 BB24X28X6X10 EW 590'-0 1/2"	
31	5300 1300 -400 BW24.625X22X6X4 NS	2300 500 -300 W14x455 EW		6700 1700 -200 BW24.625X24X6X4 EW		3700 900 -200 W14x730+1"PL EW		16300 4100 0 BS30X28 NS		11800 3300 0 BS28X24 NS	
30	5400 1300 -300 BW24.625X22X6X4 NS 560'-0 1/2"	2400 500 -300 W14x455 EW 560'-0 1/2"		6800 1800 -100 BW24.625X24X6X4 EW 560'-0 1/2"		3800 1000 -200 W14x730+1"PL EW 560'-0 1/2"		16800 4200 0 BS30X28 NS 563'-0 1/2"		12100 3400 0 BS28X24 NS 563'-0 1/2"	
29	5500 1300 -300 BW24.625X22X6X4 NS	2400 500 -200 W14x455 EW		6900 1800 0 BW24.625X24X6X4 EW		3900 1000 -100 W14x730+1"PL EW		17400 4300 -300 BS30X30 NS		12300 3400 0 BS28X24 NS	
28	5600 1300 -200 BW24.625X22X6X4 NS 533'-0 1/2"	2500 500 -200 W14x455 EW 533'-0 1/2"		7100 1800 0 BW24.625X24X6X4 EW 533'-0 1/2"		4000 1000 -100 W14x730+1"PL EW 533'-0 1/2"		18100 4400 -1100 BS30X30 NS 536'-0 1/2"		12500 3500 0 BS28X24 NS 536'-0 1/2"	
27	5700 1400 -100 BW24.625X22X6X4 NS	2600 500 -100 W14x500 EW		7200 1800 0 BW24.625X24X6X4 EW		4100 1000 0 W14x730+1"PL EW		18700 4500 -1800 BS30X34 NS		12700 3500 0 BS28X26 NS	
26	5800 1400 -100 BW24.625X22X6X4 NS 506'-0 1/2"	2700 500 -100 W14x500 EW 506'-0 1/2"		7300 1800 0 BW24.625X24X6X4 EW 506'-0 1/2"		4200 1000 0 W14x730+1"PL EW 506'-0 1/2"		19300 4600 -2600 BS30X34 NS 509'-0 1/2"		12900 3600 -200 BS28X26 NS 509'-0 1/2"	
25	5900 1400 0 BW24.625X26X6X4 NS	2800 600 0 W14x730 EW		7500 1800 0 BW24.625X28X6X4 EW 487'-0 1/2"		4300 1200 0 BW24.625X18X6X4 EW		20000 4700 -3400 BS30X36-A NS 495'-6 1/2"		13100 3600 -600 BS28X28 NS	
24	6000 1400 0 BW24.625X26X6X4 NS 474'-4 1/2"	2900 600 0 W14x730 EW 474'-4 1/2"		7600 1900 0 BW24.625X28X6X4 EW 474'-4 1/2"		4400 1200 0 BW24.625X18X6X4 EW 474'-4 1/2"		20600 4800 -4200 BS30X36-A NS 5/8" PJP 477'-4 1/2"		13300 3600 -1000 BS28X28 NS 477'-4 1/2"	
23	6200 1400 0 BW24.625X28X6X11 NS	3000 700 0 W14x730 EW		7800 2000 0 BW24.625X28X6X10 EW		4600 1300 0 BW24.625X20X6X4 EW		21400 5100 -5300 BS30X36-A NS 5/8" PJP 459'-4 1/2"		13900 3800 -1100 BS30X30 NS 459'-4 1/2"	

FLOOR \ COLUMN MARK	D.1/14	E/14	E.1/14	F/14	F.1/14	F.6/14	A.9S/14	G/14	H/14	J/14	K/14	A.4/1S	A.9/1S	B.9/1S	C.95/1S	BS/1S	B/14.3	C.1/14.3	D.1/14.3	F.1/14.5
37	7700 2600 0 BW24.625X28X6X4 EW		9300 2400 0 BB24X28X6X6 EW			5000 1200 0 W14x730+1"PL EW														
36	7900 2600 0 BW24.625X28X6X4 EW 644'-0 1/2"		9600 2400 0 BB24X28X6X6 EW 641'-0 1/2"			5000 1200 0 W14x730+1"PL EW 644'-0 1/2"														
35	8100 2600 0 BW24.625X28X6X4 EW		9800 2500 0 BB24X28X6X6 EW 5/8" PJP			5100 1200 0 W14x730+1"PL EW														
34	8400 2700 0 BW24.625X28X6X4 EW 617'-0 1/2"		10100 2500 0 BB24X28X6X6 EW 5/8" PJP 614'-0 1/2"			5200 1200 0 W14x730+1"PL EW 617'-0 1/2"														
33	8600 2700 0 BW24.625X28X6X5 EW		10400 2500 0 BB24X28X6X8 EW			5300 1200 0 W14x730+1"PL EW														
32	8800 2800 0 BW24.625X28X6X5 EW 590'-0 1/2"		10600 2600 0 BB24X28X6X8 EW 587'-0 1/2"			5400 1200 0 W14x730+1"PL EW 590'-0 1/2"														
31	9100 2800 0 BB24X28X6X6 EW		10800 2600 0 BB24X28X6X10 EW			5500 1200 0 BW24.625X18X6X4 EW	200 100 0 W12X96 EW													
30	9400 2900 0 BB24X28X6X6 EW 563'-0 1/2"		11000 2700 0 BB24X28X6X10 EW 560'-0 1/2"			5600 1200 0 BW24.625X18X6X4 EW 563'-0 1/2"	300 200 0 W12X96 EW 560'-0 1/2"													
29	9700 2900 0 BB24X28X6X8 EW		11200 2700 0 BB24X28X6X11 EW			5700 1200 0 BW24.625X20X6X4 EW	400 200 0 W12X190 EW													
28	10000 2900 0 BB24X28X6X8 EW 536'-0 1/2"		11300 2800 0 BB24X28X6X11 EW 533'-0 1/2"			5800 1200 -200 BW24.625X20X6X4 EW 536'-0 1/2"	600 200 0 W12X190 EW 533'-0 1/2"													
27	10300 3000 0 BB24X28X6X10 EW		11500 2800 -200 BS28X24 NS			5900 1200 -800 BW24.625X24X6X4 EW	700 200 0 W12X190 EW													
26	10600 3000 0 BB24X28X6X10 EW 509'-0 1/2"		11700 2800 -700 BS28X24 NS 506'-0 1/2"			6000 1200 -1300 BW24.625X24X6X4 EW 509'-0 1/2"	800 300 0 W12X190 EW 506'-0 1/2"													
25	10900 3100 -200 BS28X24 NS		11900 2900 -1100 BS28X28 NS			6100 1300 -1900 BW24.625X28X6X5 EW	1000 500 0 W14x342 EW													
24	11100 3100 -600 BS28X24 NS 477'-4 1/2"		12000 2900 -1700 BS28X28 NS 474'-4 1/2"			6300 1300 -2500 BW24.625X28X6X5 EW 477'-4 1/2"	1100 500 0 W14x342 EW 474'-4 1/2"													
23	11900 3300 -700 BS28X26 NS		12300 3100 -2300 BS28X28 NS 459'-4 1/2"			6700 1400 -3000 BB24X28X6X8 EW	1400 600 0 W14x455 EW													

TYPICAL COLUMN SCHEDULE NOTES:
1. FOR TYPICAL COLUMN SCHEDULE NOTES SEE S5-1001.

HUDSON YARDS - RETAIL PODIUM AND TOWER A
500 WEST 33RD STREET
New York, NY

Client
Related Companies
60 Columbus Circle
New York, NY 10023
TEL: 212.801.1000 FAX: 212.801.1048

Oxford Properties Group
320 Park Avenue, 17th Floor
New York, NY 10022
TEL: 212.986.7514 FAX: 212.986.7510

Architect
Kohn Pedersen Fox Associates
11 West 42nd Street
New York, New York 10036
TEL: 212.977.6500 FAX: 212.956.2526

Structural Engineer
Thornton Tomasetti, Inc.
51 Madison Avenue
New York, New York 10010
TEL: 917.661.7800 FAX: 718.661.7801

Mechanical, Electrical, Plumbing, Fire Protection
Jaros Baum & Bolles Consulting Engineers
80 Pine Street
New York, NY 10013
TEL: 212.530.9300 FAX: 212.269.5894

Retail Interior Design & Planning
Elkus-Manfredi
300 A Street
Boston, MA 02210
TEL: 617.426.1300

No.	Description	Date
2	D.O.B. AMENDMENT #2	10/15/2016
1	D.O.B. BUILDING PERMIT FILING	12/10/2014

Key Plan

09 06 03
08 05 02
07 04 01

Issue Date: 12/10/2014
Project No. N11328.00
Drawn By Author
Sheet Number

STATE OF NEW YORK · MICHAEL J. SQUARZINI · LICENSED PROFESSIONAL ENGINEER · No. 080840

HYE -TA -S5-2004

Drawing Title
COLUMN SCHEDULE I FLOORS 23-37

Damian Titus
NYC Buildings
APPROVED
Under Directive 2 of 1975
AMENDED APPLICATION
Date: 05/03/2017
NYC Development Hub

0 4' 8' 16'
N

Drawing Number
S5-2004
B-Scan Drawing Number
S-721.01
SHEET 357 OF 443

© 2013 KOHN PEDERSEN FOX ASSOCIATES PC. All rights reserved.

S5-2004
10/17/2016 4:01:16 PM
COLUMN SCHEDULE I FLOORS 23-37
P:\NY1\Projects\N11328.00\Drawings\Structural\Record\Issued\2016-10-16 - D.O.B. Amendment No.2\Revit - Rev. Removed\HYTA TYP detail_Col.Schedule.rvt

DEPT OF BLDGS 121186251 Job Number ES868056661 Scan Code

FLOOR \ COLUMN MARK	A.9S/14.5	FS/14.6	HS/14.6	A/14.7 AB/14.7	B.0/14.7	C.1/14.7	C.95/14.7	D.1/14.7	CS/14.75	B/15	C.1/15	C.9/15	C.95/15.0
37		2700 700 0 W14x500 EW		4000 1200 0 W14x665 EW						10700 4000 0 BB24X28X6X8 EW	9200 3800 0 BB24X28X6X7 EW		
36		2800 700 0 W14x500 EW 641'-0 1/2"		4200 1200 0 W14x665 EW 641'-0 1/2"						11000 4100 0 BB24X28X6X8 EW 644'-0 1/2"	9400 3900 0 BB24X28X6X7 EW 644'-0 1/2"		
35		2900 700 0 W14x500 EW		4300 1200 0 W14x665 EW						11300 4100 0 BB24X28X6X8 EW	9700 3900 0 BB24X28X6X7 EW		
34		3000 800 0 W14x500 EW 614'-0 1/2"		4400 1200 0 W14x665 EW 614'-0 1/2"						11700 4200 0 BB24X28X6X8 EW 617'-0 1/2"	10000 4000 0 BB24X28X6X7 EW 617'-0 1/2"		
33		3100 800 0 W14x500 EW		4500 1200 0 W14x665 EW						12000 4200 0 BB24X28X6X9 EW	10200 4000 0 BB24X28X6X8 EW		
32		3200 800 0 W14x500 EW 587'-0 1/2"		4600 1300 0 W14x665 EW 587'-0 1/2"						12400 4300 0 BB24X28X6X9 EW 590'-0 1/2"	10500 4100 0 BB24X28X6X8 EW 590'-0 1/2"		
31	100 100 0 W12X152 EW	3300 800 0 W14x550 EW		4700 1300 0 W14x730 EW						12700 4300 0 BB24X28X6X11 EW	10800 4200 0 BB24X28X6X9 EW		
30	200 200 0 W12X152 EW 560'-0 1/2"	3400 900 0 W14x550 EW 560'-0 1/2"		4800 1300 0 W14x730 EW 560'-0 1/2"						13100 4400 0 BB24X28X6X11 EW 563'-0 1/2"	11000 4200 0 BB24X28X6X9 EW 563'-0 1/2"		
29	300 200 0 W12X152 EW	3500 900 0 W14x550 EW		5000 1300 0 W14x730 EW						13500 4400 0 BS28X24 NS	11300 4200 0 BB24X28X6X9 EW		
28	400 200 0 W12X152 EW 533'-0 1/2"	3600 900 0 W14x550 EW 533'-0 1/2"		5100 1300 0 W14x730 EW 533'-0 1/2"						13900 4400 0 BS28X24 NS 536'-0 1/2"	11500 4300 0 BB24X28X6X9 EW 536'-0 1/2"		
27	500 200 0 W12X152 EW	3700 1000 0 W14x665 EW		5200 1300 0 W14x730 EW						14400 4500 0 BS28X26 NS	11800 4400 0 BB24X28X6X11 EW		
26	600 300 0 W12X152 EW 506'-0 1/2"	3800 1000 0 W14x665 EW 506'-0 1/2"		5300 1400 0 W14x730 EW 506'-0 1/2"						14800 4500 0 BS28X26 NS 509'-0 1/2"	12200 4400 0 BB24X28X6X11 EW 509'-0 1/2"		
25	700 300 0 W12X305 EW	3800 1000 0 W14x730+1"PL EW		5400 1500 0 BW24.625X18X6X4 EW 487'-6 1/2"						15300 4700 0 BS28X28 NS	12500 4500 0 BS28X24 NS		
24	800 400 0 W12X305 EW 474'-4 1/2"	3900 1100 0 W14x730+1"PL EW 474'-4 1/2"		5600 1500 0 BW24.625X18X6X4 EW 474'-4 1/2"						15800 4700 0 BS28X28 NS 477'-4 1/2"	12700 4500 0 BS28X24 NS 477'-4 1/2"		
23	1000 500 0 W14x342 EW	4100 1100 0 W14x730+1"PL EW		5800 1600 0 BW24.625X20X6X4 EW						16400 4900 0 BS30X30 NS 459'-4 1/2"	13200 4600 0 BS28X26 NS		
FLOOR \ COLUMN MARK	A.9S/14.5	FS/14.6	HS/14.6	A/14.7 AB/14.7	B.0/14.7	C.1/14.7	C.95/14.7	D.1/14.7	CS/14.75	B/15	C.1/15	C.9/15	C.95/15.0

FLOOR \ COLUMN MARK	D.1/15	D.8/15	E.1/15	E.8/15	F.1/15	F.6/15	F.9/15	H/15	J/15	K/15	A.9S/15	FS/15.1	HS/15.1
37	9100 3600 0 BW24.625X28X6X7 EW		6900 2300 0 BW24.625X24X6X4 EW			3200 800 0 W14x550 EW						4300 1200 0 W14x730 EW	
36	9300 3600 0 BW24.625X28X6X7 EW 644'-0 1/2"		7000 2300 0 BW24.625X24X6X4 EW 641'-0 1/2"			3300 800 0 W14x550 EW 644'-0 1/2"						4300 1200 0 W14x730 EW 641'-0 1/2"	
35	9500 3700 0 BW24.625X28X6X7 EW		7200 2400 0 BW24.625X24X6X4 EW			3400 800 0 W14x550 EW						4300 1200 0 W14x730 EW	
34	9600 3700 0 BW24.625X28X6X7 EW 617'-0 1/2"		7400 2400 0 BW24.625X24X6X4 EW 614'-0 1/2"			3500 800 0 W14x550 EW 617'-0 1/2"						4300 1200 0 W14x730 EW 614'-0 1/2"	
33	9800 3800 0 BW24.625X28X6X7 EW		7500 2500 0 BW24.625X24X6X4 EW			3600 800 0 W14x550 EW						4300 1200 0 W14x730 EW	
32	10000 3800 0 BW24.625X28X6X7 EW 590'-0 1/2"		7700 2500 0 BW24.625X24X6X4 EW 587'-0 1/2"			3700 800 0 W14x550 EW 590'-0 1/2"						4300 1200 0 W14x730 EW 587'-0 1/2"	
31	10200 3900 0 BB24X28X6X7 EW		7900 2600 0 BW24.625X26X6X4 EW			3800 800 0 W14x665 EW					200 100 0 W12X96 EW	4300 1200 0 W14x730 EW	
30	10300 3900 0 BB24X28X6X7 EW 563'-0 1/2"		8100 2700 0 BW24.625X26X6X4 EW 560'-0 1/2"			3900 900 0 W14x665 EW 563'-0 1/2"					300 200 0 W12X96 EW 560'-0 1/2"	4300 1200 0 W14x730 EW 560'-0 1/2"	
29	10500 4000 0 BB24X28X6X7 EW		8200 2700 0 BW24.625X28X6X4 EW			4000 900 0 W14x730 EW					400 200 0 W12X170 EW	4300 1200 0 W14x730 EW	
28	10700 4000 0 BB24X28X6X7 EW 536'-0 1/2"		8400 2700 0 BW24.625X28X6X4 EW 533'-0 1/2"			4100 900 0 W14x730 EW 536'-0 1/2"					500 300 0 W12X170 EW 533'-0 1/2"	4400 1200 0 W14x730 EW 533'-0 1/2"	
27	10900 4100 0 BB24X28X6X9 EW		8600 2800 0 BW24.625X28X6X5 EW			4200 900 0 W14x730+1"PL EW					600 300 0 W12X170 EW	4400 1200 0 W14x730 EW	
26	11000 4200 0 BB24X28X6X9 EW 509'-0 1/2"		8800 2900 0 BW24.625X28X6X5 EW 506'-0 1/2"			4300 1000 0 W14x730+1"PL EW 509'-0 1/2"					700 300 0 W12X170 EW 506'-0 1/2"	4400 1200 0 W14x730 EW 506'-0 1/2"	
25	11300 4200 0 BS28X24 NS		9000 2900 0 BB24X28X6X8 EW			4500 1000 0 BW24.625X20X6X4 EW					800 300 0 W12X279 EW	4400 1200 0 BW24.625X18X6X4 EW	
24	11400 4200 0 BS28X24 NS 477'-4 1/2"		9200 3000 0 BB24X28X6X8 EW 474'-4 1/2"			4500 1000 0 BW24.625X20X6X4 EW 477'-4 1/2"					1000 300 0 W12X279 EW 474'-4 1/2"	4400 1200 0 BW24.625X18X6X4 EW 474'-4 1/2"	
23	11700 4400 0 BS28X24 NS		9400 3100 0 BB24X28X6X8 EW			4600 1000 -200 BW24.625X22X6X4 EW					1200 500 0 W14x342 EW	4400 1200 0 BW24.625X18X6X4 EW	
FLOOR \ COLUMN MARK	D.1/15	D.8/15	E.1/15	E.8/15	F.1/15	F.6/15	F.9/15	H/15	J/15	K/15	A.9S/15	FS/15.1	HS/15.1

FLOOR \ COLUMN MARK	A/15.2 AB/15.2	CS/15.3	A.9S/15.4	HS/15.7	FS/15.9	A/15.95 AB/15.95	B/16	C.1/16	C.9/16	C.95/16.0	D.1/16	D.8/16	D.9/16	E.1/16	E.7/16	E.8/16
37	5700 1700 0 BW24.625X18X6X4 EW				4800 1100 -1000 BW24.625X20X6X4 EW	8600 2500 0 BW24.625X26X6X4 EW	13500 4100 0 BS28X24 NS	9300 3000 0 BB24X28X6X6 EW			7300 2700 0 BW24.625X28X6X5 EW			7300 1900 0 BW24.625X28X6X4 EW		
36	5800 1700 0 BW24.625X18X6X4 EW 641'-0 1/2"				4900 1100 -900 BW24.625X20X6X4 EW 641'-0 1/2"	8800 2600 0 BW24.625X26X6X4 EW 641'-0 1/2"	14100 4200 0 BS28X24 NS 644'-0 1/2"	9500 3000 0 BB24X28X6X6 EW 644'-0 1/2"			7500 2700 0 BW24.625X28X6X5 EW 644'-0 1/2"			7700 2000 0 BW24.625X28X6X4 EW 644'-0 1/2"		
35	5900 1700 0 BW24.625X18X6X4 EW				5000 1100 -800 BW24.625X20X6X4 EW	8900 2600 0 BW24.625X26X6X4 EW	14500 4300 0 BS28X24 NS	9800 3000 0 BB24X28X6X6 EW			7700 2800 0 BW24.625X28X6X5 EW			8000 2100 0 BW24.625X28X6X4 EW		
34	6000 1700 0 BW24.625X18X6X4 EW 614'-0 1/2"				5100 1100 -800 BW24.625X20X6X4 EW 614'-0 1/2"	9000 2600 0 BW24.625X26X6X4 EW 614'-0 1/2"	15000 4400 0 BS28X24 NS 617'-0 1/2"	10000 3100 0 BB24X28X6X6 EW 617'-0 1/2"			7900 2800 0 BW24.625X28X6X5 EW 617'-0 1/2"			8300 2100 0 BW24.625X28X6X4 EW 617'-0 1/2"		
33	6200 1800 0 BW24.625X18X6X4 EW				5200 1100 -700 BW24.625X20X6X4 EW	9100 2600 0 BW24.625X28X6X4 EW	15600 4400 0 BS28X26 NS	10300 3100 0 BB24X28X6X7 EW			8100 2800 0 BW24.625X28X6X5 EW			8600 2200 0 BB24X28X6X5 EW		
32	6300 1800 0 BW24.625X18X6X4 EW 587'-0 1/2"				5300 1200 -700 BW24.625X20X6X4 EW 587'-0 1/2"	9300 2600 0 BW24.625X28X6X4 EW 587'-0 1/2"	16100 4500 0 BS28X26 NS 590'-0 1/2"	10600 3100 0 BB24X28X6X7 EW 590'-0 1/2"			8300 2900 0 BW24.625X28X6X5 EW 590'-0 1/2"			8800 2200 0 BB24X28X6X5 EW 590'-0 1/2"		
31	6400 1800 0 BW24.625X18X6X4 EW				5400 1200 -600 BW24.625X20X6X4 EW	9400 2700 0 BW24.625X28X6X4 EW	16600 4600 0 BS28X28 NS	10900 3200 0 BB24X28X6X9 EW			8500 2900 0 BB24X28X6X6 EW			9000 2300 0 BB24X28X6X7 EW		
30	6500 1800 0 BW24.625X18X6X4 EW 560'-0 1/2"				5500 1200 -500 BW24.625X20X6X4 EW 560'-0 1/2"	9500 2700 0 BW24.625X28X6X4 EW 560'-0 1/2"	17200 4700 0 BS28X28 NS 563'-0 1/2"	11200 3200 0 BB24X28X6X9 EW 563'-0 1/2"			8700 3000 0 BB24X28X6X6 EW 563'-0 1/2"			9200 2300 0 BB24X28X6X7 EW 563'-0 1/2"		
29	6600 1800 0 BW24.625X20X6X4 EW				5600 1200 -500 BW24.625X20X6X4 EW	9700 2700 0 BW24.625X28X6X5 EW	17800 4800 0 BS30X28 NS	11500 3200 0 BB24X28X6X10 EW			9000 3000 0 BB24X28X6X7 EW			9300 2300 0 BB24X28X6X8 EW		
28	6700 1800 0 BW24.625X20X6X4 EW 533'-0 1/2"				5700 1300 -400 BW24.625X20X6X4 EW 533'-0 1/2"	9800 2700 0 BW24.625X28X6X5 EW 533'-0 1/2"	18400 4900 0 BS30X28 NS 536'-0 1/2"	11800 3300 0 BB24X28X6X10 EW 536'-0 1/2"			9300 3000 0 BB24X28X6X7 EW 536'-0 1/2"			9400 2300 0 BB24X28X6X8 EW 536'-0 1/2"		
27	6800 1800 0 BW24.625X20X6X4 EW				5800 1300 -300 BW24.625X26X6X4 EW	9900 2700 0 BW24.625X28X6X6 EW	19000 5000 0 BS30X34 NS	12200 3300 0 BS28X24 NS			9600 3100 0 BB24X28X6X9 EW			9500 2300 0 BB24X28X6X10 EW		
26	7000 1900 0 BW24.625X20X6X4 EW 506'-0 1/2"				5900 1300 -300 BW24.625X26X6X4 EW 506'-0 1/2"	10100 2700 0 BW24.625X28X6X6 EW 506'-0 1/2"	19600 5100 0 BS30X34 NS 509'-0 1/2"	12500 3300 0 BS28X24 NS 509'-0 1/2"			9900 3100 0 BB24X28X6X9 EW 509'-0 1/2"			9600 2400 -200 BB24X28X6X10 EW 509'-0 1/2"		
25	7100 2000 0 BW24.625X24X6X4 EW 487'-6 1/2"				6000 1300 -200 BW24.625X26X6X4 EW	10200 2900 0 BW24.625X28X6X10 EW 487'-6 1/2"	20300 5300 0 BS30X36 NS 495'-6 1/2"	12900 3500 0 BS28X26 NS			10100 3200 0 BB24X28X6X11 EW			3900 1400 0 BW24.625X18X6X4 EW BS-1	BS-1	
24	7200 2000 0 BW24.625X24X6X4 EW 474'-4 1/2"				6100 1300 -100 BW24.625X26X6X4 EW 474'-4 1/2"	10300 2900 0 BW24.625X28X6X10 EW 474'-4 1/2"	20800 5400 -200 BS30X36 NS 477'-4 1/2"	13200 3500 0 BS28X26 NS 477'-4 1/2"			10200 3200 0 BB24X28X6X11 EW 477'-4 1/2"			4000 1400 0 BW24.625X18X6X4 EW		
23	7400 2100 0 BW24.625X26X6X4 EW					10600 3000 0 BB24X28X6X7 EW	21700 5600 -600 BS30X36-A NS 459'-4 1/2"	13600 3600 0 BS28X26 NS	5400 2400 0 BW24.625X22X6X4 EW			7300 2500 0 BB24X28X6X4 EW				6000 1700 -1400 BB24X28X6X4 EW
FLOOR \ COLUMN MARK	A/15.2 AB/15.2	CS/15.3	A.9S/15.4	HS/15.7	FS/15.9	A/15.95 AB/15.95	B/16	C.1/16	C.9/16	C.95/16.0	D.1/16	D.8/16	D.9/16	E.1/16	E.7/16	E.8/16

TYPICAL COLUMN SCHEDULE NOTES:
1. FOR TYPICAL COLUMN SCHEDULE NOTES SEE S5-1001.

HUDSON YARDS - RETAIL PODIUM AND TOWER A

500 WEST 33RD STREET
New York, NY

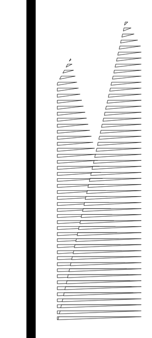

Client
Related Companies
60 Columbus Circle
New York, NY 10023
TEL: 212.801.1000 FAX: 212.801.1048

Oxford Properties Group
320 Park Avenue, 17th Floor
New York, NY 10022
TEL: 212.986.7514 FAX: 212.986.7510

Architect
Kohn Pedersen Fox Associates
11 West 42nd Street
New York, New York 10036
TEL: 212.977.6500 FAX: 212.956.2526

Structural Engineer
Thornton Tomasetti, Inc.
51 Madison Avenue
New York, New York 10010
TEL: 917.661.7800 FAX: 718.661.7801

Mechanical, Electrical, Plumbing, Fire Protection
Jaros Baum & Bolles Consulting Engineers
80 Pine Street
New York, NY 10013
TEL: 212.530.9300 FAX: 212.269.5894

Retail Interior Design & Planning
Elkus-Manfredi
300 A Street
Boston, MA 02210
TEL: 617.426.1300

No.	Description	Date
2	D.O.B. AMENDMENT #2	10/15/2016
1	D.O.B. BUILDING PERMIT FILING	12/10/2014

Key Plan

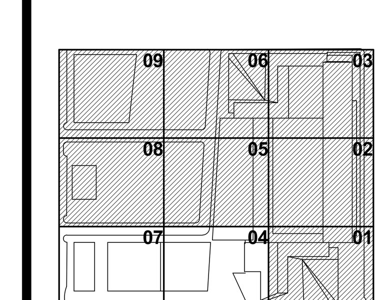

Issue Date: 12/10/2014
Project No. N11328.00
Drawn By Author
Sheet Number

STATE OF NEW YORK
MICHAEL J. SQUARZ
LICENSED PROFESSIONAL ENGINEER
No. 080340

HYE -TA -S5-2005

Drawing Title

COLUMN SCHEDULE II FLOORS 23-37

Damian Titus
NYC Buildings
APPROVED
Under Directive 2 of 1975
AMENDED APPLICATION
Date: 05/03/2017
NYC Development Hub

0 4' 8' 16'

N

Drawing Number
S5-2005
B-Scan Drawing Number
S-722.01

SHEET 358 OF 443

© 2013 KOHN PEDERSEN FOX ASSOCIATES PC. All rights reserved.

S5-2005
10/17/2016 4:01:19 PM
COLUMN SCHEDULE II FLOORS 23-37
P:\NY1\Projects\N11328.00\Drawings\Structural\Record\Issued\2016-10-16 - D.O.B. Amendment No.2\Revit - Rev. Removed\HYTA TYP detail_Col.Schedule.rvt

DEPT OF BLDGS 121186251 Job Number
ES578198897 Scan Code

TYPICAL COLUMN SCHEDULE NOTES:
1. FOR TYPICAL COLUMN SCHEDULE NOTES SEE S5-1001.

FLOOR \ COLUMN MARK	F.1/16	F.6/16	A.9S/16	G.6/16	H.8/16	K/16	CS/16.1	ES/16.7	A/3S AB/16.8	CS/16.8
37		4500 1100 0 W14x730 EW						2200 600 -700 W14x550 NS	4600 1400 0 W14x730 EW	
36		4500 1100 0 W14x730 EW 644'-0 1/2"						2300 600 -700 W14x550 NS 641'-0 1/2"	4700 1400 0 W14x730 EW 641'-0 1/2"	
35		4600 1100 0 W14x730 EW						2400 600 -600 W14x550 NS	4800 1400 0 W14x730 EW	
34		4700 1200 0 W14x730 EW 617'-0 1/2"						2500 600 -600 W14x550 NS 614'-0 1/2"	4900 1400 0 W14x730 EW 614'-0 1/2"	
33		4800 1200 0 W14x730 EW						2500 600 -500 W14x550 NS	5000 1400 0 W14x730 EW	
32		4900 1200 0 W14x730 EW 590'-0 1/2"						2600 600 -500 W14x550 NS 587'-0 1/2"	5000 1400 0 W14x730 EW 587'-0 1/2"	
31		5000 1200 0 BW24.625X18X6X4 EW	200 100 0 W12X136 EW					2700 600 -400 W14x550 NS	5100 1400 0 W14x730+1"PL EW	
30		5200 1300 0 BW24.625X18X6X4 EW 563'-0 1/2"	300 200 0 W12X136 EW 560'-0 1/2"					2700 600 -400 W14x550 NS 560'-0 1/2"	5200 1400 0 W14x730+1"PL EW 560'-0 1/2"	
29		5300 1300 -100 BW24.625X20X6X4 EW	400 200 0 W12X136 EW					2800 600 -400 W14x550 NS	5300 1500 0 BW24.625X20X6X4 EW 541'-0 1/2"	
28		5500 1300 -600 BW24.625X20X6X4 EW 536'-0 1/2"	500 200 0 W12X136 EW 533'-0 1/2"					2900 700 -300 W14x550 NS 533'-0 1/2"	5400 1500 0 BW24.625X20X6X4 EW 533'-0 1/2"	
27		5600 1400 -1900 BW24.625X24X6X4 EW	600 200 0 W12X136 EW					3000 700 -300 W14x550 NS	5500 1500 0 BW24.625X20X6X4 EW	
26		5800 1400 -1500 BW24.625X24X6X4 EW 509'-0 1/2"	700 200 0 W12X136 EW 506'-0 1/2"					3000 700 -200 W14x550 NS 506'-0 1/2"	5600 1500 0 BW24.625X20X6X4 EW 506'-0 1/2"	
25		5900 1400 -2000 BW24.625X28X6X4 EW	800 300 0 W14x257 EW 487'-6 1/2"					3100 700 -200 W14x665 NS	5700 1600 0 BW24.625X20X6X4 EW	
24		5600 1300 -2800 BW24.625X28X6X4 EW 477'-0 1/2"	900 300 0 W14x257 EW 474'-4 1/2"					3200 700 -100 W14x665 NS 474'-4 1/2"	5800 1600 0 BW24.625X20X6X4 EW 474'-4 1/2"	
23			2200 700 0 W14x550 EW	1900 500 0 W14x730+1"PL EW	3800 1100 0 BW24.625X28X6X6 EW				5900 1700 0 BW24.625X28X6X4 EW	

FLOOR \ COLUMN MARK	B/17	C.1/17	C.9/17	D.8/17	E.8/17	F.9/17.0	G.6/17	H.8/17	JS/17.2
37									
36									
35									
34									
33									
32									
31									
30									
29									
28									
27									
26									
25									
24									
23	9700 2700 0 BB28X24X6X7 NS	200 100 -300 W14x233 NS	4500 1400 0 BW28X18X6X4 NS	700 200 0 W14x193 NS	1100 400 0 W14x257 NS	7400 1800 0 BB24X28X6X7 NS	1800 500 0 BW28X24X6X7 NS	600 200 0 W14x730 NS	

FLOOR \ COLUMN MARK	AS/17 A.5/17.1	B/17.1	C/17.1	D/17.1	E/17.1	F/17.1
37	5100 1600 0 BW24.625X18X6X4 NS	7700 2300 0 BW28X24X6X6 NS	5800 1700 0 BW28X20X6X4 NS	5300 1500 0 BW28X18X6X4 NS	2700 700 0 W14x550 NS	400 200 0 W14x109 NS
36	5200 1600 0 BW24.625X18X6X4 NS 641'-0 1/2"	7800 2300 0 BW28X24X6X6 NS 641'-0 1/2"	5900 1700 0 BW28X20X6X4 NS 641'-0 1/2"	5500 1500 0 BW28X18X6X4 NS 641'-0 1/2"	2800 800 0 W14x550 NS 641'-0 1/2"	500 200 0 W14x109 NS 668'-0 1/2"
35	5300 1600 0 W14x730+1"PL NS	8000 2300 0 BW28X24X6X6 NS	6000 1700 0 BW28X20X6X4 NS	5600 1600 0 BW28X18X6X4 NS	2900 800 0 W14x550 NS	600 200 0 W14x109 NS
34	5400 1600 0 W14x730+1"PL NS 614'-0 1/2"	8100 2300 0 BW28X24X6X6 NS 614'-0 1/2"	6100 1700 0 BW28X20X6X4 NS 614'-0 1/2"	5700 1600 0 BW28X18X6X4 NS 614'-0 1/2"	3000 800 0 W14x550 NS 614'-0 1/2"	600 300 0 W14x109 NS 641'-0 1/2"
33	5500 1600 0 W14x730+1"PL NS	8200 2300 0 BW28X24X6X6 NS	6200 1700 0 BW28X20X6X4 NS	5800 1600 0 BW28X18X6X4 NS	3100 800 0 W14x550 NS	700 300 0 W14x176 NS
32	5500 1600 0 W14x730+1"PL NS 587'-0 1/2"	8400 2400 0 BW28X24X6X6 NS 587'-0 1/2"	6400 1800 0 BW28X20X6X4 NS 587'-0 1/2"	5900 1600 0 BW28X18X6X4 NS 587'-0 1/2"	3200 800 0 W14x550 NS 587'-0 1/2"	800 300 0 W14x176 NS 614'-0 1/2"
31	5600 1600 0 BW24.625X18X6X4 NS	8500 2400 0 BB28X24X6X4 NS	6500 1800 0 BW28X20X6X4 NS	6000 1600 0 BW28X20X6X4 NS	3300 800 0 W14x550 NS	900 300 0 W14x176 NS
30	5700 1600 0 BW24.625X18X6X4 NS 560'-0 1/2"	8600 2400 0 BB28X24X6X4 NS 560'-0 1/2"	6600 1800 0 BW28X20X6X4 NS 560'-0 1/2"	6100 1600 0 BW28X20X6X4 NS 560'-0 1/2"	3400 800 0 W14x550 NS 560'-0 1/2"	900 300 0 W14x176 NS 587'-0 1/2"
29	5800 1700 0 BW24.625X20X6X4 NS 546'-0 1/2"	8800 2400 0 BB28X24X6X4 NS	6700 1800 0 BW28X20X6X4 NS	6200 1600 0 BW28X20X6X4 NS	3500 900 0 W14x550 NS	1000 300 0 W14x176 NS
28	5900 1700 0 BW24.625X20X6X4 NS 533'-0 1/2"	8900 2400 0 BB28X24X6X4 NS 533'-0 1/2"	6800 1800 0 BW28X20X6X4 NS 533'-0 1/2"	6400 1700 0 BW28X20X6X4 NS 533'-0 1/2"	3600 900 0 W14x550 NS 533'-0 1/2"	1100 300 0 W14x176 NS 560'-0 1/2"
27	6000 1700 0 BW24.625X20X6X4 NS	9000 2400 0 BB28X24X6X4 NS	6900 1800 0 BW28X22X6X4 NS	6500 1700 0 BW28X20X6X4 NS	3700 900 0 W14x605 NS	1200 300 0 W14x193 NS
26	6100 1700 0 BW24.625X20X6X4 NS 506'-0 1/2"	9200 2500 0 BB28X24X6X4 NS 506'-0 1/2"	7100 1800 0 BW28X22X6X4 NS 506'-0 1/2"	6600 1700 0 BW28X20X6X4 NS 506'-0 1/2"	3800 900 0 W14x605 NS 506'-0 1/2"	1200 400 0 W14x193 NS 533'-0 1/2"
25	6200 1700 0 BW24.625X22X6X4 NS 487'-6 1/2"	9300 2600 0 BB28X24X6X6 NS	7200 2000 0 BW28X24X6X5 NS	6700 1700 0 BW28X22X6X4 NS 487'-6 1/2"	3900 900 0 W14x730 NS	1300 400 0 W14x233 NS 514'-6 1/2"
24	6300 1700 0 BW24.625X22X6X4 NS 474'-4 1/2"	9400 2600 0 BB28X24X6X6 NS 474'-4 1/2"	7300 2000 0 BW28X24X6X5 NS 474'-4 1/2"	6800 1700 0 BW28X22X6X4 NS 469'-4 1/2"	4100 900 0 W14x730 NS 474'-4 1/2"	1400 400 0 W14x233 NS 506'-0 1/2"
23	6500 1800 0 BW24.625X28X6X6 NS		7400 2000 0 BW28X24X6X5 NS		4100 1000 0 W14x730+1"PL NS	

FLOOR \ COLUMN MARK	BS/17 BS/17.1	P/1	P/2	P/3	P/4
37	5700 1500 -500 BW28X22X6X4 NS				
36	5800 1500 -500 BW28X22X6X4 NS 641'-0 1/2"				
35	5900 1500 -400 BW28X22X6X4 NS				
34	6000 1600 -300 BW28X22X6X4 NS 614'-0 1/2"				
33	6100 1600 -300 BW28X22X6X4 NS				
32	6200 1600 -200 BW28X22X6X4 NS 587'-0 1/2"				
31	6300 1600 -100 BW28X24X6X4 NS				
30	6500 1600 -100 BW28X24X6X4 NS 560'-0 1/2"				
29	6600 1600 0 BW28X24X6X4 NS				
28	6800 1700 0 BW28X24X6X4 NS 533'-0 1/2"				
27	7100 1700 0 BB28X24X6X5 NS 514'-6 1/2"				
26	7300 1700 0 BB28X24X6X5 NS 501'-0 1/2"				
25	7400 1800 0 BB24X28X6X7 NS 487'-6 1/2"				
24					
23				300 100 0 TP25.5X27.25X6X1	

HUDSON YARDS - RETAIL PODIUM AND TOWER A

500 WEST 33RD STREET
New York, NY

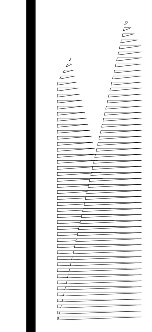

Client
Related Companies
60 Columbus Circle
New York, NY 10023
TEL: 212.801.1000 FAX: 212.801.1048

Oxford Properties Group
320 Park Avenue, 17th Floor
New York, NY 10022
TEL: 212.986.7514 FAX: 212.986.7510

Architect
Kohn Pedersen Fox Associates
11 West 42nd Street
New York, New York 10036
TEL: 212.977.6500 FAX: 212.956.2526

Structural Engineer
Thornton Tomasetti, Inc.
51 Madison Avenue
New York, New York 10010
TEL: 917.661.7800 FAX: 718.661.7801

Mechanical, Electrical, Plumbing, Fire Protection
Jaros Baum & Bolles Consulting Engineers
80 Pine Street
New York, NY 10013
TEL: 212.530.9300 FAX: 212.269.5894

Retail Interior Design & Planning
Elkus-Manfredi
300 A Street
Boston, MA 02210
TEL: 617.426.1300

No.	Description	Date
2	D.O.B. AMENDMENT #2	10/15/2016
1	D.O.B. BUILDING PERMIT FILING	12/10/2014

Key Plan

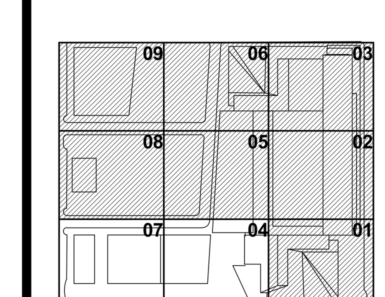

STATE OF NEW YORK · MICHAEL J. SQUARZINI · LICENSED PROFESSIONAL ENGINEER · No. 080840

Issue Date: 12/10/2014
Project No. N11328.00
Drawn By Author
Sheet Number

HYE -TA -S5-2006

Drawing Title

COLUMN SCHEDULE III FLOORS 23-37

Damian Titus
NYC Buildings
APPROVED
Under Directive 2 of 1975
AMENDED APPLICATION
Date: 05/03/2017
NYC Development Hub

0 4' 8' 16'
N

Drawing Number
S5-2006
B-Scan Drawing Number
S-723.01

SHEET 359 OF 443

© 2013 KOHN PEDERSEN FOX ASSOCIATES PC. All rights reserved.

S5-2006
10/17/2016 4:01:21 PM
COLUMN SCHEDULE III FLOORS 23-37
P:\NY1\Projects\N11328.00\Drawings\Structural\Record\Issued\2016-10-16 - D.O.B. Amendment No.2\Revit - Rev. Removed\HYTA TYP detail_Col.Schedule.rvt

DEPT OF BLDGS 121186251 Job Number
ES743274092 Scan Code

FLOOR \ COLUMN MARK	B/13.2 B/13.1	C/13.2 C/13.1	D/13.2 D/13.1	[illegible]/13.2 [illegible]/13.1	F/13.2 F/13.1	G/13.2 G/13.1	DS/13.2 DS/13.1	H/13.2	J/13.2	K/13.2	L/13.2	A.6/13.3	FS/13.3	HS/13.3	A/2S AB/2S	CS/2S
51	1700 600 -100 W14x426 NS	1500 500 0 W14x455 NS	1400 500 0 W14x500 NS	1200 400 0 W14x500 NS			1500 500 -1100 W14x730 NS					2300 700 -300 W14x500 NS	800 300 -400 W14x730 EW		3600 1400 0 W14x730 EW	
50	1800 600 0 W14x426 NS 848'-0 1/2"	1600 500 0 W14x455 NS 848'-0 1/2"	1500 500 0 W14x500 NS 848'-0 1/2"	1300 400 0 W14x500 NS 848'-0 1/2"			1600 500 -1100 W14x730 NS 848'-0 1/2"					2400 800 -200 W14x500 NS 848'-0 1/2"	900 300 -400 W14x730 EW 848'-0 1/2"		3700 1400 0 W14x730 EW 848'-0 1/2"	
49	1900 600 0 W14x455 NS	1700 500 0 W14x500 NS	1500 500 0 W14x500 NS	1400 400 0 W14x550 NS			1700 600 -1000 W14x730 NS					2500 800 -200 W14x500 NS	900 300 -400 W14x730 EW		3800 1400 0 W14x730 EW	
48	2000 600 0 W14x455 NS 821'-0 1/2"	1800 500 0 W14x500 NS 821'-0 1/2"	1600 500 0 W14x500 NS 821'-0 1/2"	1500 500 0 W14x550 NS 821'-0 1/2"			1800 600 -1000 W14x730 NS 821'-0 1/2"					2600 800 -100 W14x500 NS 821'-0 1/2"	1000 300 -300 W14x730 EW 821'-0 1/2"		3900 1400 0 W14x730 EW 821'-0 1/2"	
47	2100 600 0 W14x500 NS	1900 600 0 W14x500 NS	1700 500 0 W14x500 NS	1600 500 0 W14x550 NS			1900 600 -900 W14x730 NS					2600 800 -100 W14x550 NS	1000 300 -300 W14x730 EW		4000 1400 0 W14x730 EW	
46	2200 600 0 W14x500 NS 794'-0 1/2"	2000 600 0 W14x500 NS 794'-0 1/2"	1800 500 0 W14x500 NS 794'-0 1/2"	1700 500 0 W14x550 NS 794'-0 1/2"			1900 600 -900 W14x730 NS 794'-0 1/2"					2700 800 0 W14x550 NS 794'-0 1/2"	1100 300 -300 W14x730 EW 794'-0 1/2"		4100 1400 0 W14x730 EW 794'-0 1/2"	
45	2200 700 0 W14x500 NS	2100 600 0 W14x500 NS	1900 600 0 W14x550 NS	1800 500 0 W14x550 NS	100 100 0 W14x426 NS		2000 600 -800 W14x730 NS					2800 800 0 W14x550 NS	1100 300 -200 W14x730 EW		4200 1500 0 W14x730 EW	
44	2300 700 0 W14x500 NS 767'-0 1/2"	2200 600 0 W14x500 NS 767'-0 1/2"	2000 600 0 W14x550 NS 767'-0 1/2"	1900 500 0 W14x550 NS 767'-0 1/2"	200 100 0 W14x426 NS 767'-0 1/2"		2100 600 -800 W14x730 NS 767'-0 1/2"					2900 800 0 W14x550 NS 767'-0 1/2"	1200 300 -200 W14x730 EW 767'-0 1/2"		4300 1500 0 W14x730 EW 767'-0 1/2"	
43	2400 700 0 W14x500 NS	2300 600 0 W14x550 NS	2100 600 0 W14x550 NS	1900 500 0 W14x605 NS	300 100 0 W14x426 NS		2200 600 -700 W14x730+1"PL NS					3000 800 0 W14x550 NS	1300 400 -200 W14x730+1"PL EW		4400 1500 0 W14x730 EW	
42	2500 700 0 W14x500 NS 740'-0 1/2"	2400 600 0 W14x550 NS 740'-0 1/2"	2200 600 0 W14x550 NS 740'-0 1/2"	2000 500 0 W14x605 NS 740'-0 1/2"	400 100 0 W14x426 NS 740'-0 1/2"		2200 600 -700 W14x730+1"PL NS 740'-0 1/2"					3000 800 0 W14x550 NS 740'-0 1/2"	1300 400 -100 W14x730+1"PL EW 740'-0 1/2"		4500 1500 0 W14x730 EW 740'-0 1/2"	
41	2600 700 0 W14x605 NS	2400 600 0 W14x605 NS	2300 600 0 W14x605 NS	2100 600 0 W14x605 NS	500 100 0 W14x550 NS		2300 700 -600 BW24.625X18X6X4 NS					3100 800 0 W14x730+1"PL NS	1400 400 -100 BW24.625X18X6X4 EW		4600 1500 0 BW24.625X20X6X4 EW	
40	2700 700 0 W14x605 NS 712'-7"	2500 700 0 W14x605 NS 712'-7"	2400 600 0 W14x605 NS 712'-7"	2200 600 0 W14x605 NS 712'-7"	500 100 0 W14x550 NS 712'-7"		2400 700 -600 BW24.625X18X6X4 NS 712'-7"					3200 900 0 W14x730+1"PL NS 712'-7"	1400 400 0 BW24.625X18X6X4 EW 712'-7"		4700 1500 0 BW24.625X20X6X4 EW 712'-7"	
39U	3000 700 0 W14x730+1"PL NS	2600 600 0 BW28X18X6X4 NS	2500 600 0 W14x730+1"PL NS	2500 600 -400 W14x730+1"PL NS	900 200 -600 W14x398 NS		2500 500 -2300 BW24.625X20X6X4 NS					3300 800 0 BW24.625X18X6X4 NS 5/8" FILLET	1600 300 -700 W14x665 EW 698'-0 1/2"		4800 1300 0 BW24.625X22X6X4 EW 5/8" FILLET	
39	3000 700 0 W14x730+1"PL NS 682'-7"	2700 600 0 BW28X18X6X4 NS 682'-7"	2600 600 0 W14x730+1"PL NS 682'-7"	2600 600 -400 W14x730+1"PL NS 682'-7"	900 200 -600 W14x398 NS 682'-7"		2600 500 -2300 BW24.625X20X6X4 NS 682'-7"					3300 800 0 BW24.625X18X6X4 NS 5/8" FILLET 682'-7"	1600 300 -700 W14x665 EW		4900 1300 0 BW24.625X22X6X4 EW 5/8" FILLET 682'-7"	
38	4500 1100 -1000 BW28X20X6X4 NS 668'-0 1/2"	3700 900 -700 BW28X20X6X4 NS 668'-0 1/2"	3500 900 -600 W14x730+1"PL NS 668'-0 1/2"	3300 800 -700 W14x730+1"PL NS 668'-0 1/2"	1500 300 -400 W14x370 NS 668'-0 1/2"		2800 600 -2200 W14x730+1"PL NS 668'-0 1/2"					4700 1300 -800 BW24.625X22X6X4 NS 668'-0 1/2"	1700 400 -700 W14x500 EW 668'-0 1/2"		5700 1600 -700 BW24.625X24X6X4 EW 668'-0 1/2"	

FLOOR \ COLUMN MARK	FS/13.9	HS/13.9	B/14	C/14	C.1/14	D/14	D.1/14	E/14	E.1/14	F/14	A.9S/14	F.6/14	F.9/14	G/14	H/14	J/14	K/14	A.4/1S	A.9/1S	B.9/1S	C.95/1S	BS/1S	B/14.3	C.1/14.3	D.1/14.3	A.9S/14.5
51	1400 700 -800 BW24.625X18X6X4 EW		7700 2600 0 BW24.625X28X6X5 EW		5700 2400 BW24.625X22X6X4EW		5100 2000 0 BW24.625X22X6X4 EW		6000 2100 -1700 BW24.625X24X6X4 EW		300 100 0 W12X96 EW															200 100 0 W12x96 EW
50	1500 700 -700 BW24.625X18X6X4 EW 848'-0 1/2"		8100 2700 0 BW24.625X28X6X5 EW 851'-0 1/2"		5800 2400 0 BW24.625X22X6X4 EW 851'-0 1/2"		5500 2000 0 BW24.625X22X6X4 EW 851'-0 1/2"		6300 2100 -1600 BW24.625X24X6X4 EW 851'-0 1/2"		400 100 0 W12X96 EW 848'-0 1/2"															300 100 0 W12x96 EW 848'-0 1/2"
49	1600 700 -600 BW24.625X18X6X4 EW		8600 2800 0 BB24X28X6X7 EW		5900 2500 0 BW24.625X24X6X4 EW		5700 2100 0 BW24.625X22X6X4 EW		6500 2200 -1400 BW24.625X24X6X4 EW		500 100 0 W12X136 EW															400 200 0 W12X152 EW
48	1700 700 -600 BW24.625X18X6X4 EW 821'-0 1/2"		9100 3000 0 BB24X28X6X7 EW 824'-0 1/2"		6100 2500 0 BW24.625X24X6X4 EW 824'-0 1/2"		5900 2100 0 BW24.625X22X6X4 EW 824'-0 1/2"		6700 2200 -1300 BW24.625X24X6X4 EW 824'-0 1/2"		600 200 0 W12X136 EW 821'-0 1/2"															500 200 0 W12X152 EW 821'-0 1/2"
47	1800 700 -500 BW24.625X18X6X4 EW		9700 3100 0 BB24X28X6X11 EW		6300 2600 0 BW24.625X26X6X4 EW		6100 2100 0 BW24.625X24X6X4 EW		7000 2300 -1200 BW24.625X28X6X4 EW		700 200 0 W12x190 EW															600 200 0 W12X190 EW
46	1900 800 -500 BW24.625X18X6X4 EW 794'-0 1/2"		10200 3200 0 BB24X28X6X11 EW 797'-0 1/2"		6400 2600 0 BW24.625X26X6X4 EW 797'-0 1/2"		6200 2200 0 BW24.625X24X6X4 EW 797'-0 1/2"		7200 2300 -1100 BW24.625X28X6X4 EW 797'-0 1/2"		800 200 0 W12x190 EW 794'-0 1/2"															700 200 0 W12X190 EW 794'-0 1/2"
45	2000 800 -400 BW24.625X18X6X4 EW		10800 3400 0 BS28X26 NS		6700 2600 0 BW24.625X28X6X5 EW		6300 2200 0 BW24.625X26X6X4 EW		7400 2300 -900 BW24.625X28X6X7 EW		900 200 0 W12x190 EW															800 300 0 W12X190 EW
44	2100 800 -300 BW24.625X18X6X4 EW 767'-0 1/2"		11400 3500 0 BS28X26 NS 770'-0 1/2"		6900 2700 0 BW24.625X28X6X5 EW 770'-0 1/2"		6500 2300 0 BW24.625X26X6X4 EW 770'-0 1/2"		7500 2400 -800 BW24.625X28X6X7 EW 770'-0 1/2"		1000 300 0 W12x190 EW 767'-0 1/2"															900 300 0 W12X190 EW 767'-0 1/2"
43	2200 800 -300 BW24.625X18X6X4 EW		11900 3600 0 BS30X28 NS		7200 2700 0 BW24.625X28X6X9 EW		6600 2300 0 BW24.625X28X6X6 EW		7700 2400 -700 BB24X28X6X7 EW		1200 300 0 W12x210 EW															1000 300 0 W12X210 EW
42	2300 800 -200 BW24.625X18X6X4 EW 740'-0 1/2"		12500 3800 0 BS30X28 NS 743'-0 1/2"		7400 2800 0 BW24.625X28X6X9 EW 742'-7"		6800 2300 0 BW24.625X28X6X6 EW 742'-7"		7900 2400 -600 BB24X28X6X7 EW 742'-7"		1300 300 0 W12x210 EW 740'-0 1/2"															1100 300 0 W12X210 EW 740'-0 1/2"
41	2400 800 -200 BW24.625X20X6X4 EW		13100 3900 0 BS30X34 NS		7700 2800 0 BS28X24 NS		7000 2400 0 BW24.625X28X6X11 EW		8100 2500 -500 BS28X28 NS		1400 300 0 W12x279 EW															1200 300 0 W14x550 EW
40	2500 900 -100 BW24.625X20X6X4 EW 712'-7"		13800 4000 -4200 BS30X34 NS 715'-7"		7900 2900 0 BS28X24 NS 3/4" PJP 715'-7"		7200 2400 -900 BW24.625X28X6X11 EW 715'-7"		8300 2500 -1900 BS28X28 NS 3/4" PJP 715'-7"		1600 400 0 W12x279 EW 712'-7"															1300 400 0 W14x550 EW 712'-7"
39U	2800 700 0 BW24.625X18X6X4 EW 5/8" FILLET		11600 3100 0 BS28X26 NS 703'-4 3/8"		8000 2800 0 BS28X24 NS		7100 2300 0 BW24.625X28X6X11 EW		7600 2000 0 BS28X28 NS 3/4" PJP			2100 400 -1600 BW24.625X18X6X4 EW 5/8" FILLET														
39	2800 700 0 BW24.625X18X6X4 EW 5/8" FILLET 682'-7"		11700 3100 0 BS28X26 NS 685'-7"		8000 2800 0 BS28X24 NS 685'-7"		7200 2300 0 BW24.625X28X6X11 EW 685'-7"		7600 2100 0 BS28X28 NS 3/4" PJP 682'-7"			2100 500 -1600 BW24.625X18X6X4 EW 5/8" FILLET 685'-7"														
38	3000 800 -700 W14x730+1"PL EW 668'-0 1/2"		12700 3400 0 BS28X26 NS 671'-0 1/2"		9900 3000 0 BB24X28X6X11 EW 671'-0 1/2"		7500 2500 0 BW24.625X28X6X4 EW 671'-0 1/2"		8600 2300 0 BB24X28X6X10 EW 668'-0 1/2"			4200 1100 -700 BW24.625X20X6X4 EW 671'-0 1/2"														

TYPICAL COLUMN SCHEDULE NOTES:
1. FOR TYPICAL COLUMN SCHEDULE NOTES SEE S5-1001.

TYPICAL COLUMN SCHEDULE NOTES:
1. FOR TYPICAL COLUMN SCHEDULE NOTES SEE S5-1001.

HUDSON YARDS - RETAIL PODIUM AND TOWER A

500 WEST 33RD STREET
New York, NY

Client
Related Companies
60 Columbus Circle
New York, NY 10023
TEL: 212.801.1000 FAX: 212.801.1048

Oxford Properties Group
320 Park Avenue, 17th Floor
New York, NY 10022
TEL: 212.986.7514 FAX: 212.986.7510

Architect
Kohn Pedersen Fox Associates
11 West 42nd Street
New York, New York 10036
TEL: 212.977.6500 FAX: 212.956.2526

Structural Engineer
Thornton Tomasetti, Inc.
51 Madison Avenue
New York, New York 10010
TEL: 917.661.7800 FAX: 718.661.7801

Mechanical, Electrical, Plumbing, Fire Protection
Jaros Baum & Bolles Consulting Engineers
80 Pine Street
New York, NY 10013
TEL: 212.530.9300 FAX: 212.269.5894

Retail Interior Design & Planning
Elkus-Manfredi
300 A Street
Boston, MA 02210
TEL: 617.426.1300

No.	Description	Date
2	D.O.B. AMENDMENT #2	10/15/2016
1	D.O.B. BUILDING PERMIT FILING	12/10/2014

Key Plan

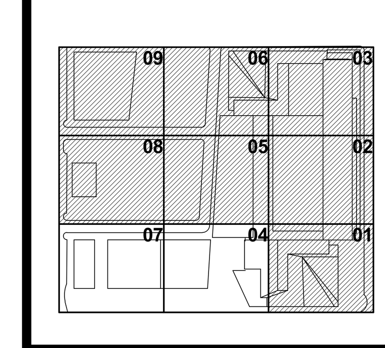

Issue Date: 12/10/2014
Project No. N11328.00
Drawn By Author
Sheet Number

HYE -TA -S5-2007

Drawing Title

COLUMN SCHEDULE I FLOORS 38-51

Damian Titus
APPROVED
Under Directive 2 of 1975
AMENDED APPLICATION
Date: 05/03/2017
NYC Development Hub

0 4' 8' 16'

N

Drawing Number
S5-2007
B-Scan Drawing Number
S-724.01

© 2013 KOHN PEDERSEN FOX ASSOCIATES PC. All rights reserved.

S5-2007
10/17/2016 4:01:24 PM
COLUMN SCHEDULE I FLOORS 38-51
P:\NY1\Projects\N11328.00\Drawings\Structural\Record\Issued\2016-10-16 - D.O.B. Amendment No.2\Revit - Rev. Removed\HYTA TYP detail_Col.Schedule.rvt

© Copyright Thornton Tomasetti 2010

COLUMN MARK / FLOOR	F.9/14.5	FS/14.6	HS/14.6	A/14.7 AB/14.7	B.0/14.7	C.1/14.7	C.06/14.7	D.1/14.7	CS/14.75	B/15	C.1/15	C.9/15	C.06/15.0	D.1/15	D.8/15	E.1/15	E.8/15	A.9S/15	F.6/15	F.9/15	H/15	J/15	K/15	F.9/15.1	FS/15.1	HS/15.1	A/15.2 AB/15.2	CS/15.3	A.9S/15.4	HS/15.7	FS/15.9	A/15.95 AB/15.95	B/16	C.1/16	C.9/16	C.95/16.0	D.1/16	D.8/16	D.9/16	E.1/16	E.7/16	E.8/16	COLUMN MARK / FLOOR
51		1200 600 -200 W14x730+1"PL EW		2100 800 0 W14x398 EW						7100 3300 E● BW24.625X26X6X4 E● 851'-0 1/2"	6700 3800 E● BW24.625X26X6X4 E● 851'-0 1/2"			8300 3600 E● BW24.625X28X6X5 E● 851'-0 1/2"		5100 1800 E● BW24.625X18X6X4 E● 851'-0 1/2"		200 100 0 W12X120 EW 848'-0 1/2"						1200 600 -200 W14x730+1"PL EW 848'-0 1/2"		3700 1300 0 W14x665 EW 848'-0 1/2"		0 0 -100 W12X106 EW 848'-0 1/2"		2000 900 -300 BW24.625X18X6X4 E● 848'-0 1/2"	4600 1900 0 W14x730+1"PL EW ⊂ 848'-0 1/2"	7600 3300 E● BW24.625X26X6X4 E● 851'-0 1/2"	5500 2400 E● BW24.625X22X6X4 E● 851'-0 1/2"			4600 2100 E● BW24.625X22X6X4 E● 851'-0 1/2"			4600 1700 -1300 BW24.625X22X6X4 E● 851'-0 1/2"			51
50		1300 600 -200 W14x730+1"PL EW 848'-0 1/2"		2200 800 0 W14x398 EW 848'-0 1/2"						7300 3400 E● BW24.625X26X6X4 E● 851'-0 1/2"	6900 3900 E● BW24.625X26X6X4 E● 851'-0 1/2"			8500 3600 E● BW24.625X28X6X5 E● 851'-0 1/2"		5400 1800 E● BW24.625X18X6X4 E● 851'-0 1/2"		300 100 0 W12X120 EW 848'-0 1/2"						1300 600 -200 W14x730+1"PL EW 848'-0 1/2"		3800 1400 0 W14x665 EW 848'-0 1/2"		100 100 0 W12X106 EW 848'-0 1/2"		2200 900 -300 BW24.625X18X6X4 E● 848'-0 1/2"	4700 1900 0 W14x730+1"PL EW ⊂ 848'-0 1/2"	8000 3400 E● BW24.625X22X6X4 E● 851'-0 1/2"	5700 2400 E● BW24.625X22X6X4 E● 851'-0 1/2"			4700 2100 E● BW24.625X22X6X4 E● 851'-0 1/2"			4800 1800 -1500 BW24.625X22X6X4 E● 851'-0 1/2"			50
49		1400 700 -100 W14x730+1"PL EW		2300 800 0 W14x426 EW						7500 3400 E● BW24.625X28X6X4 E● 824'-0 1/2"	7100 3900 E● BW24.625X28X6X4 E● 824'-0 1/2"			8700 3600 E● BW24.625X28X6X9 E● 824'-0 1/2"		5600 1800 E● BW24.625X20X6X4 E● 824'-0 1/2"		400 200 0 W12X152 EW 821'-0 1/2"						1400 700 -100 W14x730+1"PL EW 821'-0 1/2"		3900 1400 0 W14x665 EW 821'-0 1/2"		100 0 0 W12X120 EW 821'-0 1/2"		2300 900 -300 BW24.625X18X6X4 E● 821'-0 1/2"	4800 1900 0 W14x730+1"PL EW ⊂ 821'-0 1/2"	8500 3400 E● BW24.625X26X6X11 E● 824'-0 1/2"	5900 2400 E● BW24.625X24X6X4 E● 824'-0 1/2"			4900 2200 E● BW24.625X22X6X4 E● 824'-0 1/2"			5000 1800 -1500 BW24.625X22X6X4 E● 824'-0 1/2"			49
48		1500 700 -100 W14x730+1"PL EW 821'-0 1/2"		2400 800 0 W14x426 EW 821'-0 1/2"						7700 3400 E● BW24.625X28X6X4 E● 824'-0 1/2"	7300 4000 E● BW24.625X28X6X4 E● 824'-0 1/2"			8800 3700 E● BW24.625X28X6X9 E● 824'-0 1/2"		5800 1900 E● BW24.625X20X6X4 E● 824'-0 1/2"		500 200 0 W12X152 EW 821'-0 1/2"						1500 700 -100 W14x730+1"PL EW 821'-0 1/2"		4000 1400 0 W14x665 EW 821'-0 1/2"		200 100 0 W12X120 EW 821'-0 1/2"		2400 1000 -300 BW24.625X18X6X4 E● 821'-0 1/2"	4900 1900 0 W14x730+1"PL EW ⊂ 821'-0 1/2"	9000 3400 E● BW24.625X26X6X11 E● 824'-0 1/2"	6100 2500 E● BW24.625X24X6X4 E● 824'-0 1/2"			5000 2200 E● BW24.625X22X6X4 E● 824'-0 1/2"			5200 1900 -1300 BW24.625X22X6X4 E● 824'-0 1/2"			48
47		1600 700 0 W14x730+1"PL EW ⊂		2500 800 0 W14x455 EW						8000 3500 E● BW24.625X28X6X5 E● 797'-0 1/2"	7400 4000 E● BW24.625X28X6X5 E● 797'-0 1/2"			9000 3700 E● BW24.625X28X6X9 E● 797'-0 1/2"		6000 1900 E● BW24.625X20X6X4 E● 797'-0 1/2"		600 200 0 W12X210 EW 794'-0 1/2"						1600 700 0 W14X311 EW 794'-0 1/2"		4100 1400 0 W14x665 EW 794'-0 1/2"		300 100 0 W12X152 EW 794'-0 1/2"		2600 1000 -300 BW24.625X20X6X4 E● 794'-0 1/2"	5000 1900 0 W14x730+1"PL EW ⊂ 794'-0 1/2"	9500 3500 E● BB24X28X6X10 E●W ⊂ 797'-0 1/2"	6300 2500 E● BW24.625X26X6X4 E● 797'-0 1/2"			5200 2200 E● BW24.625X24X6X4 E● 797'-0 1/2"			5500 1900 -1300 BW24.625X24X6X4 E● 797'-0 1/2"			47
46		1700 700 0 W14x730+1"PL EW ⊂		2500 800 0 W14x455 EW 794'-0 1/2"						8200 3500 E● BW24.625X28X6X5 E● 797'-0 1/2"	7600 4100 E● BW24.625X28X6X5 E● 797'-0 1/2"			9200 3800 E● BW24.625X28X6X9 E● 797'-0 1/2"		6200 2000 E● BW24.625X20X6X4 E● 797'-0 1/2"		800 200 0 W12X210 EW 794'-0 1/2"						1700 700 0 W14X311 EW 794'-0 1/2"		4200 1400 0 W14x665 EW 794'-0 1/2"		400 100 0 W12X152 EW 794'-0 1/2"		2700 1000 -300 BW24.625X20X6X4 E● 794'-0 1/2"	5200 2000 0 W14x730+1"PL EW ⊂ 794'-0 1/2"	10000 3500 E● BB24X28X6X10 E●W ⊂ 797'-0 1/2"	6500 2500 E● BW24.625X26X6X4 E● 797'-0 1/2"			5300 2300 E● BW24.625X24X6X4 E● 797'-0 1/2"			5700 2000 -1500 BW24.625X24X6X4 E● 797'-0 1/2"			46
45		1800 700 0 W14x730+1"PL EW ⊂		2600 800 0 W14x455 EW						8400 3600 E● BW24.625X28X6X6 E● 770'-0 1/2"	7800 4200 E● BW24.625X28X6X5 E● 770'-0 1/2"			9400 3800 E● BW24.625X28X6X9 E● 770'-0 1/2"		6400 2000 E● BW24.625X22X6X4 E● 770'-0 1/2"		900 200 0 W12X210 EW 767'-0 1/2"						1800 700 0 W14x730 EW 767'-0 1/2"		4300 1400 0 W14x730 EW 767'-0 1/2"		500 100 0 W12X170 EW 767'-0 1/2"		2800 1000 -300 BW24.625X18X6X4 E● 767'-0 1/2"	5300 2000 0 BS28X24 NS 770'-0 1/2"	10500 3600 0 BS28X24 NS 770'-0 1/2"	6600 2600 E● BW24.625X26X6X4 E● 770'-0 1/2"			5500 2300 E● BW24.625X26X6X4 E● 770'-0 1/2"			5900 2000 -1500 BW24.625X26X6X4 E● 770'-0 1/2"			45
44		1900 700 0 W14x730+1"PL EW ⊂		2700 900 0 W14x455 EW 767'-0 1/2"						8700 3600 E● BW24.625X28X6X6 E● 770'-0 1/2"	8000 4200 E● BW24.625X28X6X5 E● 770'-0 1/2"			9500 3900 E● BW24.625X28X6X9 E● 770'-0 1/2"		6500 2100 E● BW24.625X22X6X4 E● 770'-0 1/2"		1000 300 0 W12X210 EW 767'-0 1/2"						1900 700 0 W14x730 EW 767'-0 1/2"		4400 1500 0 W14x730 EW 767'-0 1/2"		700 200 0 W12X170 EW 767'-0 1/2"		2900 1000 -400 BW24.625X18X6X4 E● 767'-0 1/2"	5400 2000 0 BW24.625X18X6X4 E● 770'-0 1/2"	11100 3700 0 BS28X24 NS 770'-0 1/2"	6800 2600 E● BW24.625X26X6X4 E● 770'-0 1/2"			5600 2300 E● BW24.625X26X6X4 E● 770'-0 1/2"			6100 2100 -900 BW24.625X26X6X4 E● 770'-0 1/2"			44
43		2000 700 0 BW24.625X18X6X4 E●W		2800 900 0 W14x500 EW						8900 3700 E●W ⊂ BB24X28X6X7 E●W ⊂ 743'-0 1/2"	8200 4300 E● BW24.625X28X6X6 E● 743'-0 1/2"			9700 4000 E● BW24.625X28X6X9 E● 743'-0 1/2"		6700 2100 E● BW24.625X22X6X4 E● 743'-0 1/2"		1100 300 0 W12X230 EW 740'-0 1/2"						2000 800 0 BW24.625X18X6X4 E●W 740'-0 1/2"		4500 1500 0 W14x730 EW 740'-0 1/2"		800 200 0 W12X190 EW 740'-0 1/2"		3100 1100 -300 BW24.625X20X6X4 E●W 740'-0 1/2"	5600 2000 0 BW24.625X18X6X4 E●W 743'-0 1/2"	11700 3900 0 BS28X28 NS 743'-0 1/2"	7000 2700 E● BW24.625X26X6X4 E●W 743'-0 1/2"			5800 2400 E● BW24.625X26X6X4 E●W 743'-0 1/2"			6300 2100 -1500 BW24.625X26X6X9 E●W 743'-0 1/2"			43
42		2000 800 0 BW24.625X18X6X4 E●W		2900 900 0 W14x500 EW 740'-0 1/2"						9300 3700 E●W ⊂ BB24X28X6X7 E●W ⊂ 743'-0 1/2"	8400 4300 E● BW24.625X28X6X6 E● 743'-0 1/2"			9900 4000 E● BW24.625X28X6X9 E● 743'-0 1/2"		6900 2100 E● BW24.625X22X6X4 E● 743'-0 1/2"		1300 300 0 W12X230 EW 740'-0 1/2"						2100 800 0 BW24.625X18X6X4 E●W 740'-0 1/2"		4600 1500 0 W14x730 EW 740'-0 1/2"		900 200 0 W12X190 EW 740'-0 1/2"		3200 1100 -300 BW24.625X20X6X4 E●W 740'-0 1/2"	5700 2000 0 BW24.625X18X6X4 E●W 740'-0 1/2"	12400 4000 0 BS28X28 NS 743'-0 1/2"	7200 2700 E● BW24.625X26X6X4 E●W 743'-0 1/2"			5900 2400 E● BW24.625X26X6X4 E●W 743'-0 1/2"			6500 2200 -1500 BW24.625X26X6X9 E●W 743'-0 1/2"			42
41		2100 800 0 BW24.625X18X6X4 E●W		3000 900 0 W14x730 EW						9600 3800 0 BS28X28 NS	8500 4400 E● BB24X28X6X11 E●W ⊂ 715'-7"			10000 4000 0 BS30X28 NS 715'-7"		7000 2200 E● BW24.625X20X6X8 E●W 715'-7"		1400 300 0 W12X279 EW 712'-7"						2100 800 0 BW24.625X18X6X4 E●W 715'-7"		4700 1500 0 W14x730 EW 715'-7"		1000 200 0 W12X279 EW 712'-7"		3300 1100 -300 BW24.625X22X6X4 E●W 715'-7"	5800 2000 0 BW24.625X24X6X4 E●W 715'-7"	13000 4100 0 BS30X32 NS 715'-7"	7400 2700 0 BS28X24 NS 715'-7"			6000 2500 E● BB24X28X6X7 E●W ⊂ 715'-7"			6600 2200 -1500 BW24.625X28X6X10 E●W 715'-7"			41
40		2200 800 0 BW24.625X18X6X4 E●W		3100 900 0 W14x730 EW 712'-7"						9800 3800 0 BS28X28 NS 715'-7"	8700 4400 E● BB24X28X6X11 E●W ⊂ 715'-7"			10200 4100 0 BS30X28 NS 715'-7"		7200 2200 E● BW24.625X28X6X8 E●W 715'-7"		1500 400 0 W12X279 EW 712'-7"						2200 800 0 BW24.625X18X6X4 E●W 715'-7"		4800 1500 0 BW24.625X18X6X4 E●W 715'-7"		1200 300 0 W12X279 EW 712'-7"		3500 1100 -300 BW24.625X22X6X4 E●W 715'-7"	5900 2100 0 BW24.625X24X6X4 E●W 715'-7"	13600 4200 -800 BS30X32 NS 715'-7"	7600 2800 0 BS28X24 NS 715'-7"			6000 2500 -300 BB24X28X6X7 E●W ⊂ 715'-7"			6300 2200 -1300 BW24.625X28X6X10 E●W 715'-7"			40
39U		2500 600 0 W14x730+1"PL EW ⊂		3600 1000 0 BW24.625X18X6X4 5/8" FILLET						10000 3700 0 BS28X24 NS	8200 3600 E● BB24X28X6X9 EW ⊂			8500 3300 E● BW24.625X28X6X11 E●W		6200 2000 0 BW24.625X22X6X4 5/8" FILLET								5000 1500 0 W14x550 EW				BW24.625X22X6X4 EW 5/8" FILLET		6100 2100 0 BW24.625X26X6X4 EW 5/8" FILLET	12400 3800 0 BS30X30 NS 703'-8 3/4"	7900 2700 0 BB24X28X6X9 EW ⊂				5900 2400 0 BW24.625X26X6X4 EW 5/8" FILLET			5300 1700 -300 BW24.625X26X6X10 E●W			39U
39		2500 600 0 W14x730+1"PL EW ⊂		3600 1000 0 BW24.625X18X6X4 5/8" FILLET						10100 3700 0 BS28X24 NS	8200 3600 E● BB24X28X6X9 EW ⊂			8600 3300 E● BW24.625X28X6X11 E●W		6200 2000 0 BW24.625X22X6X4 5/8" FILLET		1500 400 -300 W14x550 EW						5100 1500 0 BW24.625X22X6X4 EW 5/8" FILLET				BW24.625X22X6X4 EW 5/8" FILLET		6200 2100 0 BW24.625X26X6X4 EW 5/8" FILLET	12600 3800 0 BS30X30 NS	8100 2700 0 BB24X28X6X9 EW ⊂				6000 2400 0 BW24.625X26X6X4 EW 5/8" FILLET			5400 1700 -300 BW24.625X26X6X10 E●W			39
38		2600 700 0 W14x605 EW		3900 1200 0 W14x730+1"PL EW						10400 4000 0 BB24X28X6X11 EW ⊂	8900 3800 E● BB24X28X6X9 EW ⊂			8900 3500 E● BW24.625X28X6X6 E●W		6700 2200 E● BW24.625X24X6X4 E●W		3000 700 0 W14x605 EW						2700 700 -300 BW24.625X18X6X4 E●W		5600 1700 0 BW24.625X20X6X4 E●W				4600 1100 -1300 BW24.625X20X6X4 E●W	8500 2500 0 BW24.625X26X6X6 E●W	13000 4000 0 BS28X28 NS	9000 2900 0 BW24.625X26X6X8 E●W			7100 2600 E● BW24.625X26X6X6 E●W			6800 1900 E● BW24.625X26X6X9 E●W			38
FLOOR / COLUMN MARK	F.9/14.5	FS/14.6	HS/14.6	A/14.7 AB/14.7	B.0/14.7	C.1/14.7	C.06/14.7	D.1/14.7	CS/14.75	B/15	C.1/15	C.9/15	C.06/15.0	D.1/15	D.8/15	E.1/15	E.8/15	A.9S/15	F.6/15	F.9/15	H/15	J/15	K/15	F.9/15.1	FS/15.1	HS/15.1	A/15.2 AB/15.2	CS/15.3	A.9S/15.4	HS/15.7	FS/15.9	A/15.95 AB/15.95	B/16	C.1/16	C.9/16	C.95/16.0	D.1/16	D.8/16	D.9/16	E.1/16	E.7/16	E.8/16	FLOOR / COLUMN MARK

TYPICAL COLUMN SCHEDULE NOTES:
1. FOR TYPICAL COLUMN SCHEDULE NOTES SEE S5-1001.

Damian Titus
APPROVED
Under Directive 2 of 1975
AMENDED APPLICATION
Date: 09/19/2017
NYC Development Hub

0 4' 8' 16'

HUDSON YARDS - RETAIL PODIUM AND TOWER A

500 WEST 33RD STREET
New York, NY

Client
Related Companies
60 Columbus Circle
New York, NY 10023
TEL: 212.801.1000 FAX: 212.801.1048

Oxford Properties Group
320 Park Avenue, 17th Floor
New York, NY 10022
TEL: 212.986.7514 FAX: 212.986.7510

Architect
Kohn Pedersen Fox Associates
11 West 42nd Street
New York, New York 10036
TEL: 212.977.6500 FAX: 212.956.2526

Structural Engineer
Thornton Tomasetti, Inc.
51 Madison Avenue
New York, New York 10010
TEL: 917.661.7800 FAX: 718.661.7801

Mechanical, Electrical, Plumbing, Fire Protection
Jaros Baum & Bolles Consulting Engineers
80 Pine Street
New York, NY 10013
TEL: 212.530.9300 FAX: 212.269.5894

Retail Interior Design & Planning
Elkus-Manfredi
300 A Street
Boston, MA 02210
TEL: 617.426.1300

No.	Description	Date
2	D.O.B. AMENDMENT #2	10/15/2016
1	D.O.B. BUILDING PERMIT FILING	12/10/2014

Key Plan

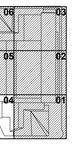

Issue Date: 12/10/2014
Project No. N11328.00
Drawn By: Author
Sheet Number

STATE OF NEW YORK — DAMIAN G. TITUS — 028966 — LICENSED PROFESSIONAL ENGINEER

HYE -TA -S5-2008

Drawing Title

COLUMN SCHEDULE II FLOORS 38-51

Drawing Number
S5-2008
B-Scan Drawing Number
S-725.01

© 2013 KOHN PEDERSEN FOX ASSOCIATES PC. All rights reserved.

S5-2008
10/17/2016 4:01:27 PM
COLUMN SCHEDULE E F FLOORS 38-51
P:\NY\Projects\N11328.00\Drawings\Structural\Revit\Issued\2016-10-16 - D.O.B. Amendment No.2\Revit - Rev. Removed\HYTA TYP detail_Col Schedule.rvt

DEPT OF BLDGS STRUCTURES Job Number
ESCHWEISS Scan Code

COLUMN MARK / FLOOR	A,9S/16	F,6/16	F,9/16	G,6/16	H,8/16	K/16	CS/16.1	ES/16.7	A,9S ABS/16.8	CS/16.8	B/17	C.1/17	C.9/17	D,8/17	E,8/17	F,9/17.0	G,6/17	H,8/17	JS/17.2	AS/17 A,S/17.1	B/17.1	C/17.1	D/17.1	E/17.1	F/17.1	BS/17 BS/17.1	P/1	P/2	P/3	P/4	COLUMN MARK / FLOOR
51	300 100 0 W12X136 EW							1200 500 -500 W14x665 NS	3000 1000 0 W14x605 EW											3200 1100 0 W14x605 NS	4500 1600 0 BW28X18X6X4 NS	3500 1300 0 W14x730 NS	2900 1100 0 W14x665 NS			3600 1400 -700 BW28X20X6X4 NS					51
50	300 100 0 W12X136 EW 848'-0 1/2"							1300 500 -500 W14x665 NS 848'-0 1/2"	3100 1000 0 W14x605 EW 848'-0 1/2"											3300 1100 0 W14x605 NS 848'-0 1/2"	4600 1700 0 BW28X18X6X4 NS 848'-0 1/2"	3600 1300 0 W14x730 NS 848'-0 1/2"	3000 1100 0 W14x665 NS 848'-0 1/2"	100 100 0 W14x370 NS 848'-0 1/2"		3800 1400 -600 BW28X20X6X4 NS 848'-0 1/2"					50
49	400 100 0 W12X190 EW							1300 600 -500 W14x665 NS	3100 1000 0 W14x605 EW											3400 1100 0 W14x605 NS	4700 1700 0 BW28X18X6X4 NS	3700 1300 0 W14x730+1*PL NS	3100 1100 0 W14x730 NS	200 100 0 W14x398 NS		3900 1400 -600 BW28X20X6X4 NS					49
48	500 200 0 W12X190 EW 821'-0 1/2"							1400 600 -400 W14x665 NS 821'-0 1/2"	3200 1000 0 W14x605 EW 821'-0 1/2"											3500 1100 0 W14x605 NS 821'-0 1/2"	4800 1700 0 BW28X18X6X4 NS 821'-0 1/2"	3800 1300 0 W14x730+1*PL NS 821'-0 1/2"	3200 1100 0 W14x730 NS 821'-0 1/2"	300 100 0 W14x398 NS 821'-0 1/2"		4000 1400 -500 BW28X20X6X4 NS 821'-0 1/2"					48
47	700 200 0 W12X252 EW							1500 600 -400 W14x665 NS	3300 1000 0 W14x665 EW											3500 1200 0 W14x605 NS	4900 1700 0 BW28X18X6X4 NS	3900 1300 0 W14x730+1*PL NS	3300 1100 0 W14x730 NS	400 100 0 W14x398 NS		4100 1500 -400 BW28X20X6X4 NS					47
46	800 200 0 W12X252 EW 794'-0 1/2"							1500 600 -300 W14x665 NS 794'-0 1/2"	3400 1000 0 W14x665 EW 794'-0 1/2"											3600 1200 0 W14x605 NS 794'-0 1/2"	5100 1700 0 BW28X18X6X4 NS 794'-0 1/2"	4000 1400 0 W14x730+1*PL NS 794'-0 1/2"	3400 1100 0 W14x730 NS 794'-0 1/2"	400 100 0 W14x398 NS 794'-0 1/2"		4200 1500 -400 BW28X20X6X4 NS 794'-0 1/2"					46
45	1000 300 0 W12X252 EW							1600 600 -300 W14x665 NS	3500 1100 0 W14x665 EW											3700 1200 0 W14x605 NS	5200 1700 0 BW28X18X6X4 NS	4100 1400 0 W14x730+1*PL NS	3500 1100 0 W14x730 NS	500 100 0 W14x398 NS		4400 1500 -300 BW28X22X6X4 NS					45
44	1100 300 0 W12X252 EW 767'-0 1/2"							1600 600 -300 W14x665 NS 767'-0 1/2"	3600 1100 0 W14x665 EW 767'-0 1/2"											3800 1200 0 W14x605 NS 767'-0 1/2"	5300 1800 0 BW28X18X6X4 NS 767'-0 1/2"	4200 1400 0 W14x730+1*PL NS 767'-0 1/2"	3600 1200 0 W14x730 NS 767'-0 1/2"	600 200 0 W14x398 NS 767'-0 1/2"		4500 1500 -200 BW28X22X6X4 NS 767'-0 1/2"					44
43	1300 300 0 W12x279 EW							1700 600 -200 W14x665 NS	3600 1100 0 W14x665 EW											3900 1200 0 W14x665 NS	5400 1800 0 BW28X18X6X4 NS	4400 1400 0 W14x730+1*PL NS	3700 1200 0 W14x730 NS	700 200 0 W14x426 NS		4600 1500 -200 BW28X22X6X4 NS					43
42	1400 300 0 W12x279 EW 740'-0 1/2"							1800 600 -200 W14x665 NS 740'-0 1/2"	3700 1100 0 W14x665 EW 740'-0 1/2"											3900 1200 0 W14x665 NS 740'-0 1/2"	5600 1800 0 BW28X18X6X4 NS 740'-0 1/2"	4500 1400 0 W14x730+1*PL NS 740'-0 1/2"	3800 1200 0 W14x730 NS 740'-0 1/2"	800 200 0 W14x426 NS 740'-0 1/2"		4700 1500 -100 BW28X22X6X4 NS 740'-0 1/2"					42
41	1600 400 0 W14x665 EW							1800 600 -100 W14x730 NS	3800 1100 0 BW24.625X18X6X4 EW											4000 1200 0 BW24.625X20X6X4 NS	5700 1800 0 BW28X24X6X4 NS	4600 1400 0 BW28X18X6X4 NS	3900 1200 0 W14x730+1*PL NS	900 200 0 W14x426 NS		4800 1500 0 BW28X24X6X7 NS					41
40	1700 400 0 W14x665 EW 712'-7"							1900 600 -100 W14x730 NS 712'-7"	3900 1100 0 BW24.625X18X6X4 EW 712'-7"											4100 1200 0 BW24.625X20X6X4 NS 712'-7"	5800 1800 0 BW28X24X6X4 NS 712'-7"	4700 1400 0 BW28X18X6X4 NS 712'-7"	4000 1200 0 W14x730+1*PL NS 712'-7"	900 200 0 W14x426 NS 712'-7"		4900 1600 0 BW28X24X6X7 NS 712'-7"					40
39U		2900 600 -1100 BW24.625X20X6X4 EW 5/8" FILLET						1900 500 -900 W14x730 NS	4300 1300 0 BW24.625X20X6X4 EW 5/8" FILLET											4800 1500 0 BW24.625X22X6X4 EW 5/8" FILLET	6000 1900 0 BW28X24X6X6 NS 5/8" FILLET	4700 1400 0 BW28X22X6X4 NS 5/8" FILLET	 BW28X20X6X4 NS 5/8" FILLET	1500 400 0 W14x550 NS		5100 1400 -800 BW28X24X6X9 NS					39U
39		3000 600 -1000 BW24.625X20X6X4 EW 5/8" FILLET 685'-7"						2000 500 -800 W14x730 NS 682'-7"	4400 1300 0 BW24.625X20X6X4 EW 5/8" FILLET 682'-7"											4800 1500 0 BW24.625X22X6X4 EW 5/8" FILLET 682'-7"	6200 1900 0 BW28X24X6X6 NS 5/8" FILLET 685'-7"	4800 1400 0 BW28X22X6X4 NS 5/8" FILLET 682'-7"	 BW28X20X6X4 NS 5/8" FILLET 682'-7"	1600 400 0 W14x550 NS 682'-7"	BS-1 682'-7"	5300 1400 -700 BW28X24X6X9 NS 682'-7"					39
38		4000 1000 -600 BW24.625X18X6X4 EW 671'-9 1/2"						2200 600 -700 W14x550 NS 668'-0 1/2"	4500 1400 0 BW24.625X18X6X4 EW 668'-0 1/2"											5000 1500 0 BW24.625X20X6X4 EW 668'-0 1/2"	7600 2300 0 BW28X24X6X8 NS 668'-0 1/2"	5700 1700 0 BW28X22X6X4 NS 668'-0 1/2"	5200 1500 0 BW28X18X6X4 NS 668'-0 1/2"	2600 700 0 W14x605 NS 668'-0 1/2"	400 200 -100 W14x176 NS 698'-0 1/2"	5500 1500 -600 BW28X24X6X4 NS 668'-0 1/2"					38
FLOOR / COLUMN MARK	A,9S/16	F,6/16	F,9/16	G,6/16	H,8/16	K/16	CS/16.1	ES/16.7	A,9S ABS/16.8	CS/16.8	B/17	C.1/17	C.9/17	D,8/17	E,8/17	F,9/17.0	G,6/17	H,8/17	JS/17.2	AS/17 A,S/17.1	B/17.1	C/17.1	D/17.1	E/17.1	F/17.1	BS/17 BS/17.1	P/1	P/2	P/3	P/4	FLOOR / COLUMN MARK

TYPICAL COLUMN SCHEDULE NOTES:
1. FOR TYPICAL COLUMN SCHEDULE NOTES SEE S5-1001.

Damian Titus
Building
APPROVED
Under Directive 2 of 1975
AMENDED APPLICATION
Date: 09/13/2017
NYC Development Hub

0 4' 8' 16'

N

HUDSON YARDS - RETAIL PODIUM AND TOWER A

500 WEST 33RD STREET
New York, NY

Client
Related Companies
60 Columbus Circle
New York, NY 10023
TEL: 212.801.1000 FAX: 212.801.1048

Oxford Properties Group
320 Park Avenue, 17th Floor
New York, NY 10022
TEL: 212.986.7514 FAX: 212.986.7510

Architect
Kohn Pedersen Fox Associates
11 West 42nd Street
New York, New York 10036
TEL: 212.977.6500 FAX: 212.956.2526

Structural Engineer
Thornton Tomasetti, Inc.
51 Madison Avenue
New York, New York 10010
TEL: 917.661.7800 FAX: 718.661.7801

Mechanical, Electrical, Plumbing, Fire Protection
Jaros Baum & Bolles Consulting Engineers
80 Pine Street
New York, NY 10013
TEL: 212.530.9300 FAX: 212.269.5894

Retail Interior Design & Planning
Elkus-Manfredi
300 A Street
Boston, MA 02210
TEL: 617.426.1300

No.	Description	Date
2	D.O.B. AMENDMENT #2	10/15/2016
1	D.O.B. BUILDING PERMIT FILING	12/10/2014

Key Plan

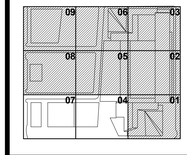

Issue Date: 12/10/2014
Project No. N11328.00
Drawn By: Author
Sheet Number

STATE OF NEW YORK — LICENSED PROFESSIONAL ENGINEER

HYE -TA -S5-2009

Drawing Title

COLUMN SCHEDULE III FLOORS 38-51

Drawing Number
S5-2009
B-Scan Drawing Number
S-726.01

© 2013 KOHN PEDERSEN FOX ASSOCIATES PC. All rights reserved.

S5-2009
10/17/2016 4:01:29 PM
COLUMN SCHEDULE III FLOORS 38-51
P:\NY\Projects\N11328.00\Drawings\Structural\Revit\Issued\2016-10-18 - D.O.B. Amendment No.2\Revit - Rev. Removed\HYE\TA TYP detail_Col Schedule.rvt

HUDSON YARDS - RETAIL PODIUM AND TOWER A

500 WEST 33RD STREET
New York, NY

TYPICAL COLUMN SCHEDULE NOTES:
1. FOR TYPICAL COLUMN SCHEDULE NOTES SEE S5-1001.

TYPICAL COLUMN SCHEDULE BID NOTES:
1. ALL MEMBER SIZES ARE SHOWN TO CONVEY THE APPROXIMATE SIZE ONLY TO ILLUSTRATE THE LEVEL OF COMPLEXITY. SIZES ARE SUBJECT TO CHANGE. DO NOT UTILIZE THESE SIZES FOR TAKE-OFFS. THE TONNAGE MATRIX SHALL BE USED EXCLUSIVELY FOR QUANTITY REVIEW.

FLOOR \ COLUMN MARK	B/13.2 B/13.1	C/13.2 C/13.1	D/13.2 D/13.1	[illegible]/13.2 [illegible]/13.1 COLUMN MARK	F/13.2 F/13.1	G/13.2 G/13.1	DS/13.2 DS/13.1	H/13.2	J/13.2	K/13.2	L/13.2	A.6/13.3	FS/13.3	HS/13.3
65														
64														
63														
62														
61														
60U	300 100 0 W14x283 NS	500 300 -600 W14X311 NS	500 300 -500 W14x283 NS	300 200 -400 W14x283 NS			500 300 -1600 W14x500 NS					200 100 0 W14x283 NS	200 200 -800 W14x283 EW	
60	300 100 0 W14x283 NS 987'-1"	500 300 -600 W14X311 NS 987'-1"	500 300 -400 W14x283 NS 987'-1"	400 200 -400 W14x283 NS 987'-1"			600 300 -1600 W14x500 NS 987'-1"					200 100 0 W14x283 NS 987'-1"	300 200 -800 W14x283 EW 987'-1"	
59	1000 400 -500 W14x283 NS	800 400 -500 W14X311 NS	600 300 -400 W14x283 NS	500 300 -300 W14x283 NS			900 400 -1500 W14x500 NS					1700 700 -600 W14x426 NS	300 200 -700 W14x283 EW	
58	1000 500 -500 W14x283 NS 956'-0 1/2"	900 400 -400 W14X311 NS 956'-0 1/2"	700 400 -300 W14x283 NS 956'-0 1/2"	600 300 -300 W14x283 NS 956'-0 1/2"			1000 500 -1400 W14x500 NS 956'-0 1/2"					1800 700 -600 W14x426 NS 956'-0 1/2"	400 200 -700 W14x283 EW 956'-0 1/2"	
57	1100 500 -400 W14x283 NS	1000 400 -300 W14x283 NS	800 400 -300 W14x283 NS	700 300 -200 W14x283 NS			1100 500 -1400 W14x398 NS					1900 700 -500 W14x426 NS	500 200 -600 W14x283 EW	
56	1200 500 -400 W14x283 NS 929'-0 1/2"	1100 400 -300 W14x283 NS 929'-0 1/2"	900 400 -200 W14x283 NS 929'-0 1/2"	800 300 -200 W14x283 NS 929'-0 1/2"			1200 500 -1300 W14x398 NS 929'-0 1/2"					1900 700 -500 W14x426 NS 929'-0 1/2"	500 200 -600 W14x283 EW 929'-0 1/2"	
55	1300 500 -300 W14X311 NS	1200 400 -200 W14x283 NS	1000 400 -200 W14x283 NS	800 400 -100 W14x283 NS			1200 500 -1300 W14x398 NS					2000 700 -400 W14x426 NS	600 300 -600 W14x283 EW	
54	1400 500 -300 W14X311 NS 902'-0 1/2"	1200 400 -200 W14x283 NS 902'-0 1/2"	1100 400 -100 W14x283 NS 902'-0 1/2"	900 400 -100 W14x283 NS 902'-0 1/2"			1300 500 -1200 W14x398 NS 902'-0 1/2"					2100 700 -400 W14x426 NS 902'-0 1/2"	600 300 -500 W14x283 EW 902'-0 1/2"	
53	1500 500 -200 W14x342 NS	1300 500 -100 W14x283 NS	1200 400 -100 W14x283 NS	1000 400 0 W14x283 NS			1400 500 -1200 W14x426 NS					2200 700 -400 W14x455 NS	700 300 -500 W14x283 EW	
52	1600 600 -200 W14x342 NS 875'-0 1/2"	1400 500 -100 W14x283 NS 875'-0 1/2"	1300 500 0 W14x283 NS 875'-0 1/2"	1100 400 0 W14x283 NS 875'-0 1/2"			1500 500 -1100 W14x426 NS 875'-0 1/2"					2200 700 -300 W14x455 NS 875'-0 1/2"	700 300 -500 W14x283 EW 875'-0 1/2"	

FLOOR \ COLUMN MARK	A/2S AB/2S	CS/2S	FS/13.9	HS/13.9	B/14	C/14	C.1/14	D/14	D.1/14	E/14	E.1/14	F/14	A.9S/14	F.6/14
65	900 400 0 W14X311 EW 1083'-1"	1500 700 0 W14x426 EW 1086'-1"												
64	1000 500 0 W14X311 EW 1068'-6 1/2"	1600 700 0 W14x426 EW 1068'-6 1/2"												
63	1000 500 0 W14x283 EW	1700 700 0 W14x426 EW												
62	1100 500 0 W14x283 EW 1041'-1"	1700 700 0 W14x426 EW 1041'-1"												
61	1100 500 0 W14x550 NS	1800 700 0 W14x550 NS												
60U	2400 1100 0 W14x730 EW		300 400 0 W14x283 EW		2700 1400 -200 BW24.625X20X6X4 EW		2600 1800 BW24.625X18X6X4 EW		3000 1400 BW24.625X18X6X4 EW		3400 1400 -3900 BW24.625X24X6X4 EW			
60	2500 1100 0 W14x730 EW 987'-1"		300 400 0 W14x283 EW 987'-1"		2800 1500 -100 BW24.625X20X6X4 EW 987'-1"		2700 1800 BW24.625X18X6X4 EW 987'-1"		3100 1400 BW24.625X18X6X4 EW 987'-1"		3400 1400 -3900 BW24.625X24X6X4 EW 987'-1"			
59	2800 1200 -200 W14x730 EW		600 500 -1200 W14x283 EW		4000 1700 -1300 BW24.625X20X6X4 EW		3800 2000 BW24.625X18X6X4 EW		3700 1600 BW24.625X18X6X4 EW		4200 1700 -2800 BW24.625X24X6X4 EW			
58	2900 1300 -100 W14x730 EW 956'-0 1/2"		700 500 -1200 W14x283 EW 956'-0 1/2"		4900 1900 BW24.625X20X6X4 EW 956'-0 1/2"		4400 2100 BW24.625X18X6X4 EW 956'-0 1/2"		3900 1700 0 BW24.625X18X6X4 EW 5/8" FILLET 956'-0 1/2"		4400 1800 -2700 BW24.625X24X6X4 EW 5/8" FILLET 955'-9 1/2"			
57	3000 1300 -100 W14x605 EW		800 600 -1100 W14x283 EW		5300 2000 BW24.625X22X6X4 EW		4600 2100 BW24.625X18X6X4 EW		4000 1700 BW24.625X18X6X4 EW		4700 1800 -1800 BW24.625X24X6X4 EW 5/8" FILLET			
56	3100 1300 0 W14x605 EW 929'-0 1/2"		900 600 -1100 W14x283 EW 929'-0 1/2"		5700 2100 BW24.625X22X6X4 EW 929'-0 1/2"		4800 2200 BW24.625X18X6X4 EW 929'-0 1/2"		4200 1800 BW24.625X18X6X4 EW 929'-0 1/2"		4900 1900 -1000 BW24.625X24X6X4 EW 5/8" FILLET 928'-9 1/2"			
55	3200 1300 0 W14x665 EW		1000 600 -1000 W14x342 EW		6100 2200 BW24.625X22X6X4 EW		5000 2200 BW24.625X20X6X4 EW		4400 1800 BW24.625X18X6X4 EW		5100 1900 -300 BW24.625X24X6X4 EW 5/8" FILLET			
54	3300 1300 0 W14x665 EW 902'-0 1/2"		1100 600 -900 W14x342 EW 902'-0 1/2"		6500 2300 BW24.625X22X6X4 EW 902'-0 1/2"		5200 2300 BW24.625X20X6X4 EW 902'-0 1/2"		4600 1900 BW24.625X18X6X4 EW 902'-0 1/2"		5400 2000 0 BW24.625X24X6X4 EW 5/8" FILLET 901'-9 1/2"			
53	3400 1300 0 W14x665 EW		1200 600 -900 W14x342 EW		6800 2400 BW24.625X24X6X4 EW		5400 2300 BW24.625X20X6X4 EW		4800 1900 0 BW24.625X18X6X4 EW 5/8" FILLET		5600 2000 BW24.625X24X6X4 EW		100 100 0 W12X96 EW	
52	3500 1400 0 W14x665 EW 875'-0 1/2"		1300 700 -800 W14x342 EW 875'-0 1/2"		7300 2500 BW24.625X24X6X4 EW 875'-0 1/2"		5500 2300 0 BW24.625X20X6X4 EW 5/8" FILLET 875'-0 1/2"		5000 1900 0 BW24.625X18X6X4 EW 5/8" FILLET 874'-0 1/2"		5800 2000 0 BW24.625X24X6X4 EW 5/8" PJP 874'-0 1/2"		200 100 0 W12X96 EW 875'-0 1/2"	

FLOOR \ COLUMN MARK	F.9/14	G/14	H/14	J/14	K/14	A.4/1S	A.9/1S	B.9/1S	C.95/1S	BS/1S	B/14.3	C.1/14.3	D.1/14.3	A.9S/14.5
65						700 200 0 W14X311 NS 1083'-1"	1200 500 0 W14x455 NS 1083'-1"	1200 800 0 W14x426 NS 1083'-1"	800 300 0 W14x398 NS 1083'-1"	1700 1100 0 W14x550 NS 1086'-1"	1000 1100 -300 W14x730+1"PL EW 1086'-1"	800 1200 -100 W14x550 EW 1086'-1"	900 1000 0 W14x665 EW 1086'-1"	
64						800 300 0 W14x283 NS 1068'-6 1/2"	1300 600 0 W14x455 NS 1068'-6 1/2"	1300 900 0 W14X311 NS 1068'-6 1/2"	900 400 0 W14x283 NS 1068'-6 1/2"	1800 1100 0 W14x550 NS 1068'-6 1/2"	1400 1500 -500 W14x730 EW 1068'-6 1/2"	1100 1600 -100 W14x550 EW 1068'-6 1/2"	1100 1500 -200 W14x605 EW 1068'-6 1/2"	
63						800 300 0 W14x283 NS	1300 600 0 W14X311 NS	1400 900 0 W14X311 NS	900 400 0 W14x283 NS	1800 1200 0 W14x455 NS	1500 1600 -400 W14x500 EW	1200 1600 -100 W14x500 EW	1200 1500 -100 W14x605 EW	
62						900 300 0 W14x283 NS 1041'-1"	1400 600 0 W14X311 NS 1041'-1"	1400 900 0 W14X311 NS 1036'-1"	1000 400 0 W14x283 NS 1036'-1"	1800 1200 0 W14x455 NS 1041'-1"	1600 1700 -400 W14x500 EW 1041'-1"	1300 1600 0 W14x500 EW 1041'-1"	1300 1500 -100 W14x605 EW 1044'-1"	
61						1000 300 0 W14x398 NS	1500 600 0 W14x550 NS	1500 900 0 W14x550 NS	1100 400 0 W14x398 NS	1900 1200 0 W14x730 NS	1800 1700 -200 W14x665 NS	1400 1700 0 W14x665 NS	1300 1500 0 W14x665 NS	
60U														
60														
59														
58														
57														
56														
55														
54														
53														100 100 0 W12X96 EW
52														200 100 0 W12X96 EW 875'-0 1/2"

FLOOR COLUMN MARK B/13.2 B/13.1 C/13.2 C/13.1 D/13.2 D/13.1 /13.2 /13.1 COLUMN MARK F/13.2 F/13.1 G/13.2 G/13.1 DS/13.2 DS/13.1 H/13.2 J/13.2 K/13.2 L/13.2 A.6/13.3 FS/13.3 HS/13.3 A/2S AB/2S CS/2S FS/13.9 HS/13.9 B/14 C/14 C.1/14 D/14 D.1/14 E/14 E.1/14 F/14 A.9S/14 F.6/14 F.9/14 G/14 H/14 J/14 K/14 A.4/1S A.9/1S B.9/1S C.95/1S BS/1S B/14.3 C.1/14.3 D.1/14.3 A.9S/14.5 COLUMN MARK FLOOR

0 4' 8' 16'

N

Client
Related Companies
60 Columbus Circle
New York, NY 10023
TEL: 212.801.1000 FAX: 212.801.1048

Oxford Properties Group
320 Park Avenue, 17th Floor
New York, NY 10022
TEL: 212.986.7514 FAX: 212.986.7510

Architect
Kohn Pedersen Fox Associates
11 West 42nd Street
New York, New York 10036
TEL: 212.977.6500 FAX: 212.956.2526

Structural Engineer
Thornton Tomasetti, Inc.
51 Madison Avenue
New York, New York 10010
TEL: 917.661.7800 FAX: 718.661.7801

Mechanical, Electrical, Plumbing, Fire Protection
Jaros Baum & Bolles Consulting Engineers
80 Pine Street
New York, NY 10013
TEL: 212.530.9300 FAX: 212.269.5894

Retail Interior Design & Planning
Elkus-Manfredi
300 A Street
Boston, MA 02210
TEL: 617.426.1300

No.	Description	Date
2	D.O.B. AMENDMENT #2	10/15/2016
1	D.O.B. BUILDING PERMIT FILING	12/10/2014

Key Plan

09 06 03
08 05 02
07 04 01

Issue Date: 12/10/2014
Project No. N11328.00
Drawn By Author
Sheet Number

STATE OF NEW YORK · MICHAEL J. SQUARZINI · LICENSED PROFESSIONAL ENGINEER · No. 080340

HYE -TA -S5-2010

Drawing Title

COLUMN SCHEDULE I FLOORS 52-64U

Drawing Number
S5-2010
B-Scan Drawing Number
S-727.01

SHEET 363 OF 443

Damian Titus
NYC Buildings
APPROVED
Under Directive 2 of 1975
AMENDED APPLICATION
Date: 05/03/2017
NYC Development Hub

DEPT OF BLDGS 121186251 Job Number
ES784793789 Scan Code

S5-2010
10/17/2016 4:01:32 PM
COLUMN SCHEDULE I FLOORS 52-64U
P:\NY1\Projects\N11328.00\Drawings\Structural\Record\Issued\2016-10-16 - D.O.B. Amendment No.2\Revit - Rev. Removed\HYTA TYP detail_Col.Schedule.rvt

© 2013 KOHN PEDERSEN FOX ASSOCIATES PC. All rights reserved.

FLOOR \ COLUMN MARK	F.9/14.5	FS/14.6	HS/14.6	A/14.7 AB/14.7	B.0/14.7	C.1/14.7	C.95/14.7	D.1/14.7	CS/14.75	B/15	C.1/15	C.9/15	C.95/15.0	D.1/15
65				600 200 0 W14x283 EW 1083'-1"	1000 700 0 W14x370 EW 1084'-1"	1500 1900 0 W14x665 EW 1084'-1"		900 1400 0 W14x426 EW 1086'-1"	1300 700 0 W14x426 NS 1083'-1"	2400 2400 BW24.625X18X6X4 EW 1086'-1"	2200 2500 0 W14x730+1"PL EW 1086'-1"			1300 1100 BW24.625X18X6X4 EW 1086'-1"
64				700 400 0 W14x283 EW 1068'-6 1/2"	1100 1200 0 W14x370 EW 1071'-6 1/2"	1700 2000 0 W14x550 EW 1071'-6 1/2"		1000 1500 0 W14x342 EW 1071'-6 1/2"	1400 800 0 W14x426 NS 1068'-6 1/2"	3000 2700 BW24.625X20X6X4 EW 1071'-6 1/2"	2900 3000 0 W14x730+1"PL EW 1071'-6 1/2"			2200 2200 0 W14x730+1"PL EW 1071'-6 1/2"
63				800 400 0 W14x283 EW	1300 1400 -100 W14x455 EW	1800 2000 0 W14x550 EW		1100 1500 -200 W14x342 EW	1400 800 0 W14x426 NS	3200 2600 0 BW24.625X20X6X4 EW 5/8" FILLET	3000 2800 0 W14x730+1"PL EW			2400 2100 0 W14x730+1"PL EW
62				900 400 0 W14x283 EW 1041'-1"	1500 1600 -800 W14x455 EW 1044'-1"	1800 2000 0 W14x550 EW 1044'-1"		1100 1100 0 W14x342 EW 1044'-1"	1500 800 0 W14x426 NS 1041'-1"	3400 2500 BW24.625X20X6X4 EW 1044'-1"	3100 2700 0 W14x730+1"PL EW 1044'-1"			2500 2000 0 W14x730+1"PL EW 1044'-1"
61				1000 400 0 W14x342 NS	1300 800 0 W14x283 NS	1700 2000 0 W14x283 NS		1100 1200 0 W14x283 NS	1600 800 0 W14x500 NS	3000 2000 0 BW24.625X20X6X4 NS	2900 2700 0 BW24.625X18X6X4 NS			2500 1800 0 BW24.625X20X6X4 NS
60U		300 400 -800 W14x283 EW		1200 500 0 W14x398 EW						4500 2700 BW24.625X24X6X4 EW	4800 3200 BW24.625X24X6X4 EW			6500 2900 BW24.625X28X6X6 EW
60		300 400 -800 W14x283 EW 984'-1"		1300 500 0 W14x398 EW 984'-1"						4500 2700 BW24.625X24X6X4 EW 987'-1"	4900 3200 BW24.625X24X6X4 EW 987'-1"			6600 3000 BW24.625X28X6X6 EW 987'-1"
59		500 500 -700 W14x283 EW		1400 600 0 W14x398 EW						4800 2900 BW24.625X24X6X4 EW	5300 3500 BW24.625X26X6X4 EW			6900 3200 BW24.625X28X6X4 EW
58		600 500 -600 W14x283 EW 956'-0 1/2"		1500 700 0 W14x398 EW 956'-0 1/2"						5500 3000 BW24.625X24X6X4 EW 959'-0 1/2"	5500 3500 BW24.625X26X6X4 EW 959'-0 1/2"			7100 3200 BW24.625X28X6X4 EW 956'-0 1/2"
57		700 500 -600 W14x283 EW		1600 700 0 W14x342 EW						5700 3000 BW24.625X24X6X4 EW	5700 3600 BW24.625X26X6X4 EW			7300 3300 BW24.625X28X6X4 EW
56		800 500 -500 W14x283 EW 929'-0 1/2"		1600 700 0 W14x342 EW 929'-0 1/2"						6000 3100 BW24.625X24X6X4 EW 932'-0 1/2"	5900 3600 BW24.625X26X6X4 EW 932'-0 1/2"			7500 3300 BW24.625X28X6X4 EW 929'-0 1/2"
55		900 600 -400 W14x283 EW		1700 700 0 W14x342 EW						6200 3100 BW24.625X26X6X4 EW	6000 3700 BW24.625X26X6X4 EW			7600 3400 BW24.625X28X6X4 EW
54		1000 600 -400 W14x283 EW 902'-0 1/2"		1800 700 0 W14x342 EW 902'-0 1/2"						6500 3200 BW24.625X26X6X4 EW 905'-0 1/2"	6200 3700 BW24.625X26X6X4 EW 905'-0 1/2"			7800 3400 BW24.625X28X6X4 EW 902'-0 1/2"
53		1000 600 -300 W14x283 EW		1900 700 0 W14x342 EW						6700 3200 BW24.625X26X6X4 EW	6400 3800 BW24.625X26X6X4 EW			8000 3500 BW24.625X28X6X4 EW
52		1100 600 -300 W14x283 EW 875'-0 1/2"		2000 700 0 W14x342 EW 875'-0 1/2"						6900 3300 BW24.625X26X6X4 EW 878'-0 1/2"	6500 3800 BW24.625X26X6X4 EW 878'-0 1/2"			8200 3500 0 BW24.625X28X6X4 EW 5/8" FILLET 875'-0 1/2"

FLOOR \ COLUMN MARK	D.8/15	E.1/15	E.8/15	A.9S/15	F.6/15	F.9/15	H/15	J/15	K/15	F.9/15.1	FS/15.1	HS/15.1	A/15.2 AB/15.2	CS/15.3
65													1500 700 0 W14x500 EW 1083'-1"	1200 500 0 W14x398 EW 1083'-1"
64													1600 800 0 W14x500 EW 1068'-6 1/2"	1300 500 0 W14x398 EW 1068'-6 1/2"
63													1700 800 0 W14x398 EW	1300 600 0 W14x342 EW
62													1800 900 0 W14x398 EW 1041'-1"	1400 600 0 W14x342 EW 1041'-1"
61													2000 900 0 W14x605 NS	1500 600 0 W14x398 NS
60U		2800 1100 BW24.625X18X6X4 EW									300 400 -700 W14x283 EW		2600 1100 0 W14x730 EW	
60		2800 1100 BW24.625X18X6X4 EW 987'-1"									300 400 -700 W14x283 EW 984'-1"		2700 1100 0 W14x730 EW 984'-1"	
59		3400 1400 BW24.625X18X6X4 EW									500 500 -700 W14x283 EW		2800 1200 0 W14x730 EW	
58		3600 1400 0 BW24.625X18X6X4 EW 5/8" FILLET 956'-0 1/2"									600 500 -600 W14x283 EW 956'-0 1/2"		2900 1200 0 W14x730 EW 956'-0 1/2"	
57		3900 1500 0 BW24.625X18X6X4 EW 5/8" FILLET									700 500 -600 W14x283 EW		3000 1300 0 W14x605 EW	
56		4100 1500 BW24.625X18X6X4 EW 929'-0 1/2"									800 600 -500 W14x283 EW 929'-0 1/2"		3100 1300 0 W14x605 EW 929'-0 1/2"	
55		4300 1600 BW24.625X18X6X4 EW									900 600 -400 W14x283 EW		3200 1300 0 W14x605 EW	
54		4500 1600 BW24.625X18X6X4 EW 902'-0 1/2"									1000 600 -400 W14x283 EW 902'-0 1/2"		3300 1300 0 W14x605 EW 902'-0 1/2"	
53		4700 1700 BW24.625X18X6X4 EW		100 100 0 W12X96 EW							1000 600 -300 W14x283 EW		3400 1300 0 W14x605 EW	
52		4900 1700 BW24.625X18X6X4 EW 875'-0 1/2"		100 100 0 W12X96 EW 875'-0 1/2"							1100 600 -300 W14x283 EW 875'-0 1/2"		3600 1300 0 W14x605 EW 875'-0 1/2"	

FLOOR \ COLUMN MARK	A.9S/15.4	HS/15.7	FS/15.9	A/15.95 AB/15.95	B/16	C.1/16	C.9/16	C.95/16.0	D.1/16	D.8/16	D.9/16	E.1/16	E.7/16	E.8/16
65				1400 1000 0 W14x665 EW 1083'-1"	3300 2700 BW24.625X22X6X4 EW 1086'-1"	2000 1400 0 W14x665 EW 1084'-1"			1500 1000 0 W14x550 EW 1086'-1"					
64				1600 1200 0 W14x665 EW 1068'-6 1/2"	4000 3100 BW24.625X22X6X4 EW 1069'-6 1/2"	2500 1700 0 W14x730 EW 1071'-6 1/2"			2500 1600 -200 W14x730 EW 1071'-6 1/2"					
63				1700 1200 0 W14x550 EW	4300 3000 BW24.625X22X6X4 EW	2700 1700 0 W14x730 EW			2500 1600 -500 W14x730 EW					
62				1800 1200 0 W14x550 EW 1041'-1"	4200 2800 BW24.625X22X6X4 EW 1042'-1"	2600 1600 0 W14x730 EW 1042'-1"			2600 1600 -800 W14x730 EW 1044'-1"					
61				2000 1200 0 W14x730 NS	4600 2800 0 BW24.625X26X6X4 NS	2900 1700 0 BW24.625X18X6X4 NS			2800 1700 -900 BW24.625X22X6X4 NS					
60U			600 600 0 W14x370 EW	2500 1600 BW24.625X18X6X4 EW	4100 2800 BW24.625X24X6X4 EW	3300 1900 BW24.625X18X6X4 EW			2600 1600 -100 BW24.625X18X6X4 EW			BW24.625X18X6X4 EW		
60			600 600 0 W14x370 EW 987'-1"	2500 1600 BW24.625X18X6X4 EW 987'-1"	4200 2800 BW24.625X24X6X4 EW 987'-1"	3400 1900 BW24.625X18X6X4 EW 987'-1"			2700 1600 -100 BW24.625X18X6X4 EW 987'-1"			2300 800 -800 BW24.625X18X6X4 EW 987'-1"		
59			1000 700 -1500 W14x455 EW	3600 1700 BW24.625X18X6X4 EW	4600 3000 BW24.625X24X6X4 EW	4000 2100 BW24.625X18X6X4 EW			3200 1800 BW24.625X18X6X4 EW			2800 1400 -2900 BW24.625X18X6X4 EW		
58			1200 800 -1400 W14x455 EW 956'-0 1/2"	3700 1700 BW24.625X18X6X4 EW 956'-0 1/2"	5000 3100 BW24.625X24X6X4 EW 959'-0 1/2"	4200 2100 BW24.625X18X6X4 EW 959'-0 1/2"			3400 1800 0 BW24.625X18X6X4 EW 5/8" FILLET 956'-6 1/2"			3000 1500 -2700 BW24.625X18X6X4 EW 956'-0 1/2"		
57			1300 800 -1300 W14x455 EW	3800 1700 0 W14x730 EW	5300 3100 BW24.625X24X6X4 EW	4400 2200 BW24.625X18X6X4 EW			3500 1900 BW24.625X18X6X4 EW			3200 1500 -1900 BW24.625X18X6X4 EW		
56			1400 800 -1300 W14x455 EW 929'-0 1/2"	3900 1800 0 W14x730 EW 929'-0 1/2"	5700 3200 BW24.625X24X6X4 EW 932'-0 1/2"	4600 2200 BW24.625X18X6X4 EW 932'-0 1/2"			3700 1900 BW24.625X18X6X4 EW 929'-6 1/2"			3500 1500 -1200 BW24.625X18X6X4 EW 929'-0 1/2"		
55			1500 800 -1200 W14x455 EW	4100 1800 0 W14x730 EW	6000 3200 BW24.625X26X6X4 EW	4800 2200 BW24.625X18X6X4 EW			3800 1900 BW24.625X18X6X4 EW			3700 1600 -500 BW24.625X18X6X4 EW		
54			1700 800 -1100 W14x455 EW 902'-0 1/2"	4200 1800 0 W14x730 EW 902'-0 1/2"	6400 3200 BW24.625X26X6X4 EW 905'-0 1/2"	4900 2300 BW24.625X18X6X4 EW 905'-0 1/2"			4000 2000 BW24.625X18X6X4 EW 902'-0 1/2"			3900 1600 BW24.625X18X6X4 EW 902'-0 1/2"		
53	100 100 0 W12X96 EW		1800 900 -1000 W14x500 EW	4300 1800 0 W14x730 EW	6800 3300 BW24.625X26X6X4 EW	5100 2300 BW24.625X20X6X4 EW			4200 2000 BW24.625X18X6X4 EW			4100 1600 BW24.625X18X6X4 EW		
52	100 100 0 W12X96 EW 875'-0 1/2"		1900 900 -1000 W14x500 EW 875'-0 1/2"	4400 1800 0 W14x730 EW 875'-0 1/2"	7200 3300 BW24.625X26X6X4 EW 878'-0 1/2"	5300 2300 BW24.625X20X6X4 EW 878'-0 1/2"			4400 2000 BW24.625X18X6X4 EW 875'-0 1/2"			4300 1700 BW24.625X18X6X4 EW 875'-0 1/2"		

TYPICAL COLUMN SCHEDULE NOTES:
1. FOR TYPICAL COLUMN SCHEDULE NOTES SEE S5-1001.

TYPICAL COLUMN SCHEDULE BID NOTES:
1. ALL MEMBER SIZES ARE SHOWN TO CONVEY THE APPROXIMATE SIZE ONLY TO ILLUSTRATE THE LEVEL OF COMPLEXITY. SIZES ARE SUBJECT TO CHANGE. DO NOT UTILIZE THESE SIZES FOR TAKE-OFFS. THE TONNAGE MATRIX SHALL BE USED EXCLUSIVELY FOR QUANTITY REVIEW.

DEPT OF BLDGS 121186251 Job Number
ES092721956 Scan Code

HUDSON YARDS - RETAIL PODIUM AND TOWER A

500 WEST 33RD STREET
New York, NY

Client
Related Companies
60 Columbus Circle
New York, NY 10023
TEL: 212.801.1000 FAX: 212.801.1048

Oxford Properties Group
320 Park Avenue, 17th Floor
New York, NY 10022
TEL: 212.986.7514 FAX: 212.986.7510

Architect
Kohn Pedersen Fox Associates
11 West 42nd Street
New York, New York 10036
TEL: 212.977.6500 FAX: 212.956.2526

Structural Engineer
Thornton Tomasetti, Inc.
51 Madison Avenue
New York, New York 10010
TEL: 917.661.7800 FAX: 718.661.7801

Mechanical, Electrical, Plumbing, Fire Protection
Jaros Baum & Bolles Consulting Engineers
80 Pine Street
New York, NY 10013
TEL: 212.530.9300 FAX: 212.269.5894

Retail Interior Design & Planning
Elkus-Manfredi
300 A Street
Boston, MA 02210
TEL: 617.426.1300

No.	Description	Date
2	D.O.B. AMENDMENT #2	10/15/2016
1	D.O.B. BUILDING PERMIT FILING	12/10/2014

Key Plan

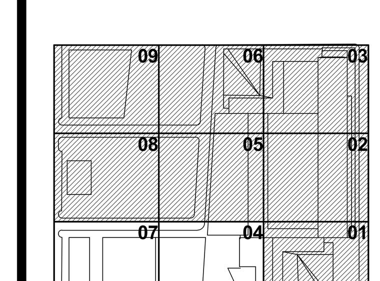

Damian Titus
Buildings
APPROVED
Under Directive 2 of 1975
AMENDED APPLICATION
Date: 05/03/2017
NYC Development Hub

0 4' 8' 16'

N

Issue Date: 12/10/2014
Project No. N11328.00
Drawn By Author
Sheet Number
HYE -TA -S5-2011

Drawing Title
COLUMN SCHEDULE II FLOORS 52-64U

Drawing Number
S5-2011
B-Scan Drawing Number
S-728.01

SHEET 364 OF 443

© 2013 KOHN PEDERSEN FOX ASSOCIATES PC. All rights reserved.

S5-2011
10/17/2016 4:01:35 PM
COLUMN SCHEDULE II FLOORS 52-64U
P:\NY1\Projects\N11328.00\Drawings\Structural\Record\Issued\2016-10-16 - D.O.B. Amendment No.2\Revit - Rev. Removed\HYTA TYP detail_Col.Schedule.rvt

DEPT OF BLDGS 321490255 Job Number
ES0907134R5 Scan Code

COLUMN MARK / FLOOR	A-S5/16	F-B/16	F-3/16	G-B/16	H-B/16	K/16	CS/16.1	ES/16.7	A-S3 AS/16.6	CS/16.8	B/17	C.1/17	C-3/17	D-B/17	E-B/17	F-3/17.0	G-B/17	H-B/17	JS/17.2	AS/17 AS/17.1	B/17.1	C/17.1	D/17.1	E/17.1	F/17.1	BS/17 BS/17.1	P/1	P/2	P/3	P/4	COLUMN MARK / FLOOR
65							1100 400 0 W14x342 EW 1083'-1"		1100 300 0 W14x370 EW 1083'-1"	600 200 0 W14x283 EW 1086'-1"										900 300 0 W14x398 NS 1083'-1"	1400 700 0 W14x455 NS 1083'-1"	1400 500 0 W14x398 NS 1083'-1"	400 200 0 W14x283 NS 1083'-1"			800 300 0 W14x283 NS 1083'-1"					65
64							1200 400 0 W14x283 EW 1068'-6 1/2"		1200 400 0 W14x342 EW 1068'-6 1/2"	700 300 0 W14x283 EW 1068'-6 1/2"										1000 400 0 W14x370 NS 1068'-6 1/2"	1500 900 0 W14x398 NS 1068'-6 1/2"	1500 700 0 W14x398 NS 1068'-6 1/2"	500 300 0 W14x283 NS 1068'-6 1/2"			900 400 0 W14x283 NS 1068'-6 1/2"					64
63							1200 500 0 W14x283 EW		1300 400 0 W14X311 EW	700 300 0 W14x283 EW										1100 400 0 W14x370 NS	1600 900 0 W14x370 NS	1600 700 0 W14x342 NS	600 300 0 W14x283 NS			1000 400 0 W14x283 NS					63
62							1300 500 0 W14x283 EW 1041'-1"		1300 400 0 W14X311 EW 1041'-1"	800 300 0 W14x283 EW 1041'-1"										1200 400 0 W14x370 NS 1041'-1"	1700 900 0 W14x370 NS 1041'-1"	1700 700 0 W14x342 NS 1041'-1"	700 400 0 W14x283 NS 1041'-1"			1000 400 0 W14x283 NS 1041'-1"					62
61							1400 500 0 W14x455 NS		1500 400 0 W14x665 NS	900 300 0 W14x283 NS										1300 400 0 W14x665 NS	1900 900 0 W14X730 NS	1900 700 0 W14x605 NS	900 400 0 W14x500 NS			1100 400 0 W14x550 NS					61
60U								200 300 0 W14x257 NS	1900 800 0 W14x665 EW											2300 900 0 W14X730 NS	2400 1200 0 W14X730 NS	2500 1100 0 W14X730 NS	1700 800 0 W14x605 NS			1800 800 -600 W14x665 NS					60U
60								200 300 0 W14x257 NS 984'-1"	1900 800 0 W14x665 EW 984'-1"											2300 900 0 W14X720 NS 984'-1"	2500 1200 0 W14X720 NS 987'-1"	2600 1100 0 W14X720 NS 984'-1"	1700 800 0 W14x605 NS 987'-1"			1800 800 -600 W14x665 NS 987'-1"					60
59								700 500 -800 W14x257 NS	2300 900 0 W14x665 EW											2600 1000 0 W14x730 NS	3500 1500 0 W14X730 NS	2700 1200 0 W14x730 NS	2000 900 0 W14x605 NS			2600 1200 -1300 W14x730 NS					59
58								800 500 -800 W14x257 NS 956'-0 1/2"	2400 900 0 W14x665 EW 956'-0 1/2"											2700 1000 0 W14x730 NS 956'-0 1/2"	3800 1500 0 W14X730 NS 956'-3 1/2"	2800 1200 0 W14x730 NS 956'-0 1/2"	2100 900 0 W14x605 NS 956'-0 1/2"			2700 1300 -1300 W14x730 NS 956'-0 1/2"					58
57								800 500 -800 W14x257 NS	2500 900 0 W14x500 EW											2700 1000 0 W14x500 NS	3800 1500 0 W14X730 NS	2900 1200 0 W14x605 NS	2200 900 0 W14x455 NS			2900 1300 -1200 W14x730 NS					57
56								900 500 -700 W14x257 NS 929'-0 1/2"	2600 900 0 W14x500 EW 929'-0 1/2"											2800 1100 0 W14x500 NS 929'-0 1/2"	3900 1600 0 W14X730 NS 929'-3 1/2"	3000 1200 0 W14x605 NS 929'-0 1/2"	2300 1000 0 W14x455 NS 929'-0 1/2"			3000 1300 -1100 W14x730 NS 929'-0 1/2"					56
55								900 500 -700 W14x283 NS	2700 900 0 W14x500 EW											2900 1100 0 W14x500 NS	4000 1600 0 W14X730 NS	3100 1200 0 W14x605 NS	2400 1000 0 W14x455 NS			3100 1300 -1500 BW24.625X18X0X4 EW					55
54								1000 500 -600 W14x283 NS 902'-0 1/2"	2700 1000 0 W14x500 EW 902'-0 1/2"											3000 1100 0 W14x500 NS 902'-0 1/2"	4100 1600 0 W14X730 NS 902'-3 1/2"	3200 1200 0 W14x605 NS 902'-0 1/2"	2500 1000 0 W14x455 NS 902'-0 1/2"			3300 1300 -1500 BW24.625X18X0X4 EW					54
53		100 100 0 W12X96 EW						1100 500 -600 W14x283 NS	2800 1000 0 W14x500 EW											3100 1100 0 W14x500 NS	4200 1600 0 W14X730 NS	3300 1200 0 W14x605 NS	2600 1000 0 W14x500 NS			3400 1300 -800 BW24.625X18X0X4 EW					53
52		200 100 0 W12X96 EW 875'-0 1/2"						1100 500 -600 W14x283 NS 875'-0 1/2"	2900 1000 0 W14x500 EW 875'-0 1/2"											3100 1100 0 W14x500 NS 875'-0 1/2"	4400 1600 0 W14X730 NS 875'-3 1/2"	3400 1300 0 W14x605 NS 875'-0 1/2"	2800 1000 0 W14x500 NS 875'-0 1/2"			3500 1400 -800 BW24.625X18X0X4 EW 875'-0 1/2"					52
FLOOR / COLUMN MARK	A-S5/16	F-B/16	F-3/16	G-B/16	H-B/16	K/16	CS/16.1	ES/16.7	A-S3 AS/16.6	CS/16.8	B/17	C.1/17	C-3/17	D-B/17	E-B/17	F-3/17.0	G-B/17	H-B/17	JS/17.2	AS/17 AS/17.1	B/17.1	C/17.1	D/17.1	E/17.1	F/17.1	BS/17 BS/17.1	P/1	P/2	P/3	P/4	FLOOR / COLUMN MARK

TYPICAL COLUMN SCHEDULE NOTES:
1. FOR TYPICAL COLUMN SCHEDULE NOTES SEE S5-1000.

TYPICAL COLUMN SCHEDULE BID NOTES:
1. ALL MEMBER SIZES ARE SHOWN TO CONVEY THE APPROXIMATE SIZE ONLY TO ILLUSTRATE THE LEVEL OF COMPLEXITY. SIZES ARE SUBJECT TO CHANGE. DO NOT UTILIZE THESE SIZES FOR TAKE-OFFS. THE TONNAGE MATRIX SHALL BE USED EXCLUSIVELY FOR QUANTITY REVIEW.

HUDSON YARDS - RETAIL PODIUM AND TOWER A
500 WEST 33RD STREET
New York, NY

Client
Related Companies
60 Columbus Circle
New York, NY 10023
TEL: 212.801.1000 FAX: 212.801.1048

Oxford Properties Group
320 Park Avenue, 17th Floor
New York, NY 10022
TEL: 212.986.7514 FAX: 212.986.7510

Architect
Kohn Pedersen Fox Associates
11 West 42nd Street
New York, New York 10036
TEL: 212.977.6500 FAX: 212.956.2526

Structural Engineer
Thornton Tomasetti, Inc.
51 Madison Avenue
New York, New York 10010
TEL: 917.661.7800 FAX: 718.661.7801

Mechanical, Electrical, Plumbing, Fire Protection
Jaros Baum & Bolles Consulting Engineers
80 Pine Street
New York, NY 10013
TEL: 212.530.9300 FAX: 212.269.5894

Retail Interior Design & Planning
Elkus-Manfredi
300 A Street
Boston, MA 02210
TEL: 617.426.1300

No.	Description	Date
2	D.O.B. AMENDMENT #2	10/15/2016
1	D.O.B. BUILDING PERMIT FILING	12/10/2014

Key Plan

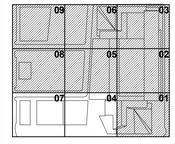

Issue Date: 12/10/2014
Project No. N11328.00
Drawn By: Author
Sheet Number

Bamian Titus
APPROVED
Under Directive 2 of 1975
AMENDED APPLICATION
Date: 05/9/2017
NYC Development Hub

HYE -TA -S5-2012
Drawing Title

COLUMN SCHEDULE III FLOORS 52-64U

Drawing Number
S5-2012
B-Scan Drawing Number
S-729.01

© 2013 KOHN PEDERSEN FOX ASSOCIATES PC. All rights reserved.

S5-2012
10/17/2016 4:01:38 PM COLUMN SCHEDULE III FLOORS 52-64U
P:\NY\Projects\N11328.00\Drawings\Structural\Record\Issued\2016-10-16 - D.O.B. Amendment No.2\Revit - Rev. Removed\HYTA TYP detail_Col Schedule.rvt

FLOOR \ COLUMN MARK	B0_13.0	C0_13.0	D0_13.0	E0_13.0	F0_13.0	G0_13.0	G8_13.0	H0_13.0	J0_13.0	K0_13.0	L0_13.0	A5_13.3	H7_13.3	L6_13.3	A0_13.7	E1_13.7	H7_13.9	L6_13.9	B0_14.0	C0_14.0	C1_14.0	D0_14.0	D1_14.0	E0_14.0	E1_14.0	F0_14.0	F1_14.0	F6_14.0	F8_14.0	G0_14.0	H0_14.0	J0_14.0	K0_14.0	A6_14.1	A9_14.1	B9_14.1	C9_14.1	G2_14.1	B0_14.3	C1_14.3	D1_14.3	F1_14.5	FLOOR \ COLUMN MARK
CROWN																																											CROWN
ROOF																																											ROOF
68															500 200 -200 W14x455 NS	400 100 -100 W14x283 NS																		400 100 -100 W14x426 NS	500 200 0 W14x283 NS	600 600 0 W14x342 NS		600 600 0 W14x311 NS					68
67															700 300 -100 W14x455 NS 1135'-7"	600 200 -100 W14x283 NS 1135'-7"																		500 200 0 W14x426 NS 1135'-7"	700 300 0 W14x283 NS 1135'-7"	800 700 0 W14x342 NS 1135'-7"		800 600 0 W14x311 NS 1135'-7"					67
66U															700 300 0 W14x283 NS	1100 500 0 W14x426 NS																		600 200 0 W14x311 NS	1000 500 0 W14x500 NS	1100 700 0 W14x605 NS	300 100 -100 W14x398 NS	1300 1000 0 W14x550 NS	200 100 0 W14x730 NS	200 100 0 W14x550 NS	100 100 0 W14x605 NS		66U
66															800 400 0 W14x283 NS 1110'-4"	1500 600 0 W14x426 NS 1110'-4"																		600 200 0 W14x311 NS 1110'-4"	1100 500 0 W14x500 NS 1110'-4"	1100 700 0 W14x605 NS 1110'-4"	300 100 -100 W14x398 NS 1110'-4"	1700 1100 0 W14x550 NS 1110'-4"	600 500 0 W14x730 NS 1113'-4"	500 600 0 W14x550 NS 1113'-4"	400 300 0 W14x605 NS 1113'-4"		66
65U															900 400 0 W14x311 NS	1500 700 0 W14x426 NS																		700 200 0 W14x311 NS	1200 500 0 W14x455 NS	1200 800 0 W14x426 NS	800 300 0 W14x398 NS	1700 1100 0 W14x550 NS	1000 1100 -300 W14x730+TPL NS	800 1200 -100 W14x550 NS	900 1000 0 W14x668 NS		65
FLOOR \ COLUMN MARK	B0_13.0	C0_13.0	D0_13.0	E0_13.0	F0_13.0	G0_13.0	G8_13.0	H0_13.0	J0_13.0	K0_13.0	L0_13.0	A5_13.3	H7_13.3	L6_13.3	A0_13.7	E1_13.7	H7_13.9	L6_13.9	B0_14.0	C0_14.0	C1_14.0	D0_14.0	D1_14.0	E0_14.0	E1_14.0	F0_14.0	F1_14.0	F6_14.0	F8_14.0	G0_14.0	H0_14.0	J0_14.0	K0_14.0	A6_14.1	A9_14.1	B9_14.1	C9_14.1	G2_14.1	B0_14.3	C1_14.3	D1_14.3	F1_14.5	FLOOR \ COLUMN MARK

TYPICAL COLUMN SCHEDULE NOTES:
1. FOR TYPICAL COLUMN SCHEDULE NOTES SEE S5-1001.

TYPICAL COLUMN SCHEDULE BID NOTES:
1. ALL MEMBER SIZES ARE SHOWN TO CONVEY THE APPROXIMATE SIZE ONLY TO ILLUSTRATE THE LEVEL OF COMPLEXITY. SIZES ARE SUBJECT TO CHANGE. DO NOT UTILIZE THESE SIZES FOR TAKE-OFFS. THE TONNAGE MATRIX SHALL BE USED EXCLUSIVELY FOR QUANTITY REVIEW.

DEPT OF BUILDINGS 321490255 Job Number
BSCS0813181 Scan Code

HUDSON YARDS - RETAIL PODIUM AND TOWER A

500 WEST 33RD STREET
New York, NY

Client
Related Companies
60 Columbus Circle
New York, NY 10023
TEL: 212.801.1000 FAX: 212.801.1048

Oxford Properties Group
320 Park Avenue, 17th Floor
New York, NY 10022
TEL: 212.986.7514 FAX: 212.986.7510

Architect
Kohn Pedersen Fox Associates
11 West 42nd Street
New York, New York 10036
TEL: 212.977.6500 FAX: 212.956.2526

Structural Engineer
Thornton Tomasetti, Inc.
51 Madison Avenue
New York, New York 10010
TEL: 917.661.7800 FAX: 718.661.7801

Mechanical, Electrical, Plumbing, Fire Protection
Jaros Baum & Bolles Consulting Engineers
80 Pine Street
New York, NY 10013
TEL: 212.530.9300 FAX: 212.269.5894

Retail Interior Design & Planning
Elkus-Manfredi
300 A Street
Boston, MA 02210
TEL: 617.426.1300

No.	Description	Date
2	D.O.B. AMENDMENT #2	10/15/2016
1	D.O.B. BUILDING PERMIT FILING	12/10/2014

Key Plan

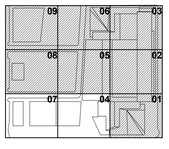

Issue Date: 12/10/2014
Project No. N11328.00
Drawn By: Author
Sheet Number

HYE -TA -S5-2013

Drawing Title

COLUMN SCHEDULE I FLOORS 65-TOP

Drawing Number
S5-2013
S-Scan Drawing Number
S-730.01

Damian Titus
APPROVED
Under Directive 2 of 1975
AMENDED APPLICATION
Date: 04/19/2017
NYC Development Hub

0 4' 8' 16'

N

© 2013 KOHN PEDERSEN FOX ASSOCIATES PC. All rights reserved.

S5-2013
10/17/2016 4:01:38 PM
COLUMN SCHEDULE I FLOORS 65 TOP
P:\NY\Projects\N11328.00\Drawings\Structural\Record\Issued\2016-10-16 - D.O.B. Amendment No.2\Revit - Rev- Removed\HYTA TYP detail_Col Schedule.rvt

DEPT OF BUILDINGS Job Number
Scan Code

COLUMN MARK / FLOOR	F.9\14.5	FS\14.6	HS\14.6	A\14.7 AB\14.7	B.0\14.7	C.1\14.7	C.95\14.7	D.1\14.7	CS\14.75	B\15	C.1\15	C.9\15	C.95\15.0	D.1\15	D.8\15	E.1\15	E.9\15	A.9S\15	F.6\15	F.9\15	H\15	J\15	K\15	F.9\15.1	FS\15.1	HS\15.1	A\15.2 AB\15.2	CS\15.3	A.9S\15.4	HS\15.7	FS\15.9	A\15.95 AB\15.95	B\16	C.1\16	C.9\16	C.95\16.0	D.1\16	D.8\16	D.9\16	E.1\16	E.7\16	E.8\16	COLUMN MARK / FLOOR
CROWN																																										CROWN
ROOF																																										ROOF
68					500 400 -200 W14x370 EW	900 3200 0 BW24.625X18X6X4 EW EW	500 1400 0 W14x665 EW			900 1100 0 W14x665 EW	1200 2000 0 W14x665 EW		700 800 0 W14x445 EW													500 300 0 W14x550 EW	500 100 0 W14x283 EW				700 700 0 W14x455 EW	1200 1600 0 W14x730 EW	1100 800 0 W14x500 EW		700 600 0 W14x426 EW							68
67					700 1200 -500 W14x370 EW 1138'-7"	1100 4200 0 BW24.625X18X6X4 EW EW 1138'-7"	1200 3000 0 W14x665 EW 1135'-7"			1400 1600 0 W14x665 EW 1138'-7"	1600 2600 0 W14x665 EW 1138'-7"		1000 1800 0 W14x445 EW 1138'-7"													800 400 0 W14x550 EW 1135'-7"	600 200 0 W14x283 EW 1135'-7"				900 800 0 W14x455 EW 1135'-7"	1700 1900 0 W14x730 EW 1138'-7"	1400 1100 0 W14x500 EW 1138'-7"		1000 800 0 W14x426 EW 1136'-0"							67
66U				200 100 0 W14x283 EW	800 900 -100 W14x398 EW	1200 4200 0 BW24.625X18X6X4 EW EW	1300 3100 0 W14x730+1*PL EW	300 500 -100 W14x342 EW	900 500 0 W14x426 NS	1500 1800 0 BW24.625X18X6X4 EW=>	1600 2600 0 W14x730+1*PL EW		1200 2000 0 W14x605 EW	500 300 0 W14x665 EW													1000 500 0 W14x455 EW	900 400 0 W14x665 EW				1100 900 0 W14x665 EW	2300 2100 0 BW24.625X20X6X4 EW=>	1400 1000 0 W14x550 EW		1300 900 0 W14x550 EW	300 200 0 W14x455 EW					66U
66				400 200 0 W14x283 EW 1110'-4"	900 800 0 W14x398 EW 1113'-4"	1300 2200 0 BW24.625X18X6X4 EW EW 1113'-4"	700 1600 0 W14x730+1*PL EW 1105'-4"	700 600 -100 W14x342 EW 1113'-4"	1200 600 0 W14x426 NS 1110'-4"	1600 1800 0 BW24.625X18X6X4 EW=> 1113'-4"	1700 2300 0 W14x730+1*PL EW 1113'-4"		1100 1200 0 W14x605 EW 1105'-4"	600 300 0 W14x665 EW 1113'-4"													1200 600 0 W14x455 EW 1110'-4"	1100 400 0 W14x665 EW 1110'-4"				1200 900 0 W14x665 EW 1110'-4"	2400 2100 0 BW24.625X20X6X4 EW=> 1113'-4"	1600 1000 0 W14x550 EW 1113'-4"		1400 900 0 W14x550 EW 1110'-6"	500 300 0 W14x455 EW 1113'-4"					66
65U				600 200 0 W14x283 EW	1000 700 0 W14x370 EW	1500 1900 0 W14x665 EW		900 1400 0 W14x426 EW	1300 700 0 W14x426 NS	2400 2400 0 BW24.625X18X6X4 EW=>	2200 2500 0 W14x730+1*PL EW			1300 1100 0 BW24.625X18X6X4 EW=>													1500 700 0 W14x550 EW	1200 500 0 W14x398 EW				1400 1000 0 W14x665 EW	3300 2700 0 BW24.625X22X6X4 EW=>	2000 1400 0 W14x665 EW			1500 1000 0 W14x550 EW					65U
FLOOR / COLUMN MARK	F.9\14.5	FS\14.6	HS\14.6	A\14.7 AB\14.7	B.0\14.7	C.1\14.7	C.95\14.7	D.1\14.7	CS\14.75	B\15	C.1\15	C.9\15	C.95\15.0	D.1\15	D.8\15	E.1\15	E.9\15	A.9S\15	F.6\15	F.9\15	H\15	J\15	K\15	F.9\15.1	FS\15.1	HS\15.1	A\15.2 AB\15.2	CS\15.3	A.9S\15.4	HS\15.7	FS\15.9	A\15.95 AB\15.95	B\16	C.1\16	C.9\16	C.95\16.0	D.1\16	D.8\16	D.9\16	E.1\16	E.7\16	E.8\16	FLOOR / COLUMN MARK

TYPICAL COLUMN SCHEDULE NOTES:
1. FOR TYPICAL COLUMN SCHEDULE NOTES SEE S5-1001.

TYPICAL COLUMN SCHEDULE BID NOTES:
1. ALL MEMBER SIZES ARE SHOWN TO CONVEY THE APPROXIMATE SIZE ONLY TO ILLUSTRATE THE LEVEL OF COMPLEXITY. SIZES ARE SUBJECT TO CHANGE. DO NOT UTILIZE THESE SIZES FOR TAKE-OFFS. THE TONNAGE MATRIX SHALL BE USED EXCLUSIVELY FOR QUANTITY REVIEW.

Damian Titus
Buildings
APPROVED
Under Directive 2 of 1975
AMENDED APPLICATION
Date: 05/01/2017
NYC Development Hub

HUDSON YARDS - RETAIL PODIUM AND TOWER A

500 WEST 33RD STREET
New York, NY

Client
Related Companies
60 Columbus Circle
New York, NY 10023
TEL: 212.801.1000 FAX: 212.801.1048

Oxford Properties Group
320 Park Avenue, 17th Floor
New York, NY 10022
TEL: 212.986.7514 FAX: 212.986.7510

Architect
Kohn Pedersen Fox Associates
11 West 42nd Street
New York, New York 10036
TEL: 212.977.6500 FAX: 212.956.2526

Structural Engineer
Thornton Tomasetti, Inc.
51 Madison Avenue
New York, New York 10010
TEL: 917.661.7800 FAX: 718.661.7801

Mechanical, Electrical, Plumbing, Fire Protection
Jaros Baum & Bolles Consulting Engineers
80 Pine Street
New York, NY 10013
TEL: 212.530.9300 FAX: 212.269.5894

Retail Interior Design & Planning
Elkus-Manfredi
300 A Street
Boston, MA 02210
TEL: 617.426.1300

No.	Description	Date
2	D.O.B. AMENDMENT #2	10/15/2016
1	D.O.B. BUILDING PERMIT FILING	12/10/2014

Key Plan

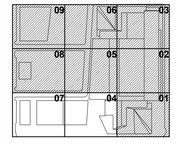

Issue Date: 12/10/2014
Project No. N11328.00
Drawn By: Author
Sheet Number

HYE -TA -S5-2014

Drawing Title

COLUMN SCHEDULE II FLOORS 65-TOP

Drawing Number
S5-2014
S-Scan Drawing Number
S-731.01

© 2013 KOHN PEDERSEN FOX ASSOCIATES PC. All rights reserved.

S5-2014
10/17/2016 4:01:41 PM
COLUMN SCHEDULE II FLOORS 65-TOP
P:\NY\Projects\N11328.00\Drawings\Structural\Record\Issued\2016-10-16 - D.O.B. Amendment No.2\Revit - Rev- Removed\HYTA TYP detail_Col.Schedule.rvt

COLUMN MARK / FLOOR	A-S5/16	F-5/16	F-9/16	G-5/16	H-8/16	K/16	C5/16.1	E5/16.7	A-S5 AB/16.8	C5/16.8	B/17	C.1/17	C.9/17	D.8/17	E.8/17	F.9/17.0	G.6/17	H.8/17	J-S/17.2	A5/17 A.5/17.1	B/17.1	C/17.1	D/17.1	E/17.1	F/17.1	B5/17 B5/17.1	P/1	P/2	P/3	P/4	COLUMN MARK / FLOOR
CROWN																															CROWN
ROOF																															ROOF
68							400 100 0 W14x283 EW		500 100 -200 W14x283 EW	400 100 -100 W14x283 EW										600 200 -100 W14x311 NS	600 400 0 W14x283 NS	700 200 0 W14x283 NS				500 100 -100 W14x283 NS					68
67							500 200 0 W14x283 EW 113'-7"		700 200 -100 W14x283 EW 113'-7"	500 200 -100 W14x283 EW 113'-7"										800 200 0 W14x311 NS 113'-7"	800 500 0 W14x283 NS 113'-7"	900 300 0 W14x283 NS 113'-7"				700 200 0 W14x283 NS 113'-7"					67
66U							1000 300 0 W14x455 EW		900 200 0 W14x370 EW	600 200 0 W14x283 EW										800 200 0 W14x342 NS	1100 500 0 W14x370 NS	1100 400 0 W14x342 NS	200 100 0 W14x283 NS			700 200 0 W14x283 NS					66U
66							1000 300 0 W14x455 EW 111'-4"		900 200 0 W14x370 EW 111'-4"	600 200 0 W14x283 EW 111'-4"										800 200 0 W14x342 NS 111'-4"	1100 500 0 W14x370 NS 111'-4"	1100 400 0 W14x342 NS 111'-4"	200 100 0 W14x283 NS 111'-4"			700 200 0 W14x283 NS 111'-4"					66
65U							1100 400 0 W14x342 EW		1100 300 0 W14x370 EW	600 200 0 W14x283 EW										900 300 0 W14x398 NS	1400 700 0 W14x455 NS	1400 500 0 W14x398 NS	400 200 0 W14x283 NS			800 300 0 W14x283 NS					65U
FLOOR / COLUMN MARK	A-S5/16	F-5/16	F-9/16	G-5/16	H-8/16	K/16	C5/16.1	E5/16.7	A-S5 AB/16.8	C5/16.8	B/17	C.1/17	C.9/17	D.8/17	E.8/17	F.9/17.0	G.6/17	H.8/17	J-S/17.2	A5/17 A.5/17.1	B/17.1	C/17.1	D/17.1	E/17.1	F/17.1	B5/17 B5/17.1	P/1	P/2	P/3	P/4	FLOOR / COLUMN MARK

TYPICAL COLUMN SCHEDULE NOTES:
1. FOR TYPICAL COLUMN SCHEDULE NOTES SEE S5-1001.

TYPICAL COLUMN SCHEDULE BID NOTES:
1. ALL MEMBER SIZES ARE SHOWN TO CONVEY THE APPROXIMATE SIZE ONLY TO ILLUSTRATE THE LEVEL OF COMPLEXITY. SIZES ARE SUBJECT TO CHANGE. DO NOT UTILIZE THESE SIZES FOR TAKE-OFFS. THE TONNAGE MATRIX SHALL BE USED EXCLUSIVELY FOR QUANTITY REVIEW.

Damian Titus
Buildings
APPROVED
Under Directive 2 of 1975
AMENDED APPLICATION
Date: 05/03/2017
NYC Development Hub

0 4' 8' 16'

N

S5-2015
10/17/2016 4:01:43 PM
COLUMN SCHEDULE III FLOORS 65-TOP
P:\NY\Projects\N11328.000\Drawings\Structural\Record\Issued\2016-10-16 - D.O.B. Amendment No.2\Revit - Rev. Removed\HYTA TYP detail_Col Schedule.rvt

BX/PT OF BLOCK/LOT/LIBRO/S Job Number
E50002995/R Scan Code

HUDSON YARDS - RETAIL PODIUM AND TOWER A

500 WEST 33RD STREET
New York, NY

Client
Related Companies
60 Columbus Circle
New York, NY 10023
TEL: 212.801.1000 FAX: 212.801.1048

Oxford Properties Group
320 Park Avenue, 17th Floor
New York, NY 10022
TEL: 212.986.7514 FAX: 212.986.7510

Architect
Kohn Pedersen Fox Associates
11 West 42nd Street
New York, New York 10036
TEL: 212.977.6500 FAX: 212.956.2526

Structural Engineer
Thornton Tomasetti, Inc.
51 Madison Avenue
New York, New York 10010
TEL: 917.661.7800 FAX: 718.661.7801

Mechanical, Electrical, Plumbing, Fire Protection
Jaros Baum & Bolles Consulting Engineers
80 Pine Street
New York, NY 10013
TEL: 212.530.9300 FAX: 212.269.5894

Retail Interior Design & Planning
Elkus-Manfredi
300 A Street
Boston, MA 02210
TEL: 617.426.1300

No.	Description	Date
2	D.O.B. AMENDMENT #2	10/15/2016
1	D.O.B. BUILDING PERMIT FILING	12/10/2014

Key Plan

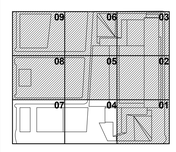

Issue Date: 12/10/2014
Project No. N11328.00
Drawn By Author
Sheet Number

HYE -TA -S5-2015
Drawing Title

COLUMN SCHEDULE III FLOORS 65-TOP

Drawing Number
S5-2015
R-Scan Drawing Number
S-732.01

© 2013 KOHN PEDERSEN FOX ASSOCIATES PC All rights reserved.

SLAB SCHEDULE

SLAB MARK	TOTAL SLAB THICKNESS AND CONCRETE TYPE	STEEL DECK (MIN)	CONCRETE THICKNESS ABOVE FLUTES	f'c	TYPICAL SLAB REINFORCEMENT (SEE S9 SERIES DRAWINGS FOR SUPPLEMENTAL REBAR)	STUD LENGTH	NOTES
S1	5 1/2" NWC	3"-18 GA 40 KSI	2-1/2"	4 ksi	WWF6X6-W2.9X2.9	4 1/2"	
S1A	5 1/2" NWC	3"-18 GA 40 KSI	2-1/2"	4 ksi	#4@12" T EA. WAY	4 1/2"	
S1B	5 1/2" NWC	3"-18 GA 40 KSI	2-1/2"	4 ksi	#4@12" T&B EA. WAY	4 1/2"	
S2	11" NWC	3"-16 GA 40 KSI	8"	5.95 ksi	#4@12" T&B PARALLEL TO SPAN #4@12" T&B PERP TO SPAN	6"	
S3	7 1/2" NWC	3"-18 GA 40 KSI	4 1/2"	4 ksi	#4@12" T&B PARALLEL TO SPAN #4@12" 1 LAYER PERP. TO SPAN	6"	
S3A	7 1/2" NWC	3"-18 GA 40 KSI	4 1/2"	4 ksi	#5@6" T&B PARALLEL TO SPAN #4@12" 1 LAYER PERP. TO SPAN	6"	
S4	7" NWC	3"-18 GA 40 KSI	4"	4 ksi	#4@12" T&B PARALLEL TO SPAN #4@12" 1 LAYER PERP. TO SPAN	4 1/2"	
S5	8" NWC	3"-18 GA 40 KSI	5"	4 ksi	#4@12" T&B PARALLEL TO SPAN #4@12" 1 LAYER PERP. TO SPAN	6"	
S5A	8" NWC	3"-18 GA 40 KSI	5"	5 ksi	#6@6" T&B PARALLEL TO SPAN #4@12" 1 LAYER PERP. TO SPAN	6"	
S6	9 1/2" NWC	3"-18 GA 40 KSI	6 1/2"	5.95 ksi	#6@6" T&B PARALLEL TO SPAN #6@6" 1 LAYER PERP. TO SPAN	6"	
S7	7 1/2" NWC	3"-18 GA 40 KSI	4 1/2"	5.95 ksi	#5@6" T&B PARALLEL TO SPAN #5@6" 1 LAYER PERP. TO SPAN	6"	
S8	4" LWT ON HIGH DENSITY POLYSTYRENE	N/A	4"	4 ksi	WWF4X4-W2.9X2.9	N/A	
S9	5 1/2" LWT	3"-18 GA 40 KSI	2 1/2"	4 ksi	WWF6X6-W2.9X2.9	4 1/2"	SPANNING BETWEEN 8" CMU WALLS @ 8'-0"o.c. SEE TYP DETAIL
S10	12" NWC	N/A	12"	4 ksi	#6@6" T PARALLEL TO SPAN #4@12" B PARALLEL TO SPAN #4@12" T&B PERP TO SPAN	N/A	
S11	7-1/2" STL PLATE SANDWICH W/ LWT CONCRETE	N/A	6-1/4" CONC CORE BTW STL PLTS + SLOPED TOPPING	5.95 ksi	5/8" GR. 50 OUTER STL PLATES T&B WWF6X6-W2.9X2.9	N/A	SPANNING BETWEEN 10" LWT CONCRETE PIERS SEE DETAIL PLATES TO HAVE 3/4"X4" HEADED O.C. EACH WAY, STAGGERED
S12	9" NWC	3"-18 GA 40 KSI	6"	4 ksi	#4@12" T&B PARALLEL TO SPAN #4@12" T&B PERP TO SPAN	6"	
S13	10" NWC	3"-18 GA 40 KSI	7"	4 ksi	#4@12" T&B PARALLEL TO SPAN #4@12" T&B PERP TO SPAN	6"	
S14	5 1/2" NWC	2"-16 GA 40 KSI	3 1/2"	5.95 ksi	#6@12" T PARALLEL TO SPAN #6@12" T PERP TO SPAN	4 1/2"	
S15	7 1/2" NWC	3"-18 GA 40 KSI	4 1/2"	5.95 ksi	#6@12" T PARALLEL TO SPAN #6@12" T PERP TO SPAN	6"	
S16	11" NWC	3"-16 GA 40 KSI	8"	5.95 ksi	#6@12" T&B PARALLEL TO SPAN #6@12" T&B PERP TO SPAN	6"	
S17	6" NWC	3"-18 GA 40 KSI	3"	4 ksi	WWF6X6-W2.9X2.9	4 1/2"	
S18	9" NWC	3"-18 GA 40 KSI	6"	5 ksi	#4@6" T PARALLEL TO SPAN #4@12" B PARALLEL TO SPAN #4@12" T&B PERP TO SPAN	6"	
S19	4 1/2" NWC	2"-18 GA 40 KSI	2-1/2"	4 ksi	WWF6X6-W2.9X2.9	3 1/2"	
S20	17" NWC	N/A	N/A	5.95 ksi	#6@12" T&B PARALLEL TO SPAN #6@12" T&B PERPENDICULAR TO SPAN	6"	
S21	8" NWC	3"-16 GA 40 KSI	5"	5.95 ksi	#4@12" T&B PARALLEL TO SPAN #4@12" 1 LAYER PERP. TO SPAN	6"	
S22	15" NWC	3"-16 GA 40 KSI	12"	5 ksi	#5@8" T&B PARALLEL TO SPAN #5@8" T&B PERPENDICULAR TO SPAN	6"	
S22A	15" NWC	3"-16 GA 40 KSI	12"	5 ksi	#5@12" T&B PARALLEL TO SPAN #5@12" T&B PERPENDICULAR TO SPAN	6"	
S23	9" NWC	3"-18 GA 40 KSI	6"	5 ksi	#6@12" T&B PARALLEL TO SPAN #4@12" T&B PERPENDICULAR TO SPAN	6"	
S24	8 1/2" NWC	3"-18 GA 40 KSI	5-1/2"	4 ksi	#4@12" T&B PARALLEL TO SPAN #4@12" 1 LAYER PERP. TO SPAN	6"	
S25	8" NWC	N/A	8"	5 ksi	#6@12" T PARALLEL TO SPAN #6@8" B PARALLEL TO SPAN #4@12" T&B PERP TO SPAN	N/A	
S26	7 1/2" NWC	3"-18 GA	4-1/2"	5 ksi	#6@12" T&B PARALLEL TO SPAN #4@12" 1 LAYER PERP. TO SPAN	4-1/2"	
S27	5 1/2" LWT	2"-18 GA 40 KSI	3-1/2"	4 ksi	WWF6X6-W2.9X2.9	4-1/2"	
S28	7 1/2" NWC	3"-18 GA 40 KSI	4-1/2"	4 ksi	2 LAYERS WWF6X6-W2.9X2.9	4-1/2"	

1 **SLAB SCHEDULE**
NOT TO SCALE

ROOF DECK SCHEDULE

ROOF DECK MARK	ROOF DECK (MIN)	UNFACTORED DIAPHRAGM SHEAR (PLF)	NOTES
R1	1 1/2"-20 GA TYPE B	SEE GENERAL NOTES	

2 **ROOF DECK SCHEDULE**
NOT TO SCALE

STEEL BAR GRATING SCHEDULE

GRATING MARK	BAR SIZE	BAR SPACING	NOTES
G1	2" X 3/16"	15/16"	TYPE 15-4

3 **STEEL BAR GRATING SCHEDULE**
NOT TO SCALE

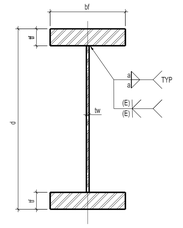

NOTES:
1. SIZE OF WELD a ASSUMES SHIELDED METAL ARC WELDING (SMAW)
2. ALL WELDS ARE CONTINUOUS UON

PLATE GIRDER SCHEDULE

MARK	Fy (ksi)	d (in)	FLANGE bf (in)	FLANGE tf (in)	WEB tw (in)	WELD a (in)	WELD (E) (in)	WELD CJP	NOTES
PG4-1	50	48	24	3	1.5	5/8			
PG5-1	50	60	24	1.5	1	1/2			
PG5-2	50	60	24	2.5	1	9/16			
PG5-3	50	60	24	3.5	2	9/16			
BBW24X24X3.5X2A	50	24	24	3.5	2	5/16			
BBW24X24X5X4B	50	24	24	5	4	3/8			
BBW36X24X4X4B	50	36	24	4	4	3/8			
BBW36X24X6X5H	50	36	24	6	5	3/4			
BBW42X18X5X2.5A	50	42	18	5	2.5	5/16			
BBW42X24X4X3A	50	42	24	4	3	5/16			
BBW42X24X5X3A	50	42	24	5	3	5/16			
BBW42X24X6X3A	50	42	24	6	3	5/16			
BBW42X24X6X3B	50	42	24	6	3	3/8			
BBW42X24X6X3D	50	42	24	6	3	1/2			
BBW42X24X7X3A	50	42	24	7	3	5/16			
BBW42X24X8X3(H)	50	42	24	8	3	0	(3/4)		
BBW42X24X8X3A	50	42	24	8	3	5/16			
BBW42X24X8X3B	50	42	24	8	3	3/8			
BBW42X24X8X3F	50	42	24	8	3	5/8			
BBW42X30X6X4A	50	42	30	6	4	5/16			
BBW42X30X7X4H	50	42	30	7	4	3/4			
BW36X9X1X.5	50	36	9	1	1/2				
BW21X14X2.5X1	50	21	14	2.5	1	3/8			

4 **TYPICAL PLATE GIRDER DETAIL AND SCHEDULE**
NOT TO SCALE

BEAM COPE PENETRATION SCHEDULE

MARK	COPE (IN) WIDTH (w)	COPE (IN) DEPTH (d)	PLATE (IN) THICKNESS (t)	PLATE (IN) WIDTH (bf)	PLATE (IN) L DEVELOPMENT (Ld)	WELD SIZE (WS)	PLATE REINFORCEMENT GRADE TO MATCH GRADE OF BEAM NOTES
C 01	42	9	1	12	12	5/16	
C 02	36	12	1	12	12	5/16	
C 03	96	3	0.525	6	24"	5/16	
C 04	44	10.5	0.65	10	12"	5/16	
C 05	44	8	0.65	10	12"	5/16	
C 06	34	7	1	13	22"	5/16	
C 07	36	6	1	13	22"	5/16	
C 08	52	3	0.6	10	12"	5/16	
C 09	38	7	0.5	13	12"	5/16	
C 10	40	9	0.5	13	12"	5/16	
C 11	50	9	0.5	13	12"	5/16	
C 12	48	8	1	12	20"	5/16	
C 13	36	8.5	0.5	10	12"	5/16	
C 14	60	6	0.75	10	12"	5/16	
C 14A	60	6	1	14	12"	5/16	
C 15	66	7	1	12	12"	5/16	
C 16	72	12	1	12	12"	5/16	
C 17	84	6	1.375	14	12"	5/16	
C 18	110	6	1.25	11.5	70"	5/16	PLATE EXTENDED DUE TO PROXIMITY OF ADJACENT PENETRATION
C 19	36	8	1	10.5	20"	5/16	
C 20	78	18	1	12	20"	5/16	
C 21	96	20	1.75	12	20"	5/16	
C 22	42	9	1.5	16	18"	3/8	
C 23	63.25	10	1	12	20"	5/16	
C 24	63.25	10	1.5	12	26"	3/8	
C 25	61.375	10	1.75	12	26"	3/8	
C 26	61.375	10	2	12	15	5/16	
C 27	63.25	6	1	12	20	5/16	

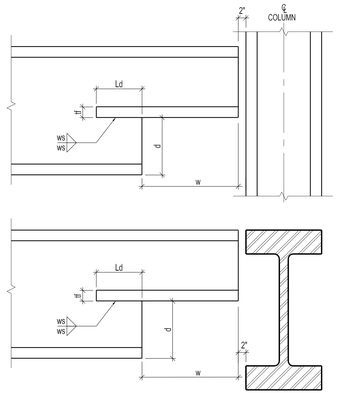

5 **TYPICAL BEAM COPE PENETRATION SCHEDULE**
NOT TO SCALE

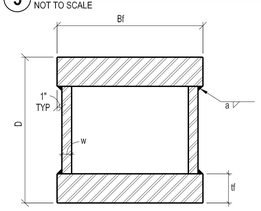

MARK	D	Bf	Tf	Tw	a
BG1	36"	22"	3"	1"	1/2"
BG2	10"	22"	3"	1"	1/2"

NOTES:
1. SIZE OF WELD a ASSUMES SHIELDED METAL ARC WELDING (SMAW)
2. ALL WELDS ARE CONTINUOUS UON
3. PLATE GIRDER DESIGNED FOR THE FOLLOWING PLATE GRADE:

tf, tw < = 4", ASTM A572 Fy = 50 ksi
4" < tf < = 6", ASTM A572 Fy = 42 ksi
6" < tf < = 8", ASTM A36 Fy = 36 ksi

6 **TYPICAL BOXGIRDER DETAIL AND SCHEDULE**
NOT TO SCALE

HUDSON YARDS - RETAIL PODIUM AND TOWER A

500 WEST 33RD STREET
New York, NY

Client
Related Companies
60 Columbus Circle
New York, NY 10023
TEL: 212.801.1000 FAX: 212.801.1048

Oxford Properties Group
320 Park Avenue, 17th Floor
New York, NY 10022
TEL: 212.986.7514 FAX: 212.986.7510

Architect
Kohn Pedersen Fox Associates
11 West 42nd Street
New York, New York 10036
TEL: 212.977.6500 FAX: 212.956.2526

Structural Engineer
Thornton Tomasetti, Inc.
51 Madison Avenue
New York, New York 10010
TEL: 917.661.7800 FAX: 718.661.7801

Mechanical, Electrical, Plumbing, Fire Protection
Jaros Baum & Bolles Consulting Engineers
80 Pine Street
New York, NY 10013
TEL: 212.530.9300 FAX: 212.269.5894

Retail Interior Design & Planning
Elkus-Manfredi
300 A Street
Boston, MA 02210
TEL: 617.426.1300

No.	Description	Date
2	D.O.B AMENDMENT #2	10/15/2016
1	D.O.B BUILDING PERMIT FILING	12/10/2014

Key Plan

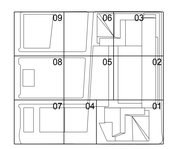

Issue Date 12/10/2016
Project No. N11328.00
Drawn By
Sheet Number

Damian Titus
Buildings
APPROVED
Under Directive 2 of 1975
AMENDED APPLICATION
Date: 05/03/2017
NYC Development Hub

HYE-TA-S5-3001
Drawing Title

SCHEDULES

Drawing Number
S5-3001
N-Scan Drawing Number
S-750.01

© 2013 KOHN PEDERSEN FOX ASSOCIATES PC. All rights reserved.

US SHAPE	SUBSTITUTION TYPE	SUBS SIZE SEQ 5 (LEVELS 11-22)	SUBS SIZE SEQ 7 (LEVELS 41-51)	NOTES
W44X335	BW	BW44X335	BW44X335	1
W44X290	BW	BW44X290	BW44X290	
W44X262	BW	BW44X262	BW44X262	1
W44X230	BW	BW44X230	BW44X230	1
W40X593	BW	BW40X593	BW40X593	1
W40X503	BW	BW40X503	BW40X503	1
W40X431	BW	BW40X431	BW40X431	1
W40X397	BW	BW40X397	BW40X397	1
W40X372	BW	BW40X372	BW40X372	1
W40X362	BW	BW40X362	BW40X362	1
W40X324	BW	BW40X324	BW40X324	
W40X297	BW	BW40X297	BW40X297	
W40X277	BW	BW40X277	BW40X277	1
W40X249	BW	BW40X249	BW40X249	
W40X215	BW	BW40X215	BW40X215	1
W40X199	BW	BW40X199	BW40X199	1
W40X392	BW	BW40X392	BW40X392	1
W40X331	BW	BW40X331	BW40X331	1
W40X327	BW	BW40X327	BW40X327	1
W40X294	BW	BW40X294	BW40X294	
W40X278	BW	BW40X278	BW40X278	1
W40X264	BW	BW40X264	BW40X264	1
W40X235	BW	BW40X235	BW40X235	
W40X211	BW	BW40X211	BW40X211	
W40X183	BW	BW40X183	BW40X183	
W40X167	BW	BW40X167	BW40X167	
W40X149	BW	BW40X149	BW40X149	
W36X800	BW	BW36X800	BW36X800	
W36X652	BW	BW36X652	BW36X652	1
W36X529	BW	BW36X529	BW36X529	
W36X487	BW	BW36X487	BW36X487	
W36X441	BW	BW36X441	BW36X441	
W36X395	BW	BW36X395	BW36X395	
W36X361	BW	BW36X361	BW36X361	
W36X330	BW	BW36X330	BW36X330	
W36X302	BW	BW36X302	BW36X302	
W36X282	BW	BW36X282	BW36X282	1
W36X262	BW	BW36X262	BW36X262	
W36X247	BW	BW36X247	BW36X247	
W36X231	BW	BW36X231	BW36X231	
W36X256	BW	BW36X256	BW36X256	
W36X232	BW	BW36X232	BW36X232	1
W36X210	BW	BW36X210	BW36X210	
W36X194	BW	BW36X194	BW36X194	
W36X182	BW	BW36X182	BW36X182	
W36X170	BW	BW36X170	BW36X170	
W36X160	BW	BW36X160	BW36X160	
W36X150	BW	BW36X150	BW36X150	
W36X135	NO SUBS	W36X135	W36X135	
W33X387	BW	BW33X387	BW33X387	
W33X354	BW	BW33X354	BW33X354	
W33X318	BW	BW33X318	BW33X318	1
W33X291	BW	BW33X291	BW33X291	1
W33X263	BW	BW33X263	BW33X263	
W33X241	BW	BW33X241	BW33X241	
W33X221	BW	BW33X221	BW33X221	
W33X201	BW	BW33X201	BW33X201	
W33X169	BW	BW33X169	BW33X169	1
W33X152	BW	BW33X152	BW33X152	1
W33X141	BW	BW33X141	BW33X141	
W33X130	NO SUBS	W33X130	W33X130	
W33X118	NO SUBS-BW	W33X118	BW33X118	
W30X391	BW	BW30X391	BW30X391	1
W30X357	BW	BW30X357	BW30X357	1
W30X326	BW	BW30X326	BW30X326	1
W30X292	BW	BW30X292	BW30X292	1
W30X261	BW	BW30X261	BW30X261	1
W30X235	BW	BW30X235	BW30X235	1
W30X211	BW	BW30X211	BW30X211	1
W30X191	BW	BW30X191	BW30X191	1
W30X173	BW	BW30X173	BW30X173	1
W30X148	BW	BW30X148	BW30X148	1
W30X132	BW	BW30X132	BW30X132	
W30X124	BW	BW30X124	BW30X124	
W30X116	BW	BW30X116	BW30X116	
W30X108	BW	BW30X108	BW30X108	
W30X99	NO SUBS	W30X99	W30X99	

US SHAPE	SUBSTITUTION TYPE	SUBS SIZE SEQ 5 (LEVELS 11-22)	SUBS SIZE SEQ 7 (LEVELS 41-51)	NOTES
W30X90	NO SUBS	W30X90	W30X90	
W27X539	BW	BW27X539	BW27X539	1
W27X368	BW	BW27X368	BW27X368	1
W27X336	BW	BW27X336	BW27X336	1
W27X307	BW	BW27X307	BW27X307	1
W27X281	BW	BW27X281	BW27X281	1
W27X258	BW	BW27X258	BW27X258	1
W27X235	BW	BW27X235	BW27X235	1
W27X217	BW	BW27X217	BW27X217	1
W27X194	BW	BW27X194	BW27X194	1
W27X178	BW	BW27X178	BW27X178	1
W27X161	BW	BW27X161	BW27X161	
W27X146	BW	BW27X146	BW27X146	
W27X129	BW	BW27X129	BW27X129	
W27X114	NO SUBS	W27X114	W27X114	
W27X102	BW	BW27X102	BW27X102	
W27X94	BW	BW27X94	BW27X94	
W27X84	NO SUBS	W27X84	W27X84	
W24X370	BW	BW24X370	BW24X370	
W24X335	BW	BW24X335	BW24X335	
W24X306	BW	BW24X306	BW24X306	1
W24X279	BW	BW24X279	BW24X279	
W24X250	BW	BW24X250	BW24X250	1
W24X229	BW	BW24X229	BW24X229	
W24X207	BW	BW24X207	BW24X207	
W24X192	BW	BW24X192	BW24X192	
W24X176	BW	BW24X176	BW24X176	
W24X162	BW	BW24X162	BW24X162	
W24X146	BW	BW24X146	BW24X146	
W24X131	BW	BW24X131	BW24X131	
W24X117	BW	BW24X117	BW24X117	
W24X104	HE	HE600A	HE600A	
W24X103	BW	BW24X103	BW24X103	
W24X94	BW	BW24X94	BW24X94	
W24X84	BW	BW24X84	BW24X84	
W24X76	IPE	IPE600	IPE600	
W24X68	IPE	IPEA600	IPEA600	
W24X62	IPE	IPE550	IPE550	
W24X55	NO SUBS	W24X55	W24X55	
W21X201	BW	BW21X201	BW21X201	1
W21X182	BW	BW21X182	BW21X182	1
W21X166	BW	BW21X166	BW21X166	1
W21X147	BW	BW21X147	BW21X147	1
W21X132	BW	BW21X132	BW21X132	1
W21X122	HE	HE550B	HE550B	
W21X111	HE	HE550B	HE550B	
W21X101	HE	HE550A	HE550A	
W21X93	N/A-BW	TBD	BW21X93	
W21X83	N/A-BW	TBD	BW21X83	
W21X73	N/A-BW	TBD	BW21X73	
W21X68	IPE	IPE550	IPE550	
W21X62	IPE	IPE550	IPE550	
W21X55	IPE	IPE500	IPE500	
W21X48	IPE	IPEA500	IPEA500	
W21X50	IPE	IPEA500	IPEA500	
W21X44	NO SUBS	W21X44	W21X44	
W18X311	BW	BW18X311	BW18X311	1
W18X283	BW	BW18X283	BW18X283	1
W18X258	BW	BW18X258	BW18X258	1
W18X234	BW	BW18X234	BW18X234	1
W18X211	BW	BW18X211	BW18X211	1
W18X192	BW	BW18X192	BW18X192	1
W18X175	BW	BW18X175	BW18X175	1
W18X158	BW	BW18X158	BW18X158	1
W18X143	BW	BW18X143	BW18X143	1
W18X130	BW	BW18X130	BW18X130	1
W18X119	HE	HE500B	HE500B	
W18X106	HE	HE450B	HE450B	
W18X97	HE	HE450B	HE450B	
W18X86	HE	HE450A	HE450A	
W18X76	HE	HE450A	HE450A	
W18X71	N/A	TBD	TBD	2
W18X65	NO SUBS	W18X65	W18X65	
W18X60	IPE-N/A	IPE500	TBD	2
W18X55	IPE-N/A	IPE500	BW18X55	
W18X50	IPE	IPE450	IPE450	
W18X46	IPE	IPE450	IPE450	

US SHAPE	SUBSTITUTION TYPE	SUBS SIZE SEQ 5 (LEVELS 11-22)	SUBS SIZE SEQ 7 (LEVELS 41-51)	NOTES
W18X40	IPE	IPEA450	IPEA450	
W18X35	NO SUBS	W18X35	W18X35	
W16X100	HE	HE450B	HE450B	
W16X89	HE	HE400B	HE400B	
BW16X77	N/A-BW	TBD	BW16X77	
W16X67	N/A	TBD	TBD	2
BW16X57	N/A-BW	TBD	BW16X57	
W16X50	IPE	IPE450	IPE450	
W16X45	IPE	IPE450	IPE450	
W16X40	IPE	IPE400	IPE400	
W16X36	IPE	IPE400	IPE400	
W16X31	NO SUBS-BW	W16X31	BW16X31	
W16X26	NO SUBS	W16X26	W16X26	
W14X730+1"PL	BW	W14X730+1"PL	W14X730+1"PL	1
W14X730	BW	BW14X730	BW14X730	
W14X665	BW	BW14X665	BW14X665	
W14X605	BW	BW14X605	BW14X605	
W14X550	BW	BW14X550	BW14X550	
W14X500	BW	BW14X500	BW14X500	
W14X455	BW	BW14X455	BW14X455	
W14X426	BW	BW14X426	BW14X426	
W14X398	BW	BW14X398	BW14X398	
W14X370	BW	BW14X370	BW14X370	
W14X342	BW	BW14X342	BW14X342	
W14X311	BW	BW14X311	BW14X311	
W14X283	BW	BW14X283	BW14X283	
W14X257	BW	BW14X257	BW14X257	
W14X233	BW	BW14X233	BW14X233	
W14X211	BW	BW14X211	BW14X211	
W14X193	NO SUBS	W14X193	W14X193	
W14X176	BW	BW14X176	BW14X176	
W14X159	BW	BW14X159	BW14X159	
W14X145	NO SUBS	W14X145	W14X145	
W14X132	NO SUBS	W14X132	W14X132	
W14X120	NO SUBS	W14X120	W14X120	
W14X109	NO SUBS	W14X109	W14X109	
W14X99	NO SUBS-BW	W14X99	BW14X99	
W14X90	W-BW	W14X99	BW14X90	1
W14X82	HE	HE360B	HE360B	
W14X74	HE	HE360A	HE360A	
W14X68	HE	HE360A	HE360A	
W14X61	HE	HE360A	HE360A	
W14X53	N/A	TBD	TBD	2
W14X48	N/A-BW	TBD	BW14X48	
W14X43	N/A-BW	TBD	BW14X43	
W14X38	N/A	TBD	TBD	2
W14X34	N/A-IPE	TBD	IPE360A	
W14X30	IPE	IPE360	IPE360	
W14X26	IPE	IPE330	IPE330	
W14X22	IPE	IPE300	IPE300	
W12X336	BW	BW12X336	BW12X336	1
W12X305	BW	BW12X305	BW12X305	1
W12X279	BW	BW12X279	BW12X279	1
W12X252	BW	BW12X252	BW12X252	1
W12X230	BW	BW12X230	BW12X230	1
W12X210	BW	BW12X210	BW12X210	1
W12X190	BW	BW12X190	BW12X190	1
W12X170	BW	BW12X170	BW12X170	1
W12X152	BW	BW12X152	BW12X152	1
W12X136	BW	BW12X136	BW12X136	1
W12X120	N/A	N/A	W12X120	
W12X106	N/A	N/A	W12X106	
W12X96	N/A	N/A	W12X96	
W12X79	N/A-HE	TBD	HE320B	
W12X58	HE-N/A	HE320A	TBD	2
W12X50	N/A	TBD	TBD	2
W12X45	N/A	TBD	TBD	2
W12X40	N/A-BW	TBD	BW12X40	
W12X26	IPE	IPE360	IPE360	
W12X22	IPE-N/A	IPE270	TBD	2
W12X19	NO SUBS	W12X19	W12X19	
W12X16	IPE	IPE270	IPE270	
W12X14	IPE	IPE270	IPE270	
W10X33	N/A	TBD	TBD	2
W10X30	IPE-N/A	IPE330	TBD	2
W10X19	IPE	IPE270	IPE270	
W10X12	IPE	IPE270	IPE270	
W8X13	IPE	IPE270	IPE270	
W8X10	IPE	IPE270	IPE270	

NOTES:

1. FOR PROFILES INDICATED AS NOTE 1, THE BUILT-UP SHAPE IS PROPOSED BY TT BASED ON INFORMATION RECEIVED BY CIMOLAI. CIMOLAI TO REVIEW.
2. FOR PROFILES INDICATED AS NOTE 2, SUBSTITUTION PROPOSED BY CIMOLAI IS NOT APPROVED. TT IS PROCEEDING WITH AISC SHAPES FOR THESE PROFILES. CIMOLAI TO REVIEW FOR SUBSTITUTION OPTIONS AFTER RELEASE FOR MILL ORDER.
3. THE SUBSTITUTIONS APPLY TO LEVELS 11-22 AND LEVEL 40 TO TOP OF BUILDING.
4. REFER TO BUILT-UP WIDE FLANGE (BW) SECTION SCHEDULE FOR DETAILS ON BW SECTIONS
5. ANY REQUESTED MODIFICATIONS TO THIS SUBSTITUTION TABLE SHALL BE SUBMITTED BY CIMOLAI FOR REVIEW AND APPROVAL.

1 W-SHAPE SUBSTITUTION SCHEDULE
NOT TO SCALE

US SHAPE	SUBSTITUTION TYPE	SUBS SIZE SEQ 5 (LEVELS 11-22)	SUBS SIZE SEQ 7 (LEVELS 41-51)	NOTES
HSS12X12X3/8	SHS	300X300X10	300X300X10	
HSS14X14X3/8	SHS	350X350X10	350X350X10	
HSS16X16X1/2	SHS	400X400X12.5	400X400X12.5	
HSS16X16X3/8	SHS	400X400X10	400X400X10	
HSS16X16X5/8	SHS	400X400X16	400X400X16	
HSS20X12X5/8	RHS	500X300X16	500X300X16	
HSS8X8X3/8	SHS	200X200X10	200X200X10	
HSS9X9X3/8	SHS	220X220X10	220X220X10	

2 HSS SHAPE SUBSTITUTION SCHEDULE
NOT TO SCALE

FOR BW SECTION PROPERTIES AND WELDS, SEE SHEET S3-5004

DEPT OF BLDGS 121186251 Job Number
ES916820602 Scan Code

HUDSON YARDS - RETAIL PODIUM AND TOWER A
500 WEST 33RD STREET
New York, NY

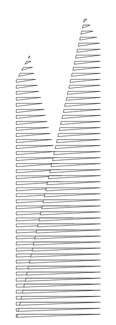

Client
Related Companies
60 Columbus Circle
New York, NY 10023
TEL: 212.801.1000 FAX: 212.801.1048

Oxford Properties Group
320 Park Avenue, 17th Floor
New York, NY 10022
TEL: 212.986.7514 FAX: 212.986.7510

Architect
Kohn Pedersen Fox Associates
11 West 42nd Street
New York, New York 10036
TEL: 212.977.6500 FAX: 212.956.2526

Structural Engineer
Thornton Tomasetti, Inc.
51 Madison Avenue
New York, New York 10010
TEL: 917.661.7800 FAX: 718.661.7801

Mechanical, Electrical, Plumbing, Fire Protection
Jaros Baum & Bolles Consulting Engineers
80 Pine Street
New York, NY 10013
TEL: 212.530.9300 FAX: 212.269.5894

Retail Interior Design & Planning
Elkus-Manfredi
300 A Street
Boston, MA 02210
TEL: 617.426.1300

No.	Description	Date
1	D.O.B AMENDMENT #2	10/15/2016

Key Plan

09 06 03
08 05 02
07 04 01

Damian Titus
Buildings
APPROVED
Under Directive 2 of 1975
AMENDED APPLICATION
Date: 05/03/2017
NYC Development Hub

Issue Date 10/15/2016
Project No. N11328.00
Drawn By
Sheet Number

STATE OF NEW YORK
MICHAEL J. SQUARZINI
LICENSED PROFESSIONAL ENGINEER
No. 080640

HYE-TA-S5-3003
Drawing Title

W SHAPE SUBSTITUTION SCHEDULES

Drawing Number
S5-3003
B-Scan Drawing Number
S-752.00
SHEET 370 OF 443

© 2013 KOHN PEDERSEN FOX ASSOCIATES PC. All rights reserved.

SHAPE ID	h [mm]	b [mm]	tw [mm]	tf [mm]	WELD TYPE	z (LEG) (IMPERIAL SIZE) in	a (EFF. THROAT) (IMPERIAL SIZE) in	z (LEG) (CIM size) mm	a min (EFF. THROAT) (CIM size) mm
BW12X40	302	203	11.938	13.843	FILLET	3/8		9	
BW12X136	340	315	20.320	32.766	FILLET	5/8		16	
BW12X152	348	318	22.225	35.814	FILLET	5/8		16	
BW12X170	356	320	24.384	39.624	FILLET	3/4		19	
BW12X190	366	323	27.178	44.958	FILLET			20	
BW12X210	373	325	29.972	51.308	FILLET	7/8		22	
BW12X230	384	328	32.766	53.086	FILLET	1		25	
BW12X252	391	330	35.814	57.912	FILLET	1		26	
BW12X279	404	333	39.116	62.992	PJP		7/8		20
BW12X305	414	335	42.672	72.390	PJP		7/8		22
BW12X336	427	340	45.974	77.216	PJP		1		23
BW14X43	348	203	11.938	13.843	FILLET	3/8		9	
BW14X48	351	204	11.938	15.367	FILLET	3/8		9	
BW14X90	356	369	11.938	18.923	FILLET	3/8		9	
BW14X99	361	371	12.446	20.320	FILLET	3/8		9	
BW14X159	381	396	18.923	30.226	FILLET	5/8		15	
BW14X176	386	399	21.336	33.274	FILLET	5/8		16	
BW14X211	399	401	24.892	39.624	FILLET	3/4		19	
BW14X233	406	404	27.178	43.688	FILLET	7/8		20	
BW14X257	417	406	29.972	48.006	FILLET	7/8		22	
BW14X283	424	409	32.766	53.086	FILLET	1		25	
BW14X311	434	411	35.814	57.912	FILLET	1		26	
BW14X342	445	417	39.116	62.992	PJP		7/8		20
BW14X370	455	419	42.672	67.564	PJP		7/8		22
BW14X398	465	422	44.958	72.390	PJP		1		23
BW14X426	475	424	48.006	77.216	PJP		1		25
BW14X455	483	427	51.308	81.534	PJP		1-1/8		26
BW14X500	498	432	55.880	88.900	PJP		1-1/8		28
BW14X550	513	437	60.452	97.028	PJP		1-1/4		31
BW14X605	531	442	66.040	105.664	PJP				33
BW14X665	549	450	72.390	114.808	PJP		1-1/2		37
BW14X730+1"PL	620	455	77.978	150.114	PJP		1-3/4		39
BW14X730	569	455	77.978	124.714	PJP		1-3/4		39
BW16X31	404	140	11.938	11.938	FILLET	3/8		9	
BW16X57	417	181	11.938	18.923	FILLET	3/8		9	
BW16X77	419	262	11.938	19.558	FILLET	3/8		9	
BW18X130	490	284	17.907	30.990	FILLET	1/2		13	
BW18X143	495	284	18.923	34.544	FILLET	5/8		15	
BW18X158	500	287	21.336	36.576	FILLET	5/8		16	
BW18X175	508	290	23.876	40.894	FILLET	3/4		17	
BW18X192	518	292	24.384	44.958	FILLET	3/4		19	
BW18X211	526	295	27.178	51.308	FILLET	7/8		20	
BW18X234	536	297	29.972	57.912	FILLET	7/8		22	
BW18X258	546	300	32.766	60.452	FILLET	1		25	
BW18X283	556	302	35.814	66.040	FILLET	1		26	
BW18X311	566	305	39.116	72.390	PJP		7/8		20
BW21X73	538	211	11.938	18.923	FILLET	3/8		9	
BW21X83	544	212	13.843	21.336	FILLET	1/2		10	
BW21X93	549	214	14.732	23.876	FILLET	1/2		11	
BW21X132	554	315	16.764	27.178	FILLET	1/2		13	
BW21X147	561	318	18.923	29.972	FILLET	5/8		15	
BW21X166	572	315	19.558	34.544	FILLET	5/8		15	
BW21X182	577	318	21.336	38.100	FILLET	5/8		16	
BW21X201	584	320	23.876	42.672	FILLET	3/4		17	
BW24X103	622	229	14.732	24.892	FILLET	7/16		12	
BW24X117	617	325	14.732	21.590	FILLET	7/16		12	
BW24X131	622	328	15.367	24.384	FILLET	7/16		12	
BW24X146	627	328	16.764	27.940	FILLET	1/2		13	
BW24X162	635	330	17.907	30.998	FILLET	1/2		13	
BW24X176	640	328	19.558	34.544	FILLET	5/8		15	
BW24X192	648	330	21.336	38.100	FILLET	5/8		16	
BW24X207	653	330	22.225	39.878	FILLET	5/8		16	
BW24X229	660	333	24.384	43.942	FILLET	3/4		19	
BW24X250	668	335	27.178	48.006	FILLET	7/8		20	
BW24X279	678	338	29.972	53.086	FILLET	7/8		22	
BW24X306	688	340	32.766	57.912	FILLET	1		25	
BW24X335	699	343	35.814	62.992	FILLET	1		26	
BW24X370	711	348	39.116	72.390	PJP		7/8		20
BW24X84	612	229	11.938	19.558	FILLET	3/8		9	
BW24X94	617	230	13.843	22.225	FILLET	7/16		10	
BW27X102	688	254	13.843	21.336	FILLET	7/16		10	
BW27X129	701	254	15.875	27.940	FILLET	1/2		12	
BW27X146	696	356	15.367	24.765	FILLET	7/16		12	
BW27X161	701	356	16.764	27.432	FILLET	1/2		13	
BW27X178	706	358	18.923	30.226	FILLET	5/8		15	
BW27X194	714	356	19.558	34.544	FILLET	5/8		15	
BW27X217	721	358	21.336	38.100	FILLET	5/8		16	
BW27X235	729	361	23.876	40.894	FILLET	3/4		17	
BW27X258	737	363	25.400	44.958	FILLET	3/4		19	
BW27X281	744	366	27.178	51.308	FILLET	7/8		20	
BW27X307	752	366	29.972	53.086	FILLET	7/8		22	

SHAPE ID	h [mm]	b [mm]	tw [mm]	tf [mm]	WELD TYPE	z (LEG) (IMPERIAL SIZE) in	a (EFF. THROAT) (IMPERIAL SIZE) in	z (LEG) (CIM size) mm	a min (EFF. THROAT) (CIM size) mm
BW27X336	762	371	32.766	57.912	FILLET	1		27	
BW27X368	772	373	35.814	62.992	FILLET	1		26	
BW27X539	826	389	51.308	97.028	PJP		1-1/8		26
BW27X94	683	254	12.446	18.923	FILLET	3/8		10	
BW30X108	757	267	13.843	19.558	FILLET	7/16		10	
BW30X116	762	267	14.732	21.590	FILLET	7/16		12	
BW30X124	767	267	15.367	23.876	FILLET	7/16		12	
BW30X132	770	267	15.875	25.908	FILLET	1/2		12	
BW30X148	780	267	16.764	29.972	FILLET	1/2		13	
BW30X173	772	381	16.764	27.178	FILLET	1/2		13	
BW30X191	780	381	18.923	30.226	FILLET	5/8		15	
BW30X211	785	384	20.320	34.544	FILLET	5/8		16	
BW30X235	795	384	21.336	38.100	FILLET	5/8		16	
BW30X261	803	386	23.876	42.672	FILLET	3/4		17	
BW30X292	813	389	25.910	46.990	FILLET	3/4		19	
BW30X326	823	391	29.972	53.086	FILLET	7/8		22	
BW30X357	833	394	32.766	57.912	FILLET	1		25	
BW30X391	843	396	34.544	61.976	FILLET	1		26	
BW33X118	836	292	14.732	18.923	FILLET	7/16		11	
BW33X130	841	292	14.732	21.717	FILLET	7/16		12	
BW33X141	846	292	15.367	24.384	FILLET	7/16		12	
BW33X152	851	295	16.764	27.178	FILLET	1/2		13	
BW33X169	859	292	17.907	30.990	FILLET	1/2		13	
BW33X201	856	399	18.923	29.972	FILLET	5/8		15	
BW33X221	861	401	20.320	32.766	FILLET	5/8		16	
BW33X241	869	404	21.336	35.814	FILLET	5/8		16	
BW33X263	876	401	22.225	39.878	FILLET	5/8		16	
BW33X291	884	404	24.384	43.942	FILLET	3/4		19	
BW33X318	894	406	27.178	48.006	FILLET	7/8		20	
BW33X354	904	409	29.972	53.086	FILLET	7/8		22	
BW33X387	914	411	32.766	57.912	FILLET	1		25	
BW36X150	912	305	15.875	23.876	FILLET	1/2		12	
BW36X160	914	305	16.764	25.908	FILLET	1/2		13	
BW36X170	919	305	17.907	27.940	FILLET	1/2		13	
BW36X182	922	307	18.923	29.972	FILLET	5/8		15	
BW36X194	927	307	19.558	32.766	FILLET	5/8		15	
BW36X210	932	310	21.336	34.544	FILLET	5/8		16	
BW36X231	927	419	19.558	32.766	FILLET	5/8		15	
BW36X232	942	307	22.225	39.878	FILLET	5/8		16	
BW36X247	932	419	20.320	34.544	FILLET	5/8		16	
BW36X256	950	310	24.384	43.942	FILLET	3/4		19	
BW36X262	937	422	21.336	36.576	FILLET	5/8		16	
BW36x262-ALT	937	422	30.990	36.576	FILLET	7/8		22	
BW36X282	942	422	22.479	39.878	FILLET	3/4		17	12
BW36X302	947	424	24.003	42.672	FILLET	3/4		19	13
BW36X330	958	422	25.908	46.990	FILLET	3/4		19	13
BW36X361	965	424	28.448	51.308	FILLET	7/8		22	15
BW36X395	975	427	30.998	55.880	FILLET	7/8		23	16
BW36X441	988	432	34.544	61.976	FILLET	1		26	18
BW36X487	998	434	38.100	68.072	PJP		7/8		19
BW36X529	1011	437	40.894	73.914	PJP		7/8		21
BW36X652	1044	447	51.308	97.028	PJP		1-1/8		26
BW36X800	1082	457	57.912	108.966	PJP		1-1/4		29
BW40X149	970	300	16.764	21.336	FILLET	1/2		13	9
BW40X167	980	300	16.764	27.178	FILLET	1/2		13	9
BW40X183	991	300	16.764	30.998	FILLET	1/2		13	9
BW40X199	983	401	16.764	27.178	FILLET	1/2		13	9
BW40X211	1001	300	19.558	36.576	FILLET	5/8		15	10
BW40X215	991	401	16.764	30.990	FILLET	1/2		13	9
BW40X235	1008	302	21.336	40.894	FILLET	5/8		16	11
BW40X249	1001	401	19.558	36.576	FILLET	5/8		15	10
BW40X264	1016	302	24.384	43.942	FILLET	3/4		19	13
BW40X277	1008	401	21.336	40.894	FILLET	5/8		16	11
BW40X278	1021	305	27.178	45.974	FILLET	7/8		20	14
BW40X294	1026	305	27.178	51.308	FILLET	7/8		20	14
BW40X297	1011	401	23.876	42.672	FILLET	3/4		17	12
BW40X324	1021	404	25.908	45.974	FILLET	3/4		19	13
BW40X327	1036	307	29.972	55.880	FILLET	7/8		22	15
BW40X331	1036	310	30.990	55.880	FILLET	7/8		23	16
BW40X362	1031	406	28.448	51.308	FILLET	7/8		22	15
BW40X372	1031	409	29.972	53.086	FILLET	7/8		22	15
BW40X392	1057	315	36.576	66.040	PJP		3/4		19
BW40X397	1041	409	30.990	55.880	FILLET	7/8		23	16
BW40X431	1049	411	34.544	60.452	FILLET	1		26	18
BW40X503	1069	417	39.116	72.390	PJP		7/8		20
BW40X593	1092	424	45.974	88.900	PJP		1		23
BW44X230	1090	401	18.923	30.990	FILLET	5/8		15	10
BW44X262	1100	401	20.320	36.576	FILLET	5/8		16	11
BW44X290	1107	401	22.225	40.894	FILLET	5/8		16	11
BW44X335	1118	404	27.178	44.958	FILLET	7/8		20	14

1 PROPERTIES OF BUILT-UP SECTIONS
NOT TO SCALE

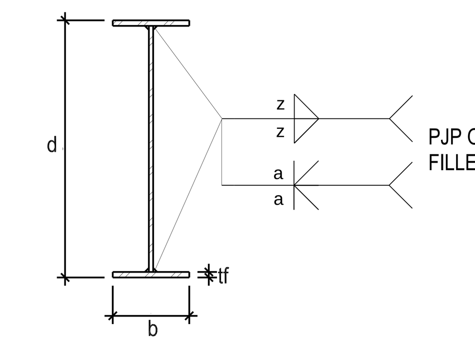

2 BW BUILT-UP SECTIONS
NOT TO SCALE

DEPT OF BLDGS 121186251 Job Number
ES189940553 Scan Code

HUDSON YARDS - RETAIL PODIUM AND TOWER A
500 WEST 33RD STREET
New York, NY

Client
Related Companies
60 Columbus Circle
New York, NY 10023
TEL: 212.801.1000 FAX: 212.801.1048

Oxford Properties Group
320 Park Avenue, 17th Floor
New York, NY 10022
TEL: 212.986.7514 FAX: 212.986.7510

Architect
Kohn Pedersen Fox Associates
11 West 42nd Street
New York, New York 10036
TEL: 212.977.6500 FAX: 212.956.2526

Structural Engineer
Thornton Tomasetti, Inc.
51 Madison Avenue
New York, New York 10010
TEL: 917.661.7800 FAX: 718.661.7801

Mechanical, Electrical, Plumbing, Fire Protection
Jaros Baum & Bolles Consulting Engineers
80 Pine Street
New York, NY 10013
TEL: 212.530.9300 FAX: 212.269.5894

Retail Interior Design & Planning
Elkus-Manfredi
300 A Street
Boston, MA 02210
TEL: 617.426.1300

No.	Description	Date
1	D.O.B AMENDMENT #2	10/15/2016

Key Plan

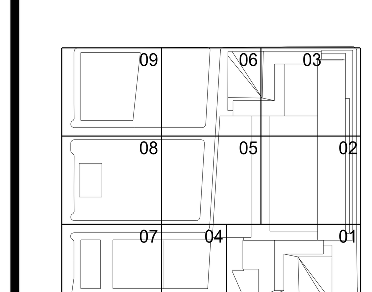

Damian Titus
Buildings
APPROVED
Under Directive 2 of 1975
AMENDED APPLICATION
Date: 05/03/2017
NYC Development Hub

Issue Date 10/15/2016
Project No. N11328.00
Drawn By
Sheet Number

STATE OF NEW YORK MICHAEL J. SQUARZINI LICENSED PROFESSIONAL ENGINEER

HYE-TA-S5-3004
Drawing Title

BW SHAPE PROPERTIES

Drawing Number
S5-3004
B-Scan Drawing Number
S-753.00

© 2013 KOHN PEDERSEN FOX ASSOCIATES PC. All rights reserved.

BEAM REINFORCEMENT SCHEDULE						
Reinf. Type	Plate width (in)	Plate thickness (in)	WT Section	Reinf. Length (ft)	Weld	NOTES
PL1	9	0.75	-	20	TYP	
PL2	7.5	0.75	-	20	TYP	
WT3	-	-	WT6x29	20	TYP	
WT4	-	-	WT5x44	20	TYP	
PL5	12	0.5	-	20	TYP	
PL6	15	1.25	-	20	3/8 - 6" @ 12	
PL7	13	1	-	20	5/16 - 5" @ 12	
WT8	-	-	WT12x81	20	7/16 - 6" @ 12	
PL9	12	0.75	-	14.25	5/16 - 5" @ 12	
PL10	12	0.75	-	26	TYP	
PL11	9	0.5	-	10	TYP	
PL12	17	0.5	-	40	TYP	
PL13	11	0.75	-	32	TYP	
PL14	11	0.75	-	45	TYP	
PL15	11	0.75	-	32	TYP	
PL16	11	0.75	-	14.5	TYP	
WT17	-	-	WT8X50	25	TYP	
WT18	-	-	WT12X88	40	5/16 - 6" @ 12	
PL19	13	0.75	-	32	TYP	
PL21	8	0.5	-	20	TYP	
WT22	-	-	WT4X33.5	20	TYP	
WT23	-	-	WT6X60	20	5/16 - 6" @ 12	
PL24	12	0.75	-	40	TYP	
PL25	15	2	-	50	TYP	
PL20	17.75	1	-	20	5/16 - 6" @ 12	
PL26	11	0.75	-	44	TYP	
PL27	11	0.75	-	32	TYP	
PL28	13	0.75	-	30	TYP	
PL29	18	0.75	-	50	TYP	
PL30	13	1	-	50	TYP	
PL31	14	1.25	-	50	TYP	
PL32	9	0.5	-	20	TYP	
WT33	-	-	WT5X30	20	TYP	
WT34	-	-	WT5X19.5	20	TYP	
PL35	8	0.75	-	30	TYP	
PL36	8.5	0.5	-	50	TYP	
PL37	12.5	0.75	-	50	TYP	

NOTES:
1. SEE STRUCTURAL DRAWINGS FOR QUANTITY AND LOCATIONS OF REINFORCEMENT.
2. WELD REINFORCEMENT PLATES AND WT SECTIONS PER S/S4-2002 UON.
3. 24" CONTINUOUS WELDS EA. SIDE AT ENDS OF WT SECTIONS AND PLATES.
4. BOTTOM FLANGE REINFORCEMENT TO BE CENTERED ON LENGTH OF BEAM.

1 TENANT RETROFIT BEAM REINFORCEMENT SCHEDULE

HUDSON YARDS - RETAIL PODIUM AND TOWER A

500 WEST 33RD STREET
New York, NY

Client
Related Companies
60 Columbus Circle
New York, NY 10023
TEL: 212.801.1000 FAX: 212.801.1048

Oxford Properties Group
320 Park Avenue, 17th Floor
New York, NY 10022
TEL: 212.986.7514 FAX: 212.986.7510

Architect
Kohn Pedersen Fox Associates
11 West 42nd Street
New York, New York 10036
TEL: 212.977.6500 FAX: 212.956.2526

Structural Engineer
Thornton Tomasetti, Inc.
51 Madison Avenue
New York, New York 10010
TEL: 917.661.7800 FAX: 718.661.7801

Mechanical, Electrical, Plumbing, Fire Protection
Jaros Baum & Bolles Consulting Engineers
80 Pine Street
New York, NY 10013
TEL: 212.530.9300 FAX: 212.269.5894

Retail Interior Design & Planning
Elkus-Manfredi
300 A Street
Boston, MA 02210
TEL: 617.426.1300

No	Description	Date
1	D.O.B AMENDMENT #2	10/15/2016

Key Plan

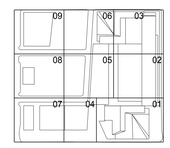

Issue Date 10/15/2016
Project No. N11328.00
Drawn By
Sheet Number

THE STATE OF NEW YORK · DANIEL V. FOX · LICENSED ARCHITECT · 030 · NATIONAL COUNCIL OF ARCHITECTURAL REGISTRATION BOARDS

HYE-TA-S5-3005
Drawing Title

SCHEDULES AND DETAILS

Drawing Number
S5-3005
Acad Drawing Number
S-754.00

Damian Titus
Buildings
APPROVED
Under Directive 2 of 1975
MUNICIPAL REGULATION
Date: 05/03/2017
NYC Development Hub

© 2013 KOHN PEDERSEN FOX ASSOCIATES PC. All rights reserved.

DEPT OF BLDGS 121186251 Job Number
ES884622199 Scan Code

HUDSON YARDS - RETAIL PODIUM AND TOWER A

500 WEST 33RD STREET
New York, NY

Weld Information

Shape	D	BF	TF	TW	Location	Size
BW16X16X3X1	16"	16"	3"	1"	All locations	1/2" FILLET (two-sided)
BW18X18X4X3	18"	18"	4"	3"	All locations	1/2" FILLET (two-sided)
BW21X16X1.5X1.5	21"	16"	1.5"	1.5"	All locations	1/2" FILLET (two-sided)
BW21X16X3X1.5	21"	16"	3"	1.5"	Level 25, Grid 15.0, between Grids C.1 and D.1	5/8" FILLET (two-sided)
					Level 26, Grid 15.0, between Grids C.1 and D.1	
					Level 27, Grid 15.0, between Grids C.1 and D.1	
					Level 28, Grid 15.0, between Grids C.1 and D.1	
					Level 29, Grid 15.0, between Grids C.1 and D.1	
					Level 25, Grid 15.0, between Grids D.1 and E.1	5/8" FILLET (two-sided)
					Level 30, Grid 15.0, between Grids C.1 and D.1	
BW22X18X2X2	22"	18"	2"	2"	All locations	1/2" FILLET (two-sided)
BW22X18X4X3	22"	18"	4"	3"	Level 50, Grid 13.9, between Grids C.1 and D.1	11/16" PJP (two-sided)
					Level 51, Grid 13.9, between Grids C.1 and D.1	5/8" PJP (two-sided)
					Level 49, Grid 13.9, between Grids C.1 and D.1	5/8" PJP (two-sided)
BW23X18X3.5X2	23"	18"	3.5"	2"	Level 37, Grid 13.9, between Grids C.1 and D.1	11/16" PJP (two-sided)
					Level 38, Grid 13.9, between Grids C.1 and D.1	
					Level 32, Grid 13.9, between Grids D.1 and E.1	13/16" PJP (two-sided)
					Level 33, Grid 13.9, between Grids D.1 and E.1	
					Level 34, Grid 13.9, between Grids D.1 and E.1	
					Level 36, Grid 13.9, between Grids C.1 and D.1	3/4" PJP (two-sided)
					Level 27, Grid 13.9, between Grids D.1 and E.1	CJP
					Level 28, Grid 13.9, between Grids D.1 and E.1	CJP
					Level 29, Grid 13.9, between Grids D.1 and E.1	CJP
					Level 30, Grid 13.9, between Grids D.1 and E.1	13/16" PJP (two-sided)
					Level 31, Grid 13.9, between Grids D.1 and E.1	13/16" PJP (two-sided)
BW23X18X3X3	23"	18"	3"	3"	Level 41, Grid 13.9, between Grids C.1 and D.1	11/16" PJP (two-sided)
					Level 42, Grid 13.9, between Grids C.1 and D.1	13/16" PJP (two-sided)
					Level 43, Grid 13.9, between Grids C.1 and D.1	7/8" PJP (two-sided)
					Level 44, Grid 13.9, between Grids C.1 and D.1	
					Level 45, Grid 13.9, between Grids C.1 and D.1	
					Level 46, Grid 13.9, between Grids C.1 and D.1	
					Level 47, Grid 13.9, between Grids C.1 and D.1	
					Level 48, Grid 13.9, between Grids C.1 and D.1	
BW23X18X4.5X3	23"	18"	4.5"	3"	Level 26, Grid 13.9, between Grids C.1 and D.1	1 1/16" PJP (two-sided)
					Level 27, Grid 13.9, between Grids C.1 and D.1	
					Level 28, Grid 13.9, between Grids C.1 and D.1	
					Level 26, Grid 13.9, between Grids D.1 and E.1	1" PJP (two-sided)
					Level 29, Grid 13.9, between Grids C.1 and D.1	
					Level 30, Grid 13.9, between Grids C.1 and D.1	
BW23X18X4X2.5	23"	18"	4"	2.5"	Level 35, Grid 13.9, between Grids D.1 and E.1	13/16" PJP (two-sided)
					Level 36, Grid 13.9, between Grids D.1 and E.1	
					Level 37, Grid 13.9, between Grids D.1 and E.1	
					Level 38, Grid 13.9, between Grids D.1 and E.1	
					Level 31, Grid 13.9, between Grids C.1 and D.1	15/16" PJP (two-sided)
					Level 32, Grid 13.9, between Grids C.1 and D.1	
					Level 33, Grid 13.9, between Grids C.1 and D.1	
					Level 34, Grid 13.9, between Grids C.1 and D.1	7/8" PJP (two-sided)
					Level 35, Grid 13.9, between Grids C.1 and D.1	
BW23X18X5X3.5	23"	18"	5"	3.5"	Level 23, Grid 13.9, between Grids E.1 and F.6	1 1/4" PJP (two-sided)
					Level 25, Grid 13.9, between Grids D.1 and E.1	1 1/8" PJP (two-sided)
					Level 25, Grid 13.9, between Grids C.1 and D.1	1" PJP (two-sided)
					Level 23, Grid 13.9, between Grids C.1 and D.1	11/16" PJP (two-sided)
					Level 24, Grid 13.9, between Grids E.1 and F.6	13/16" PJP (two-sided)
					Level 24, Grid 13.9, between Grids C.1 and D.1	3/4" PJP (two-sided)
					Level 25, Grid 13.9, between Grids E.1 and F.9	5/8" PJP (two-sided)
					Level 23, Grid 13.9, between Grids D.1 and E.1	7/8" PJP (two-sided)
					Level 24, Grid 13.9, between Grids D.1 and E.1	
BW24.625X24X6X4	24.625"	24"	6"	4"	All locations	1/2" FILLET (two-sided)
BW24.625X28X6X4	24.625"	28"	6"	4"	Level 5. to 6., Grid E.6, between Grids 14.0 and 13.8	1/2" FILLET (two-sided)
					Level 6. to 7., Grid E.6, between Grids 14.3 and 14.0	
					Level 7. to M7., Grid E.6, between Grids 14.4 and 14.3	
					Level 7. to 8., Grid E.6, between Grids 14.5 and 14.4	9/16" FILLET (two-sided)
BW24X16X4X1	24"	16"	4"	1"	All locations	1/2" FILLET (two-sided)
BW24X18X5X4	24"	18"	5"	4"	All locations	1/2" FILLET (two-sided)
BW24X18X6X2+2"SP	24"	18"	6"	2"	All locations	1/2" FILLET (two-sided)
BW24X18X6X2+2.5"SP	24"	18"	6"	2"	Level 21 to 22, Grid E.6, between Grids 16.5 and 17.0	1" PJP (two-sided)
BW24X18X6X4	24"	18"	6"	4"	All locations	1/2" FILLET (two-sided)
BW24X18X7X3+2"SP	24"	18"	7"	3"	All locations	1/2" FILLET (two-sided)
BW24X18X8X8+2"SP	24"	18"	8"	8"	All locations	1/2" FILLET (two-sided)
BW24X21X8X6	24"	21"	8"	6"	Level 21 to 22, Grid 16.0, between Grids B.0 and C.1	3" PJP (two-sided)
BW24X24X3.5X2	24"	24"	3.5"	2"	(see below)	
BW24X24X3X2	24"	24"	3"	2"	All locations	1/2" FILLET (two-sided)
BW24X24X4.5X4	24"	24"	4.5"	4"	All locations	2" PJP (two-sided)
BW24X24X4X2	24"	24"	4"	2"	(see below)	
BW24X24X4X3	24"	24"	4"	3"	All locations	1/2" FILLET (two-sided)
BW24X24X4X4	24"	24"	4"	4"	Level 15 to 16, between Grids L.4 and L.3 and 15.0 and 15.1	1 13/16"PJP (two-sided)
					Level 17 to 18, Grid 12.9, between Grids C.0 and B.6	1 9/16" PJP (two-sided)
					Level 10 to 11, Grid 12.9, between Grids E.0 and D.6	1/2" FILLET (two-sided)
					Level 10 to 11, Grid L.6, between Grids 15.6 and 15.8	
					Level 11 to 12, between Grids L.6 and L.5 and 15.4 and 15.6	
					Level 11 to 12, Grid 12.9, between Grids D.6 and D.2	
					Level 12 to 13, between Grids L.5 and L.4 and 15.2 and 15.4	
					Level 12 to 13, Grid 12.9, between Grids D.2 and C.8	
					Level 13 to 14, Grid L.4, between Grids 15.0 and 15.2	
					Level 14 to 15, between Grids L.4 and L.3 and 14.9 and 15.0	
					Level 14 to 15, Grid 12.9, between Grids C.5 and C.2	
					Level 15 to 16, between Grids L.4 and L.3 and 14.9 and 15.0	
					Level 15 to 16, Grid 12.9, between Grids C.5 and C.2	
					Level 16 to 17, Grid 12.9, between Grids C.2 and B.9	
					Level 16 to 17, Grid L.3, between Grids 14.7 and 14.9	
					Level 17 to 18, between Grids L.3 and L.2 and 13.5 and 13.7	
					Level 17 to 18, between Grids L.3 and L.2 and 14.6 and 14.7	
					Level 17 to 18, Grid 12.9, between Grids B.9 and C.0	
					Level 18 to 19, between Grids L.2 and L.1 and 13.4 and 13.5	
					Level 18 to 19, between Grids L.2 and L.1 and 14.5 and 14.6	
					Level 18 to 19, Grid 12.9, between Grids B.6 and B.3	
					Level 19 to 20, Grid 12.9, between Grids B.3 and B.0	
					Level 19 to 20, Grid 12.9, between Grids G.6 and G.2	
					Level 19 to 20, Grid A.0, between Grids 14.2 and 14.3	
					Level 19 to 20, Grid L.1, between Grids 13.2 and 13.4	
					Level 19 to 20, Grid L.1, between Grids 14.4 and 14.5	
					Level 20 to 21, Grid 13.0 between Grids B.3 and B.0	
					Level 20 to 21, Grid 13.0 between Grids G.6 and G.2	
					Level 20 to 21, Grid A.0, between Grids 14.2 and 14.7	
					Level 20 to 21, Grid HS between Grids 13.2 and 13.4	
					Level 20 to 21, Grid HS between Grids 14.4 and 14.5	
					Level 13 to 14, Grid 12.9, between Grids C.8 and D.0	11/16" FILLET (two-sided)
					Level 13 to 14, Grid 12.9, between Grids D.0 and C.5	5/8" PJP (two-sided)

Shape	D	BF	TF	TW	Location	Size
BW24X24X4X4	24"	24"	4"	4"	Level 21 to 22, Grid 13.9, between Grids B.0 and C.0	2" PJP (two-sided)
BW24X18X6X2+2.5"SP	24"	18"	6"	2"	Level 1. to 3., Grid C.9, between Grids 15.5 and 16.0	1/2" FILLET (two-sided)
					Level 39 to 40, Grid 16.0, between Grids F.1 and E.7	
					Level 60 to 61, Grid 13.9, between Grids C.1 and C.7	
BW24X24X4X2	24"	24"	4"	2"	Level 1. to 3., Grid D.7, between Grids 15.5 and 16.0	1/2" FILLET (two-sided)
					Level 21 to 22, Grid 14.0, between Grids H.0 and H.6	1" PJP (two-sided)
					Level 21 to 22, Grid 15.0, between Grids A.0 and B.0	
					Level 21 to 22, Grid 15.0, between Grids D.1 and D.7	
					Level 21 to 22, Grid A.0, between Grids 14.5 and 14.0	
					Level 21 to 22, Grid B.0, between Grids 15.5 and 16.0	
					Level 23 to 24, Grid H.7, between Grids 17.0 and 16.4	1/2" FW (two-sided)
					Level 39 to 40, Grid F.2, between Grids 14.5 and 13.9	
					Level 4. to 5., Grid D.7, between Grids 16.0 and 15.7	
					Level 61 to 62, Grid B.0, between Grids 14.7 and 14.3	
BW24X24X5.5X4	24"	24"	5.5"	4"	Level 21 to 22, Grid 15.0, between Grids E.1 and E.6	2" PJP (two-sided)
					Level 21 to 22, Grid 15.0, between Grids E.6 and F.2	
					Level 3. to 4., Grid C.1, between Grids 15.7 and 15.5	1/2" FW (two-sided)
					Level 4. to 5., Grid C.1, between Grids 15.0 and 15.5	

Weld Information

Shape	D	BF	TF	TW	Location	Size
BW24X24X5.5X4	24"	24"	5.5"	4"	(see below)	
BW24X24X5X2	24"	24"	5"	2"	All locations	1/2" FILLET (two-sided)
BW24X24X5X3	24"	24"	5"	3"	All locations	1/2" FILLET (two-sided)
BW24X24X5X4	24"	24"	5"	4"	Level 17 to 18, Grid 12.9, between Grids G.6 and F.0	1 3/8" PJP (two-sided)
					Level 17 to 18, Grid 12.9, between Grids H.9 and J.0	1 5/16" PJP (two-sided)
					Level 15 to 16, between Grids L.4 and L.3 and 13.9 and 14.0	CJP (two-sided)
					Level 11 to 12, Grid 12.9, between Grids G.6 and G.2	1/2" FILLET (two-sided)
					Level 11 to 12, Grid A.0, between Grids 14.9 and 14.9	
					Level 12 to 13, between Grids L.5 and L.4 and 14.1 and 14.2	
					Level 12 to 13, Grid 12.9, between Grids G.6 and G.2	
					Level 12 to 13, Grid A.0, between Grids 14.7 and 14.9	
					Level 13 to 14, Grid A.0, between Grids 14.6 and 14.7	
					Level 13 to 14, Grid L.4, between Grids 14.0 and 14.1	
					Level 14 to 15, between Grids L.4 and L.3 and 13.8 and 14.0	
					Level 14 to 15, Grid 12.9, between Grids G.6 and G.2	
					Level 14 to 15, Grid A.0, between Grids 14.6 and 14.6	
					Level 15 to 16, between Grids L.4 and L.3 and 13.8 and 13.9	
					Level 15 to 16, Grid 12.9, between Grids G.6 and G.2	
					Level 15 to 16, Grid A.0, between Grids 14.6 and 14.6	
					Level 16 to 17, Grid 12.9, between Grids G.6 and G.2	
					Level 16 to 17, Grid A.0, between Grids 14.5 and 14.6	
					Level 16 to 17, Grid L.3, between Grids 13.7 and 13.8	
					Level 17 to 18, Grid 12.9, between Grids F.0 and G.2	
					Level 17 to 18, Grid 12.9, between Grids J.0 and H.6	
					Level 17 to 18, Grid A.0, between Grids 14.4 and 14.5	
					Level 18 to 19, Grid 12.9, between Grids G.6 and G.2	
					Level 18 to 19, Grid A.0, between Grids 14.3 and 14.4	
					Level 19 to 20, Grid 12.9, between Grids H.3 and H.0	
					Level 20 to 21, Grid 12.9, between Grids H.0 and H.8	
					Level 21 to 22, between Grids A.0 and B.0 and 14.0 and 13.9	2" PJP
					Level 21 to 22, between Grids F.6 and F.9 and 13.9 and 14.0	2" PJP
					Level 21 to 22, Grid E.1, between Grids 13.0 and 14.0	2" PJP
					Level 21 to 22, Grid H.8 between Grids 14.9 and 14.5	2" PJP
					Level 21 to 22, Grid H.8 between Grids 15.1 and 14.9	1"3/8 PJP
					Level 3., Grid E.6, between Grids 16.0 and 17.0	
					Level 13 to 14, Grid 12.9, between Grids G.6 and G.0	11/16" FILLET (two-sided)
					Level 13 to 14, Grid 12.9, between Grids G.0 and G.2	11/16" PJP (two-sided)
					Level 10 to 11, Grid A.0, between Grids 14.9 and 15.1	9/16" FILLET (two-sided)
BW24X24X6X2	24"	24"	6"	2"	All locations	1/2" FILLET (two-sided)
BW24X24X6X4	24"	24"	6"	4"	Level 10 to 11, Grid 12.9, between Grids G.6 and G.2	1/2" FILLET (two-sided)
					Level 10 to 11, Grid L.6, between Grids 14.3 and 14.5	
					Level 11 to 12, between Grids L.6 and L.5 and 14.2 and 14.3	
					Level 14 to 15, Grid 12.9, between Grids J.5 and J.2	
					Level 15 to 16, Grid 12.9, between Grids J.5 and J.2	
					Level 16 to 17, Grid 12.9, between Grids J.2 and H.9	
					Level 17 to 18, Grid A.0, between Grids 15.4 and 15.5	
					Level 18 to 19, Grid 12.9, between Grids H.6 and H.3	
					Level 18 to 19, Grid A.0, between Grids 15.3 and 15.4	
					Level 19 to 20, Grid A.0, between Grids 15.5 and 15.6	
					Level 20 to 21, Grid A.0, between Grids 15.2 and 15.6	
					Level 21 to 22, Grid F.6 between Grids 13.4 and 12.9	2" PJP
					Level 39 to 40, Grid D.1, between Grids 12.9 and 13.9	1/2" FILLET
					Level 13 to 14, Grid 12.9, between Grids K.0 and J.5	9/16" FILLET (two-sided)
BW24X24X7X2	24"	24"	7"	2"	All locations	1/2" FILLET (two-sided)
BW24X24X7X3+2"SP	24"	24"	7"	3"	All locations	1/2" FILLET (two-sided)
BW24X24X7X4	24"	24"	7"	4"	Level 10 to 11, Grid 12.9, between Grids L.0 and K.6	1/2" FILLET (two-sided)
					Level 10 to 11, Grid A.0, between Grids 16.2 and 16.4	
					Level 11 to 12, Grid 12.9, between Grids K.6 and K.2	
					Level 11 to 12, Grid A.0, between Grids 16.1 and 16.2	
					Level 12 to 13, Grid 12.9, between Grids K.2 and J.8	
					Level 12 to 13, Grid A.0, between Grids 15.9 and 16.1	
					Level 13 to 14, Grid A.0, between Grids 15.8 and 15.9	
					Level 14 to 15, Grid A.0, between Grids 15.7 and 15.8	
					Level 15 to 16, Grid A.0, between Grids 15.7 and 15.8	
					Level 16 to 17, Grid A.0, between Grids 15.2 and 15.7	
					Level 21 to 22, Grid 16.0, between Grids H.7 and K.0	2" PJP
					Level 16 to 17, Grid A.0, between Grids 15.5 and 15.2	3/4" FILLET (two-sided)
					Level 13 to 14, Grid 12.9, between Grids J.8 and K.0	5/8" FILLET (two-sided)
BW24X24X8X4	24"	24"	8"	4"	All locations	1/2" FILLET (two-sided)
BW25X16X1.5X1	25"	16"	1.5"	1"	All locations	9/16" FILLET (two-sided)
BW25X16X1X1	25"	16"	1"	1"	All locations	1/2" FILLET (two-sided)
BW25X16X2X1	25"	16"	2"	1"	All locations	1/2" FILLET (two-sided)
BW25X16X3.5X1	25"	16"	3.5"	1"	All locations	1/2" FILLET (two-sided)
BW25X18X1.5X1	25"	18"	1.5"	1"	All locations	1/2" FILLET (two-sided)
BW25X18X2.5X1	25"	18"	2.5"	1"	All locations	1/2" FILLET (two-sided)
BW25X18X2X1	25"	18"	2"	1"	All locations	1/2" FILLET (two-sided)
BW25X18X3.5X1	25"	18"	3.5"	1"	All locations	1/2" FILLET (two-sided)
BW25X18X3X1	25"	18"	3"	1"	All locations	1/2" FILLET (two-sided)
BW25X18X4X1	25"	18"	4"	1"	All locations	1/2" FILLET (two-sided)
BW25X18X4X2	25"	18"	4"	2"	Level 60, Grid D.1, between Grids 15.0 and 16.0	1/2" FILLET (two-sided)
					Level 39, Grid 13.9, between Grids D.1 and E.1	11/16" PJP (two-sided)
					Level 39, Grid E.1, between Grids 15.0 and 16.0	9/16" FILLET (two-sided)
					Level 60, Grid E.1, between Grids 15.0 and 16.0	9/16" FILLET (two-sided)
BW25X18X5X1	25"	18"	5"	1"	All locations	1/2" FILLET (two-sided)
BW25X18X5X2	25"	18"	5"	2"	All locations	1/2" FILLET (two-sided)
BW25X18X5X2+1"SP	25"	18"	5"	2"	All locations	1/2" FILLET (two-sided)
BW25X18X6X2	25"	18"	6"	2"	All locations	1/2" FILLET (two-sided)
BW25X18X7X4+3"SP	25"	18"	7"	4"	All locations	1/2" FILLET (two-sided)
BW25X18X8X4+2"SP	25"	18"	8"	4"	All locations	1/2" FILLET (two-sided)
BW25X19X4X2	25"	19"	4"	2"	All locations	5/8" PJP (two-sided)
BW25X19X5X1	25"	19"	5"	1"	All locations	1/2" FILLET (two-sided)
BW25X20X3X1	25"	20"	3"	1"	All locations	1/2" FILLET (two-sided)
BW25X20X3X2	25"	20"	3"	2"	All locations	9/16" PJP (two-sided)
BW25X20X4X2	25"	20"	4"	2"	All locations	9/16" FILLET (two-sided)
BW25X20X5X1	25"	20"	5"	1"	All locations	1/2" FILLET (two-sided)
BW25X20X5X3	25"	20"	5"	3"	All locations	15/16" PJP (two-sided)
BW25X20X6X1	25"	20"	6"	1"	All locations	1/2" FILLET (two-sided)
BW25X22X4X1	25"	22"	4"	1"	All locations	1/2" FILLET (two-sided)
BW25X24X4X1	25"	24"	4"	1"	All locations	1/2" FILLET (two-sided)

Shape	D	BF	TF	TW	Location	Size
BW24X24X3.5X2	24"	24"	3.5"	2"	Level 1. to M2., Grid E.6, between Grids 16.7 and 17.0	1/2" FILLET (two-sided)
					Level 21 to 22, between Grids D.1 and D.3 and 14.0 and 13.9	1" PJP (two-sided)
					Level 21 to 22, between Grids E.1 and E.2 and 14.0 and 13.9	
					Level 21 to 22, between Grids G.1 and H.0 and 14.9 and 15.0	
					Level 21 to 22, between Grids K.0 and P.9 and 16.7 and 16.0	
					Level 21 to 22, between Grids K.9 and L.1 and 15.8 and 15.1	
					Level 21 to 22, Grid 12.9, between Grids G.4 and G.1	
					Level 21 to 22, Grid 14.0, between Grids J.0 and K.0	
					Level 21 to 22, Grid 14.9, between Grids H.0 and H.6	
					Level 21 to 22, Grid 15.0, between Grids B.0 and C.1	
					Level 21 to 22, Grid 16.0, between Grids D.7 and E.6	
					Level 21 to 22, Grid 16.0, between Grids E.6 and F.9	
					Level 21 to 22, Grid 16.0, between Grids F.9 and G.6	
					Level 21 to 22, Grid 16.0, between Grids G.6 and	
					Level 21 to 22, Grid 17.0, between Grids J.7 and P.7	
					Level 21 to 22, Grid A.0, between Grids 15.0 and 14.5	
					Level 21 to 22, Grid A.0, between Grids 15.1 and 15.6	
					Level 21 to 22, Grid B.0, between Grids 14.3 and 13.9	
					Level 21 to 22, Grid B.0, between Grids 14.6 and 15.0	
					Level 21 to 22, Grid C.1, between Grids 16.5 and 17.0	
					Level 21 to 22, Grid C.9, between Grids 16.5 and 17.0	
					Level 21 to 22, Grid D.1, between Grids 13.4 and 12.9	
					Level 21 to 22, Grid D.7, between Grids 16.5 and 17.0	
					Level 21 to 22, Grid F.9, between Grids 16.4 and 17.0	
					Level 21 to 22, Grid G.1, between Grids 13.4 and 12.9	
					Level 21 to 22, Grid G.6, between Grids 16.0 and 17.0	
					Level 21 to 22, Grid H.6, between Grids 15.4 and 15.9	
					Level 23 to 24, between Grids G.6 and H.4 and 15.9 and 16.0	1/2" FW (two-sided)
					Level 23 to 24, Grid 16.4, between Grids H.0 and G.9	
					Level 23 to 24, Grid 16.4, between Grids H.7 and H.0	
					Level 39 to 40, between Grids G.7 and F.2 and 16.0 and 15.9	
					Level 39 to 40, Grid C.1, between Grids 16.0 and 17.0	
					Level 39 to 40, Grid F.2, between Grids 12.9 and 13.9	
					Level 6., Grid 16.0, between Grids D.8 and E.8	

Weld Information

Shape	D	BF	TF	TW	Location	Size
BW25X24X6X1	25"	24"	6"	1"	All locations	1/2" FILLET (two-sided)
BW26.725X18X3X2	26.725"	18"	3"	2"	All locations	5/8" FILLET (two-sided)
BW26X18X3X2	26"	18"	3"	2"	All locations	1/2" FILLET (two-sided)
BW26X18X4X2	26"	18"	4"	2"	All locations	1" PJP (two-sided)
BW26X18X4X3	26"	18"	4"	3"	All locations	1"1/2 PJP (two-sided)
BW26X20X4X3	26"	20"	4"	3"	All locations	1"1/2 PJP (two-sided)
BW26X26X5X2	26"	26"	5"	2"	All locations	1/2" FILLET (two-sided)
BW26X28X6X3	26"	28"	6"	3"	All locations	1"1/2 PJP (two-sided)
BW28X14X2.5X0.75	28"	14"	2.5"	0.75"	All locations	CJP
BW28X14X3X1.5	28"	14"	3"	1.5"	Level 26, Grid F.2, between Grids 15.0 and 16.0	1/2" FILLET (two-sided)
					Level 27, Grid F.2, between Grids 15.0 and 16.0	9/16" FILLET (two-sided)
					Level 28, Grid F.2, between Grids 15.0 and 16.0	
					Level 29, Grid F.2, between Grids 15.0 and 16.0	
					Level 30, Grid F.2, between Grids 15.0 and 16.0	
BW28X14X4X2	28"	14"	4"	2"	Level 36, Grid 13.9, between Grids E.1 and F.9	3/4" FILLET (two-sided)
					Level 37, Grid 13.9, between Grids E.1 and F.9	
					Level 38, Grid 13.9, between Grids E.1 and F.9	
					Level 35, Grid 13.9, between Grids E.1 and F.9	5/8" FILLET (two-sided)
BW28X18X3X2	28"	18"	3"	2"	Level 42, Grid E.1, between Grids 15.0 and 16.0	3/4" FILLET (two-sided)
					Level 53, Grid B.0, between Grids 15.0 and 16.0	11/16" FILLET (two-sided)
					Level 43, Grid B.0, between Grids 15.0 and 16.0	3/4" FILLET (two-sided)
					Level 44, Grid B.0, between Grids 15.0 and 16.0	
					Level 45, Grid B.0, between Grids 15.0 and 16.0	
					Level 46, Grid B.0, between Grids 15.0 and 16.0	
					Level 47, Grid B.0, between Grids 15.0 and 16.0	
					Level 48, Grid B.0, between Grids 15.0 and 16.0	
					Level 49, Grid B.0, between Grids 15.0 and 16.0	
					Level 50, Grid B.0, between Grids 15.0 and 16.0	
					Level 51, Grid B.0, between Grids 15.0 and 16.0	
					Level 52, Grid B.0, between Grids 15.0 and 16.0	
					Level 54, Grid B.0, between Grids 15.0 and 16.0	5/8" FILLET (two-sided)
BW28X18X4.5X2	28"	18"	4.5"	2"	Level 27, Grid B.0, between Grids 15.0 and 16.0	13/16" PJP (two-sided)
					Level 28, Grid B.0, between Grids 15.0 and 16.0	
					Level 29, Grid B.0, between Grids 15.0 and 16.0	
					Level 30, Grid B.0, between Grids 15.0 and 16.0	
					Level 31, Grid B.0, between Grids 15.0 and 16.0	
					Level 32, Grid B.0, between Grids 15.0 and 16.0	
					Level 33, Grid B.0, between Grids 15.0 and 16.0	
					Level 34, Grid B.0, between Grids 15.0 and 16.0	
					Level 35, Grid B.0, between Grids 15.0 and 16.0	
					Level 26, Grid B.0, between Grids 15.0 and 16.0	3/4" PJP (two-sided)
					Level 36, Grid B.0, between Grids 15.0 and 16.0	
					Level 37, Grid B.0, between Grids 15.0 and 16.0	
					Level 38, Grid B.0, between Grids 15.0 and 16.0	
BW28X18X4X2	28"	18"	4"	2"	All locations	11/16" PJP (two-sided)
BW28X18X6X4	28"	18"	6"	4"	All locations	1/2" FILLET (two-sided)
BW28X20X4X3	28"	20"	4"	3"	All locations	13/16" PJP (two-sided)
BW28X20X5X3.5	28"	20"	5"	3.5"	All locations	1" PJP (two-sided)
BW28X20X6X2+2"SP	28"	20"	6"	2"	All locations	1" PJP (two-sided)
BW28X24X4X2	28"	24"	4"	2"	All locations	1" PJP (two-sided)
BW28X24X5.5X4	28"	24"	5.5"	4"	Level 1. to 3., Grid C.1, between Grids 15.5 and 15.0	1/2" FILLET (two-sided)
BW28X24X7X4	28"	24"	7"	4"	Level 1. to 3., Grid C.1, between Grids 15.5 and 16.0	1/2" FILLET (two-sided)
BW28X28X4X4	28"	28"	4"	4"	All locations	2" PJP (two-sided)
BW28X28X5.5X4	28"	28"	5.5"	4"	Level 1. to 3., Grid C.1, between Grids 15.5 and 15.0	1/2" FILLET (two-sided)
BW28X28X5X2	28"	28"	5"	2"	All locations	1/2" FILLET (two-sided)
BW28X28X7X4	28"	28"	7"	4"	Level 1. to 3., Grid C.1, between Grids 15.5 and 16.0	1/2" FILLET (two-sided)
BW33X20X4X1	33"	20"	4"	1"	All locations	1/2" FILLET (two-sided)
BW33X20X6X2	33"	20"	6"	2"	All locations	5/8" PJP (two-sided)
BW33X22X6X1	33"	22"	6"	1"	All locations	1/2" FILLET (two-sided)
BW33X24X4X1	33"	24"	4"	1"	All locations	1/2" FILLET (two-sided)
BW33X24X5X3	33"	24"	5"	3"	All locations	11/16" FILLET (two-sided)
BW33X24X6X1	33"	24"	6"	1"	All locations	1/2" FILLET (two-sided)
BW33X24X6X2	33"	24"	6"	2"	All locations	1/2" FILLET (two-sided)
BW33X24X7X2	33"	24"	7"	2"	All locations	1/2" FILLET (two-sided)
BW34X16X3.5X1	34"	16"	3.5"	1"	All locations	1/2" FILLET (two-sided)
BW34X16X6X3	34"	16"	6"	3"	All locations	9/16" FILLET (two-sided)
BW34X18X1X1	34"	18"	1"	1"	All locations	1/2" FILLET (two-sided)
BW34X18X2.5X1	34"	18"	2.5"	1"	All locations	1/2" FILLET (two-sided)
BW34X18X3.5X1	34"	18"	3.5"	1"	All locations	1/2" FILLET (two-sided)
BW34X18X3X1	34"	18"	3"	1"	Level 61, Grid E.1, between Grids 16.0 and 17.0	CJP (two-sided)
BW34X18X4X1	34"	18"	4"	1"	All locations	1/2" FILLET (two-sided)
BW34X18X4X2	34"	18"	4"	2"	Level 61, between Grids B.0 and C.1 and 13.9 and 14.0	5/8" PJP (two-sided)
					Level 40, Grid 16.0, between Grids E.1 and F.9	5/8" PJP (two-sided)
					Level 61, Grid 14.0, between Grids D.1 and E.1	9/16" FILLET (two-sided)
BW34X18X5X2	34"	18"	5"	2"	Level 40, Grid E.1, between Grids 15.0 and 16.0	1/2" FILLET (two-sided)
					Level 61, Grid E.1, between Grids 15.0 and 16.0	3/4" FILLET (two-sided)
BW34X18X6X1	34"	18"	6"	1"	All locations	1/2" FILLET (two-sided)
BW34X18X6X3	34"	18"	6"	3"	All locations	1/2" FILLET (two-sided)
BW34X18X7X4+3"SP	34"	18"	7"	4"	All locations	1/2" FILLET (two-sided)
BW34X18X8X4	34"	18"	8"	4"	All locations	5/8" PJP (two-sided)
BW34X19X3X2	34"	19"	3"	2"	All locations	9/16" FILLET (two-sided)
BW34X19X5X1	34"	19"	5"	1"	All locations	1/2" FILLET (two-sided)
BW34X19X6X1	34"	19"	6"	1"	All locations	1/2" FILLET (two-sided)
BW34X20X4X1	34"	20"	4"	1"	All locations	1/2" FILLET (two-sided)
BW34X20X7X2	34"	20"	7"	2"	All locations	9/16" FILLET (two-sided)
BW34X22X6X2	34"	22"	6"	2"	All locations	1/2" FILLET (two-sided)
BW36X16X2X1	36"	16"	2"	1"	All locations	1/2" FILLET (two-sided)
BW36X18X3.5X1.5	36"	18"	3.5"	1.5"	All locations	3/4" PJP (two-sided)
BW36X18X4X1.5	36"	18"	4"	1.5"	All locations	3/4" PJP (two-sided)
BW36X24X4X4	36"	24"	4"	4"	Level LD, Grid 16.0, between Grids E.8 and F.9	1/2" FILLET (two-sided)
					Level LD, Grid 17.0, between Grids D.8 and E.8	
					Level LD, Grid 17.0, between Grids E.8 and F.9	
					Level LD, Grid 16.0, between Grids C.1 and C.9	11/16" PJP (two-sided)
					Level LD, Grid 16.0, between Grids C.9 and D.8	11/16" FILLET (two-sided)
					Level LD, Grid 17.0, between Grids C.9 and D.8	3/4" FILLET (two-sided)
					Level 10, Grid 14.0, between Grids F.0 and G.0	9/16" FILLET (two-sided)
					Level LD, Grid 16.0, between Grids D.8 and E.8	

Shape	D	BF	TF	TW	Location	Size
BW28X24X5.5X4	28"	24"	5.5"	4"	Level 21 to 22, Grid 17.0, between Grids E.6 and F.9	2" PJP (two-sided)
					Level 21 to 22, Grid 17.0, between Grids G.3 and G.9	
BW28X24X7X4	28"	24"	7"	4"	Level 21 to 22, Grid 17.0, between Grids C.1 and C.0	2" PJP (two-sided)
BW28X28X3.5X2	28"	28"	3.5"	2"	Level 21 to 22, between Grids J.0 and K.0 and 15.0 and 14.9	1" PJP (two-sided)
BW28X28X4.5X4	28"	28"	4.5"	4"	Level 21 to 22, Grid 14.9, between Grids H.6 and J.0	2" PJP (two-sided)
BW28X28X4X3	28"	28"	4"	3"	Level 21 to 22, Grid 14.0, between Grids H.6 and J.0	1"1/2 PJP (two-sided)
BW28X28X8X4	28"	28"	8"	4"	Level 21 to 22, Grid B.0, between Grids 13.4 and 12.9	2" PJP (two-sided)
					Level 39 to 40, Grid 16.0, between Grids A.0 and B.0	1/2" FILLET (two-sided)
BW30X30X5X3	30"	30"	5"	3"	Level 60 to 61, Grid 16.0, between Grids A.0 and B.0	1/2" FILLET (two-sided)
BW30X30X7X3	30"	30"	7"	3"	Level 60 to 61, Grid B.0, between Grids 16.0 and 17.0	1/2" FILLET (two-sided)
BW30X30X8X5	30"	30"	8"	5"	Level 39 to 40, Grid B.0, between Grids 13.9 and 12.9	1/2" FILLET (two-sided)
BW28X28X7X4	28"	28"	7"	4"	Level 39 to 40, Grid B.0, between Grids 16.0 and 17.0	1/2" FILLET (two-sided)
BW28X16X4X1	28"	16"	4"	1"	Level 20, Grid 16.0, between Grids D.8 and E.8	1/2" FILLET (two-sided)
BW28X26X8X4	28"	26"	8"	4"	Level 23 to 24, between Grids H.7 and H.4 and 15.9 and 16.0	1/2" FILLET (two-sided)

Weld Information

Shape	D	BF	TF	TW	Location	Size
BW36X24X5X4	36"	24"	5"	4"	All locations	1/2" FILLET (two-sided)
BW36X24X6X5	36"	24"	6"	5"	All locations	2 1/4" PJP (two-sided)
BW36X262+TW	36.8898"	16.6142"	1.44"	1.2201"	All locations	5/8" PJP (two-sided)
BW36X30X4X4	36"	30"	4"	4"	All locations	5/8" PJP (two-sided)
BW38X16X2.5X1	38"	16"	2.5"	1"	All locations	1/2" PJP (two-sided)
BW38X16X2.5X1.5	38"	16"	2.5"	1.5"	All locations	3/4" PJP (two-sided)
BW38X16X3.5X1.5	38"	16"	3.5"	1.5"	All locations	5/8" FILLET (two-sided)
BW38X18X1.5X1.5	38"	18"	1.5"	1.5"	All locations	3/4" FILLET (two-sided)
BW38X18X2.5X1	38"	18"	2.5"	1"	All locations	1/2" PJP (two-sided)
BW38X18X2.5X1.5	38"	18"	2.5"	1.5"	Level 21, between Grids K.0 and H.8 and 16.0 and 17.0	3/4 PJP (two-sided)
					Level 21, Grid 15.0, between Grids B.0 and C.1	13/16 FW (two-sided)
					Level 21, Grid C.9, between Grids 16.0 and 17.0	3/4 PJP (two-sided)
					Level 21, Grid D.1, between Grids 13.0 and 14.0	3/4 PJP (two-sided)
					Level 21, Grid D.8, between Grids 16.0 and 17.0	3/4 PJP (two-sided)
					Level 21, Grid E.1, between Grids 13.0 and 14.0	13/16 FW (two-sided)
					Level 21, Grid 15.0, between Grids G.1 and H.0	3/4 PJP (two-sided)
					Level 21, Grid F.6 between Grids 13.0 and 14.0	13/16 FW (two-sided)
					Level 21, Grid F.6 between Grids 14.0 and 15.0	3/4 PJP (two-sided)
					Level 21, Grid H.6, between Grids 13.0 and 14.0	13/16 FW(two-sided)
					Level 21, Grid K.0, between Grids 14.0 and 15.0	3/4 PJP (two-sided)
					Level 22, Grid 12.9, between Grids H.0 and J.0	3/4 PJP (two-sided)
					Level 22, Grid 17.0, between Grids E.8 and F.9	3/4 PJP (two-sided)
					Level 22, Grid C.9, between Grids 14.9 and 16.0	13/16 FW (two-sided)
					Level 21, Grid E.1, between Grids 14.0 and 15.0	13/16 FW (two-sided)
					Level 21, Grid 13.9, between Grids C.0 and D.0	3/4 PJP (two-sided)
					Level 21, Grid 13.9, between Grids D.0 and E.0	3/4 PJP (two-sided)
					Level 21, Grid 15.0, between Grids F.9 and G.1	7/8 FW(two-sided)
BW38X18X2.5X2	38"	18"	2.5"	2"	Level 22, Grid H.6, between Grids 13.3 and 13.9	1" FW (two-sided)
					Level 22, Grid H.6, between Grids 13.0 and 13.3	1" FW (two-sided)
BW38X18X3.5X1.5	38"	18"	3.5"	1.5"	Level 21, between Grids A.0 and B.0 and 13.9 and 14.0	3/4 PJP (two-sided)
					Level 21, Grid 13.9, between Grids B.0 and C.0	13/16 FW (two-sided)
					Level 21, Grid C.1, between Grids 13.0 and 14.0	3/4 PJP (two-sided)
					Level 21, Grid C.1, between Grids 14.0 and 15.0	3/4 PJP (two-sided)
					Level 22, Grid 13.9, between Grids E.1 and F.6	CJP
					Level 22, Grid L.1, between Grids 14.0 and 14.6	3/4 PJP (two-sided)
					Level 21, Grid C.1, between Grids 16.0 and 17.0	13/16 FW (two-sided)
					Level 21, Grid 15.0, between Grids D.1 and D.8	13/16 FW(two-sided)
					Level 21, Grid 15.0, between Grids H.0 and H.6	3/4 PJP (two-sided)
					Level 21, Grid 15.0, between Grids H.6 and J.0	3/4 PJP (two-sided)
BW38X18X3X3	38"	18"	3"	3"	All locations	3/4" PJP (two-sided)
BW38X18X4X1.5	38"	18"	4"	1.5"	Level 21, Grid 15.0, between Grids A.0 and B.0	3/4 PJP (two-sided)
					Level 21, Grid 17.0, between Grids F.9 and G.6	3/4 PJP (two-sided)
					Level 21, Grid 17.0, between Grids G.6 and H.7	3/4 PJP (two-sided)
					Level 21, Grid 17.1, between Grids H.7 and K.2	3/4 PJP (two-sided)
					Level 21, Grid B.0, between Grids 15.0 and 16.0	3/4 PJP (two-sided)
					Level 21, Grid B.0, between Grids 16.0 and 17.0	3/4 PJP (two-sided)
					Level 22, Grid 14.0, between Grids F.2 and F.9	3/4 PJP (two-sided)
					Level 22, Grid 14.0, between Grids F.9 and H.0	13/16 FW(two-sided)
					Level 22, Grid 16.0, between Grids C.9 and D.8	3/4 PJP (two-sided)
					Level 22, Grid 16.0, between Grids E.8 and F.9	3/4 PJP (two-sided)
					Level 22, Grid 16.0, between Grids H.8 and K.0	3/4 PJP (two-sided)
					Level 22, Grid B.0, between Grids 14.0 and 15.0	3/4 PJP (two-sided)
					Level 22, Grid B.0, between Grids 15.0 and 16.0	3/4 PJP (two-sided)
					Level 21, Grid 15.0, between Grids F.6 and F.9	13/16 FW (two-sided)
					Level 21, Grid 13.9, between Grids E.0 and F.0	3/4 PJP (two-sided)
					Level 21, Grid 13.9, between Grids F.0 and G.0	3/4 PJP (two-sided)
					Level 21, Grid 15.0, between Grids E.8 and F.6	3/4 PJP (two-sided)
					Level 22, Grid 14.0, between Grids G.0 and F.9	3/4 PJP (two-sided)
BW38X18X5X2	38"	18"	5"	2"	Level 21, Grid 15.0, between Grids D.8 and E.1	1" PJP (two-sided)
					Level 21, Grid L.1, between Grids 14.0 and 14.6	1" PJP (two-sided)
					Level 21, Grid 15.0, between Grids E.1 and E.8	1" PJP (two-sided)
					Level 22, Grid 16.0, between Grids G.6 and H.8	1" PJP (two-sided)
BW38X18X6X2	38"	18"	6"	2"	All locations	1" PJP (two-sided)
BW38X18X6X3	38"	18"	6"	3"	Level 22, Grid 15.0, between Grids F.9 and H.0	1"9/16 FW (two-sided)
					Level 22, Grid 15.0, between Grids F.6 and F.9	1"9/16 FW (two-sided)
BW38X18X6X4	38"	18"	6"	4"	All locations	2" PJP (two-sided)
BW38X18X6X6	38"	18"	6"	6"	All locations	3" PJP (two-sided)
BW38X19X3X2	38"	19"	3"	2"	All locations	CJP
BW38X20X6X4	38"	20"	6"	4"	All locations	2" PJP (two-sided)
BW38X24X4.5X2	38"	24"	4.5"	2"	All locations	1" PJP (two-sided)
BW38X24X4X1.5	38"	24"	4"	1.5"	Level 21, Grid 16.0, between Grids H.8 and K.0	13/16" FW (two-sided)

Shape	D	BF	TF	TW	Location	Size
BW42X18X5X2.5	42"	18"	5"	2.5"	All locations	9/16" PJP (two-sided)
BW42X24X4X3	42"	24"	4"	3"	All locations	1/2" FILLET (two-sided)
BW42X24X5X3	42"	24"	5"	3"	All locations	1/2" FILLET (two-sided)
BW42X24X6X3	42"	24"	6"	3"	All locations	1/2" FILLET (two-sided)
BW42X24X7X3	42"	24"	7"	3"	All locations	1/2" FILLET (two-sided)
BW42X24X8X3	42"	24"	8"	3"	Level 5., between Grids F.4 and F.9 and 14.9 and 13.8	1/2" FILLET (two-sided)
					Level 5., between Grids F.9 and H.0 and 13.8 and 14.9	
					Level 10, Grid A.0, between Grids 14.0 and 14.5	11/16" FILLET (two-sided)
					Level 5., Grid 17.0, between Grids A.6 and C.1	11/16" PJP (two-sided)
BW42X30X6X4	42"	30"	6"	4"	All locations	1/2" FILLET (two-sided)
BW42X30X7X4	42"	30"	7"	4"	All locations	11/16" PJP (two-sided)

Shape	D	BF	TF	TW	Location	Size
BW24.625X18X6X4	24.625	18"	6"	4"	All locations	1/2" FILLET (two-sided)
BW28X22X4X2	28"	22"	4"	2"	Level 21 to 22, Grid 17.0, between Grids D.7 and E.6	1" PJP (two-sided)
BW24X18X6X2	24"	18"	6"	2"	Level 21 to 22, Grid 16.0, between Grids C.1 and C.9	1" PJP (two-sided)
BW24X18X6X2	24"	18"	6"	2"	Level 21 to 22, Grid 16.0, between Grids D.7 and C.9	1" PJP (two-sided)
BW28X28X6X3+2"SP	28"	28"	6"	3"	Level 21 to 22, Grid 16.0, between Grids A.0 and B.0	1"1/2 PJP (two-sided)
BW40X20X8X4	40"	20"	8"	4"	Level 40, Grid 14.4, between Grids E.1 and F.2	1 3/16" PJP (two-sided)
BW40X24X8X2	40"	24"	8"	2"	Level 40, Grid F.1, between Grids 15.0 and 16.0	5/8" PJP (two-sided)
BW17X16.81X3.21X2.02	17"	16.81"	3.21"	2.02"	All locations	1/2" FILLET (two-sided)
BW18.7X16X3.04X1.88	18.7"	16"	3.04"	1.88"	All locations	1/2" FILLET (two-sided)
BW16X16X3X2	16"	16"	3"	2"	All locations	1/2" FILLET (two-sided)
BW23X18X5.5X4	23"	18"	5.5"	4"	All locations	1/2" FILLET (two-sided)
BW24X16X8X4	24"	16"	8"	4"	All locations	1/2" FILLET (two-sided)
BW34X18X3X1	34"	18"	3"	1"	Level 40, Grid 13.9, between Grids A.0 and B.0	1/2" FILLET (two-sided)
					Level 40, Grid 14.0, between Grids C.1 and D.1	
					Level 40, Grid 14.0, between Grids D.1 and E.1	
					Level 40, Grid 15.0, between Grids B.0 and C.1	
					Level 40, Grid C.1, between Grids 14.0 and 15.0	
					Level 40, Grid D.1, between Grids 15.0 and 16.0	
BW38X18X1.5X2.5	38"	18"	1.5"	2.5"	All locations	9/16" PJP (two-sided)
BW38X24X4X1.5	38"	24"	4"	1.5"	Level 21, Grid 16.0, between Grids G.6 and H.8	13/16" FW (two-sided)
BW40X16X2.5X1.5	40"	16"	2.5"	1.5"	Level RF, Grid C.1, between Grids 15.0 and 16.0	1/2" FILLET (two-sided)
					Level RF, Grid C.8, between Grids 15.0 and 16.0	
					Level RF, Grid B.0, between Grids 15.0 and 16.0	5/8" FILLET (two-sided)
					Level RF, Grid 16.0, between Grids B.0 and C.1	9/16" PJP (two-sided)
					Level RF, Grid 14.7, between Grids C.1 and C.8	CJP
					Level RF, Grid 15.0, between Grids B.0 and C.1	
					Level RF, Grid C.1, between Grids 14.0 and 15.0	
BW41X18X3X2	41"	18"	3"	2"	All locations	CJP
BW42X30X4X3-A	42"	30"	4"	3"	All locations	1/2" FILLET (two-sided)
BW16X16X4X1	25"	16"	3.5"	1"	Level 65 to 66, Grid 16.0, between Grids C.1 and C.8	1/2" FILLET (two-sided)
BW25X20X4X1	25"	20"	4"	1"	Level 60, Grid 13.9, between Grids E.1 and H.7	1/2" FILLET (two-sided)
BW24X18X6X3	24"	18"	6"	3"	Level 60 to 61, Grid 13.9, between Grids D.1 and D.6	1/2" FILLET (two-sided)
BW26X26X4X2	26"	26"	4"	2"	Level 60 to 61, between Grids H.7 and E.1 and 16.0 and 15.9	1/2" FILLET (two-sided)
BW21X10.5X4X2	21"	10.5"	4"	2"	Level 39, Grid C.8, between Grids 15.0 and 16.0	5/8" FILLET (two-sided)
BW14X10X.375X.25	14"	10"	0.375"	0.25"	All locations	3/16" FILLET (two-sided)
BW21X9X1X.5	21"	9"	1"	0.5"	All locations	5/16" FILLET (two-sided)
BW40X12X.75X.5	40"	12"	0.75"	0.5"	All locations	5/16" FILLET (two-sided)
BW40X16X3X1.5	40"	16"	3"	1.5"	All locations	15/16" FILLET (two-sided)
BW40X24X4X2	40"	24"	4"	2"	All locations	[illegible] (two-sided)
BW40X16X2.5X1.5	40"	16"	2.5"	1.5"	All locations	CJP

Damian Titus
NYC Buildings
APPROVED
Under Directive 2 of 1975
AMENDED APPLICATION
Date: [illegible]
NYC Development Hub

Client
Related Companies
60 Columbus Circle
New York, NY 10023
TEL: 212.801.1000 FAX: 212.801.1048

Oxford Properties Group
320 Park Avenue, 17th Floor
New York, NY 10022
TEL: 212.986.7514 FAX: 212.986.7510

Architect
Kohn Pedersen Fox Associates
11 West 42nd Street
New York, New York 10036
TEL: 212.977.6500 FAX: 212.956.2526

Structural Engineer
Thornton Tomasetti, Inc.
51 Madison Avenue
New York, New York 10010
TEL: 917.661.7800 FAX: 718.661.7801

Mechanical, Electrical, Plumbing, Fire Protection
Jaros Baum & Bolles Consulting Engineers
80 Pine Street
New York, NY 10013
TEL: 212.530.9300 FAX: 212.269.5894

Retail Interior Design & Planning
Elkus-Manfredi
300 A Street
Boston, MA 02210
TEL: 617.426.1300

No.	Description	Date
1	D.O.B AMENDMENT #2	10/15/2016

Key Plan

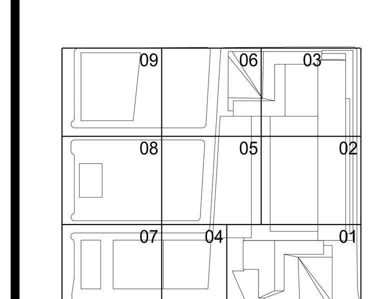

Issue Date 10/15/2016
Project No. N11328.00
Drawn By
Sheet Number

STATE OF NEW YORK · MICHAEL J. SQUARZ[illegible] · LICENSED PROFESSIONAL ENGINEER · 080[illegible]40

HYE-TA-S5-3006
Drawing Title

BW SHAPE SUBSTITUTION SCHEDULES

Drawing Number
S5-3006
B-Scan Drawing Number
S-755.00

© 2013 KOHN PEDERSEN FOX ASSOCIATES PC. All rights reserved.

Shape	D (IN)	BF (IN)	TF (IN)	TW (IN)	Location
BW24X24X4X3	24"	24"	4"	3"	Level LB to LLD, Grid C.1, between Grids 16.5 and 16.0
BW24X24X4X3	24"	24"	4"	3"	Level LB to LLD, Grid C.1, between Grids 16.5 and 17.0
BW24X24X4X3	24"	24"	4"	3"	Level LB to 1., Grid D.7, between Grids 15.0 and 15.4
BW36X30X4X4	36"	30"	4"	4"	Level LD, Grid 17.0, between Grids C.1 and C.9
BW28X18X6X4	28"	18"	6"	4"	Level 1. to 3., Grid C.9, between Grids 15.5 and 15.0
BW36X24X6X5	36"	24"	6"	5"	Level 3., Grid C.1, between Grids 16.0 and 17.0
BW24.625X24X6X4	24.625"	24"	6"	4"	Level 5. to 6., Grid F.9, between Grids 14.0 and 13.8
BW42X18X5X2.5	42"	18"	5"	2.5"	Level 5., between Grids A.6 and B.0 and 17.0 and 16.0
BW42X30X6X4	42"	30"	6"	4"	Level 5., between Grids B.0 and C.1 and 15.0 and 13.9
BW23X18X5.5X4	23"	18"	5.5"	4"	Level 5., between Grids K.0 and and and 10.0
BW42X24X6X3	42"	24"	6"	3"	Level 5., Grid A.0, between Grids 14.8 and 16.3
BW42X24X6X3	42"	24"	6"	3"	Level 5., Grid B.0, between Grids 14.0 and 15.0
BW42X24X4X3	42"	24"	4"	3"	Level 5., Grid C.1, between Grids 14.0 and 15.0
BW42X24X4X3	42"	24"	4"	3"	Level 5., Grid C.9, between Grids 14.0 and 15.0
BW42X24X7X3	42"	24"	7"	3"	Level 5., Grid D.8, between Grids 14.0 and 15.0
BW42X24X6X3	42"	24"	6"	3"	Level 5., Grid E.6, between Grids 14.0 and 15.0
BW42X24X4X3	42"	24"	4"	3"	Level 5., Grid F.9, between Grids 14.0 and 15.0
BW24.625X24X6X4	24.625"	24"	6"	4"	Level 6. to 7., Grid F.9, between Grids 14.3 and 14.0
BW23X18X5.5X4	23"	18"	5.5"	4"	Level 6., between Grids K.0 and and and 10.0
BW24.625X24X6X4	24.625"	24"	6"	4"	Level 7. to M7., Grid F.9, between Grids 14.4 and 14.3
BW23X18X5.5X4	23"	18"	5.5"	4"	Level 7., between Grids K.0 and and and 10.0
BW24.625X24X6X4	24.625"	24"	6"	4"	Level 8. to M8., Grid E.6, between Grids 14.7 and 14.5
BW24.625X24X6X4	24.625"	24"	6"	4"	Level 8. to M8., Grid F.9, between Grids 14.7 and 14.5
BW23X18X5.5X4	23"	18"	5.5"	4"	Level 8., between Grids K.0 and and and 10.0
BW24.625X24X6X4	24.625"	24"	6"	4"	Level 10 to 10, Grid E.6, between Grids 15.0 and 14.7
BW24.625X24X6X4	24.625"	24"	6"	4"	Level 10 to 10, Grid F.9, between Grids 15.0 and 14.7
BW23X18X5.5X4	23"	18"	5.5"	4"	Level 10, between Grids K.0 and and and 10.0
BW42X30X7X4	42"	30"	7"	4"	Level 10, Grid A.0, between Grids 13.5 and 14.0
BW42X30X4X3-A	42"	30"	4"	3"	Level 10, Grid B.0, between Grids 12.9 and 13.9
BW42X18X5X2.5	42"	18"	5"	2.5"	Level 10, Grid B.0, between Grids 14.0 and 15.0
BW36X24X5X4	36"	24"	5"	4"	Level 10, Grid B.0, between Grids 15.0 and 16.0
BW42X18X5X2.5	42"	18"	5"	2.5"	Level 10, Grid C.0, between Grids 13.9 and 12.9
BW42X24X4X3	42"	24"	4"	3"	Level 10, Grid D.0, between Grids 12.9 and 13.9
BW42X24X5X3	42"	24"	5"	3"	Level 10, Grid E.0, between Grids 12.9 and 13.9
BW28X24X4X2	28"	24"	4"	2"	Level 21 to 22, Grid A.0, between Grids 15.1 and 16.0
BW28X20X6X2+2"SP	28"	20"	6"	2"	Level 21 to 22, Grid B.0, between Grids 16.5 and 17.0
BW28X24X4X2	28"	24"	4"	2"	Level 21 to 22, Grid H.6, between Grids 13.2 and 12.9
BW28X28X4X4	28"	28"	4"	4"	Level 21 to 22, Grid H.6, between Grids 13.9 and 14.0
BW28X24X4X2	28"	24"	4"	2"	Level 21 to 22, Grid 17.0, between Grids A.4 and B.0
BW28X24X4X2	28"	24"	4"	2"	Level 21 to 22, Grid 17.0, between Grids B.0 and C.1
BW24X24X4.5X4	24"	24"	4.5"	4"	Level 21 to 22, Grid 13.9, between Grids C.1 and D.0
BW26X28X6X3	26"	28"	6"	3"	Level 21 to 22, Grid 15.0, between Grids D.7 and E.1
BW28X24X4X2	28"	24"	4"	2"	Level 21 to 22, Grid 17.0, between Grids E.6 and E.1
BW24X24X4.5X4	24"	24"	4.5"	4"	Level 21 to 22, Grid 15.0, between Grids F.2 and F.9
BW28X24X4X2	28"	24"	4"	2"	Level 21 to 22, Grid 17.0, between Grids H.6 and H.7
BW38X16X3.5X1.5	38"	16"	3.5"	1.5"	Level 21, Grid A.0, between Grids 15.1 and 16.0
BW38X16X2.5X1	38"	16"	2.5"	1"	Level 21, Grid A.0, between Grids 16.0 and 16.5
BW38X24X4.5X2	38"	24"	4.5"	2"	Level 21, Grid B.0, between Grids 13.0 and 14.0
BW38X24X4.5X2	38"	24"	4.5"	2"	Level 21, Grid B.0, between Grids 14.0 and 15.0
BW38X18X6X4	38"	18"	6"	4"	Level 21, Grid 16.0, between Grids A.0 and B.0
BW38X18X6X4	38"	18"	6"	4"	Level 21, Grid 16.0, between Grids B.0 and C.1
BW36X18X4X1.5	36"	18"	4"	1.5"	Level 21, Grid 17.0, between Grids B.0 and C.1
BW38X18X6X2	38"	18"	6"	2"	Level 21, Grid 17.0, between Grids E.8 and F.9
BW24X24X4X3	24"	24"	4"	3"	Level 22 to 23, Grid B.0, between Grids 16.5 and 16.0
BW38X18X2.5X1	38"	18"	2.5"	1"	Level 22, Grid C.1, between Grids 14.0 and 15.0
BW38X18X2.5X1	38"	18"	2.5"	1"	Level 22, Grid 16.0, between Grids D.8 and E.8
BW36X18X3.5X1.5	36"	18"	3.5"	1.5"	Level 22, Grid 17.0, between Grids F.9 and G.6
BW36X18X3.5X1.5	36"	18"	3.5"	1.5"	Level 22, Grid 17.0, between Grids G.6 and H.7
BW38X18X6X6	38"	18"	6"	6"	Level 22, Grid 14.0, between Grids H.0 and J.0
BW38X20X6X4	38"	20"	6"	4"	Level 22, Grid 14.9, between Grids H.0 and J.0
BW36X18X3.5X1.5	36"	18"	3.5"	1.5"	Level 22, Grid 17.1, between Grids H.7 and K.0
BW26X18X4X2	26"	18"	4"	2"	Level 22, Grid 14.0, between Grids J.0 and K.0
BW26X20X4X3	26"	20"	4"	3"	Level 22, Grid 14.9, between Grids J.0 and K.0
BW26X18X4X2	26"	18"	4"	2"	Level 22, Grid 14.0, between Grids K.0 and K.9
BW26X18X4X3	26"	18"	4"	3"	Level 22, Grid 14.9, between Grids K.0 and L.0
BW24X24X4X3	24"	24"	4"	3"	Level 23 to 24, Grid B.0, between Grids 16.5 and 16.0
BW36X16X2X1	36"	16"	2"	1"	Level 23, Grid F.2, between Grids 14.0 and 15.0
BW24X24X4X3	24"	24"	4"	3"	Level 24 to 25, Grid B.0, between Grids 15.2 and 16.0
BW24.625X18X6X4	24.625"	18"	6"	4"	Level 24, between Grids E.1 and and and 16.0
BW21X16X1.5X1.5	21"	16"	1.5"	1.5"	Level 26, Grid 15.0, between Grids D.1 and E.1
BW21X16X1.5X1.5	21"	16"	1.5"	1.5"	Level 27, Grid 15.0, between Grids D.1 and E.1
BW21X16X1.5X1.5	21"	16"	1.5"	1.5"	Level 28, Grid 15.0, between Grids D.1 and E.1
BW21X16X1.5X1.5	21"	16"	1.5"	1.5"	Level 29, Grid 15.0, between Grids D.1 and E.1
BW21X16X1.5X1.5	21"	16"	1.5"	1.5"	Level 30, Grid 15.0, between Grids D.1 and E.1
BW28X14X2.5X0.75	28"	14"	2.5"	0.75"	Level 31, Grid 13.9, between Grids E.1 and F.9
BW28X14X2.5X0.75	28"	14"	2.5"	0.75"	Level 32, Grid 13.9, between Grids E.1 and F.9
BW28X14X2.5X0.75	28"	14"	2.5"	0.75"	Level 33, Grid 13.9, between Grids E.1 and F.9
BW28X14X2.5X0.75	28"	14"	2.5"	0.75"	Level 34, Grid 13.9, between Grids E.1 and F.9
BW24X24X3X2	24"	24"	3"	2"	Level 39 to 40, between Grids G.7 and F.2 and 14.0 and 13.9
BW24X24X3X2	24"	24"	3"	2"	Level 39 to 40, Grid B.0, between Grids 14.5 and 13.9
BW24X24X3X2	24"	24"	3"	2"	Level 39 to 40, Grid B.0, between Grids 14.5 and 15.0
BW24X24X6X2	24"	24"	6"	2"	Level 39 to 40, Grid C.1, between Grids 12.9 and 13.9
BW24X24X3X2	24"	24"	3"	2"	Level 39 to 40, Grid D.1, between Grids 16.0 and 17.0
BW25X18X8X4+2"SP	25"	18"	8"	4"	Level 39 to 40, Grid E.1, between Grids 14.5 and 13.9
BW28X28X5X2	28"	28"	5"	2"	Level 39 to 40, Grid E.1, between Grids 12.9 and 13.9
BW24X24X6X2	24"	24"	6"	2"	Level 39 to 40, Grid E.1, between Grids 16.0 and 17.0
BW24X24X3X2	24"	24"	3"	2"	Level 39 to 40, Grid F.2, between Grids 14.5 and 15.0
BW24X24X5X3	24"	24"	5"	3"	Level 39 to 40, Grid 13.9, between Grids A.0 and B.0
BW24X24X3X2	24"	24"	3"	2"	Level 39 to 40, Grid 15.0, between Grids A.0 and B.0
BW24X24X7X2	24"	24"	7"	2"	Level 39 to 40, Grid 13.9, between Grids C.1 and B.5
BW24X16X4X1	24"	16"	4"	1"	Level 39 to 40, Grid 16.0, between Grids C.1 and B.5
BW24X24X5X2	24"	24"	5"	2"	Level 39 to 40, Grid 13.9, between Grids E.1 and E.7
BW25X18X5X1	25"	18"	5"	1"	Level 39, between Grids F.2 and G.7 and 15.9 and 16.0
BW33X24X7X2	33"	24"	7"	2"	Level 39, Grid B.0, between Grids 13.0 and 14.0
BW33X22X6X1	33"	22"	6"	1"	Level 39, Grid B.0, between Grids 14.0 and 15.0
BW33X20X6X2	33"	20"	6"	2"	Level 39, Grid B.0, between Grids 15.0 and 16.0
BW33X24X6X1	33"	24"	6"	1"	Level 39, Grid B.0, between Grids 16.0 and 17.0
BW25X18X5X1	25"	18"	5"	1"	Level 39, Grid C.1, between Grids 13.0 and 14.0
BW25X18X4X1	25"	18"	4"	1"	Level 39, Grid C.1, between Grids 14.0 and 15.0
BW25X18X3X1	25"	18"	3"	1"	Level 39, Grid C.1, between Grids 15.0 and 16.0
BW25X18X4X1	25"	18"	4"	1"	Level 39, Grid C.1, between Grids 16.0 and 17.0
BW25X22X4X1	25"	22"	4"	1"	Level 39, Grid D.1, between Grids 13.0 and 14.0
BW25X18X5X2+1"SP	25"	18"	5"	2"	Level 39, Grid D.1, between Grids 14.0 and 15.0
BW25X18X3X1	25"	18"	3"	1"	Level 39, Grid D.1, between Grids 15.0 and 16.0
BW25X18X3X1	25"	18"	3"	1"	Level 39, Grid D.1, between Grids 16.0 and 17.0
BW25X20X5X1	25"	20"	5"	1"	Level 39, Grid E.1, between Grids 13.0 and 14.0
BW25X18X7X4+3"SP	25"	18"	7"	4"	Level 39, Grid E.1, between Grids 14.0 and 15.0
BW25X18X5X1	25"	18"	5"	1"	Level 39, Grid E.1, between Grids 16.0 and 17.0
BW25X18X5X1	25"	18"	5"	1"	Level 39, Grid F.2, between Grids 13.0 and 14.0
BW25X18X4X1	25"	18"	4"	1"	Level 39, Grid F.2, between Grids 14.0 and 15.0

Shape	D (IN)	BF (IN)	TF (IN)	TW (IN)	Location
BW25X18X3X1	25"	18"	3"	1"	Level 39, Grid F.2, between Grids 15.0 and 16.0
BW25X18X2X1	25"	18"	2"	1"	Level 39, Grid F.2, between Grids 16.0 and 17.0
BW25X20X6X1	25"	20"	6"	1"	Level 39, Grid 13.9, between Grids A.0 and B.0
BW25X18X3X1	25"	18"	3"	1"	Level 39, Grid 15.0, between Grids A.0 and B.0
BW25X24X6X1	25"	24"	6"	1"	Level 39, Grid 16.0, between Grids A.0 and B.0
BW25X20X6X1	25"	20"	6"	1"	Level 39, Grid 13.9, between Grids B.0 and C.1
BW25X18X2X1	25"	18"	2"	1"	Level 39, Grid 15.0, between Grids B.0 and C.1
BW25X19X5X1	25"	19"	5"	1"	Level 39, Grid 16.0, between Grids B.0 and C.1
BW25X20X3X2	25"	20"	3"	2"	Level 39, Grid 13.9, between Grids C.1 and D.1
BW25X16X1X1	25"	16"	1"	1"	Level 39, Grid 15.0, between Grids C.1 and D.1
BW25X16X3.5X1	25"	16"	3.5"	1"	Level 39, Grid 16.0, between Grids C.1 and D.1
BW38X19X3X2	38"	19"	3"	2"	Level 39, Grid 12.9, between Grids D.0 and E.0
BW25X16X2X1	25"	16"	2"	1"	Level 39, Grid 15.0, between Grids D.1 and E.1
BW25X18X4X1	25"	18"	4"	1"	Level 39, Grid 16.0, between Grids D.1 and E.1
BW25X20X5X3	25"	20"	5"	3"	Level 39, Grid 13.9, between Grids E.1 and F.9
BW25X19X4X2	25"	19"	4"	2"	Level 39, Grid 15.0, between Grids E.1 and F.9
BW25X18X4X1	25"	18"	4"	1"	Level 39, Grid 16.0, between Grids E.1 and F.9
BW25X22X4X1	25"	22"	4"	1"	Level 39, Grid 13.9, between Grids F.2 and G.7
BW25X18X3X1	25"	18"	3"	1"	Level 39, Grid 15.0, between Grids F.2 and G.7
BW34X22X6X2	34"	22"	6"	2"	Level 40, Grid B.0, between Grids 14.0 and 15.0
BW34X19X6X1	34"	19"	6"	1"	Level 40, Grid B.0, between Grids 15.0 and 16.0
BW34X18X7X4+3"SP	34"	18"	7"	4"	Level 40, Grid D.1, between Grids 14.0 and 15.0
BW34X18X6X1	34"	18"	6"	1"	Level 40, Grid E.1, between Grids 14.0 and 15.0
BW40X24X8X2	40"	24"	8"	2"	Level 40, Grid F.1, between Grids 15.0 and 16.0
BW34X19X5X1	34"	19"	5"	1"	Level 40, Grid 13.9, between Grids B.0 and C.1
BW34X20X7X2	34"	20"	7"	2"	Level 40, Grid 16.0, between Grids B.0 and C.1
BW34X16X6X3	34"	16"	6"	3"	Level 40, Grid 16.0, between Grids C.1 and D.1
BW34X18X3.5X1	34"	18"	3.5"	1"	Level 40, Grid 16.0, between Grids D.1 and E.1
BW34X19X3X2	34"	19"	3"	2"	Level 40, Grid 13.9, between Grids E.1 and F.9
BW28X20X5X3.5	28"	20"	5"	3.5"	Level 41, Grid B.0, between Grids 15.0 and 16.0
BW26.725X18X3X2	26.725"	18"	3"	2"	Level 41, Grid C.1, between Grids 15.0 and 16.0
BW26X18X3X2	26"	18"	3"	2"	Level 41, Grid D.1, between Grids 15.0 and 16.0
BW28X18X4X2	28"	18"	4"	2"	Level 41, Grid E.1, between Grids 15.0 and 16.0
BW28X20X4X3	28"	20"	4"	3"	Level 42, Grid B.0, between Grids 15.0 and 16.0
BW22X18X2X2	22"	18"	2"	2"	Level 52, Grid 13.9, between Grids C.1 and D.1
BW22X18X2X2	22"	18"	2"	2"	Level 53, Grid 13.9, between Grids C.1 and D.1
BW28X28X5X2	28"	28"	5"	2"	Level 60 to 61, Grid B.0, between Grids 13.9 and 12.9
BW24X24X6X2	24"	24"	6"	2"	Level 60 to 61, Grid B.0, between Grids 14.3 and 13.9
BW24X24X7X2	24"	24"	7"	2"	Level 60 to 61, Grid B.0, between Grids 14.7 and 14.3
BW24X18X6X2+2"SP	24"	18"	6"	2"	Level 60 to 61, Grid C.1, between Grids 14.3 and 13.9
BW24X24X3X2	24"	24"	3"	2"	Level 60 to 61, Grid C.1, between Grids 12.9 and 13.9
BW24X18X7X3+2"SP	24"	18"	7"	3"	Level 60 to 61, Grid C.1, between Grids 14.3 and 14.7
BW18X18X4X3	18"	18"	4"	3"	Level 60 to 61, Grid C.1, between Grids 15.5 and 16.0
BW24X24X4X3	24"	24"	4"	3"	Level 60 to 61, Grid C.1, between Grids 16.0 and 17.0
BW24X18X8X8+2"SP	24"	18"	8"	8"	Level 60 to 61, Grid D.1, between Grids 14.3 and 13.9
BW24X24X3X2	24"	24"	3"	2"	Level 60 to 61, Grid D.1, between Grids 12.9 and 13.9
BW24X18X8X8+2"SP	24"	18"	8"	8"	Level 60 to 61, Grid D.1, between Grids 14.3 and 14.7
BW24X24X7X3+2"SP	24"	24"	7"	3"	Level 60 to 61, Grid D.1, between Grids 16.0 and 17.0
BW26X26X5X2	26"	26"	5"	2"	Level 60 to 61, Grid E.1, between Grids 12.9 and 13.9
BW24X18X8X8+2"SP	24"	18"	8"	8"	Level 60 to 61, Grid E.1, between Grids 14.5 and 14.8
BW24X24X4X3	24"	24"	4"	3"	Level 60 to 61, Grid 15.0, between Grids A.0 and B.0
BW24X24X5X2	24"	24"	5"	2"	Level 60 to 61, Grid 13.9, between Grids B.0 and B.7
BW24X18X5X4	24"	18"	5"	4"	Level 60 to 61, Grid 15.0, between Grids C.1 and B.5
BW16X16X3X1	16"	16"	3"	1"	Level 60 to 61, Grid 16.0, between Grids D.1 and C.6
BW24X24X3X2	24"	24"	3"	2"	Level 60 to 61, Grid 15.0, between Grids E.1 and H.7
BW24X24X6X2	24"	24"	6"	2"	Level 60 to 61, Grid 13.9, between Grids H.7 and E.1
BW25X18X4X1	25"	18"	4"	1"	Level 60, between Grids E.1 and H.7 and 15.9 and 16.0
BW33X24X4X1	33"	24"	4"	1"	Level 60, Grid B.0, between Grids 13.0 and 14.0
BW33X24X5X3	33"	24"	5"	3"	Level 60, Grid B.0, between Grids 14.0 and 15.0
BW33X20X4X1	33"	20"	4"	1"	Level 60, Grid B.0, between Grids 15.0 and 16.0
BW33X24X6X2	33"	24"	6"	2"	Level 60, Grid B.0, between Grids 16.0 and 17.0
BW25X18X2.5X1	25"	18"	2.5"	1"	Level 60, Grid C.1, between Grids 13.0 and 14.0
BW25X18X3.5X1	25"	18"	3.5"	1"	Level 60, Grid C.1, between Grids 14.0 and 15.0
BW25X18X1.5X1	25"	18"	1.5"	1"	Level 60, Grid C.1, between Grids 15.0 and 16.0
BW25X18X4X1	25"	18"	4"	1"	Level 60, Grid C.1, between Grids 16.0 and 17.0
BW25X18X3X1	25"	18"	3"	1"	Level 60, Grid D.1, between Grids 13.0 and 14.0
BW25X18X4X1	25"	18"	4"	1"	Level 60, Grid D.1, between Grids 14.0 and 15.0
BW25X18X5X2	25"	18"	5"	2"	Level 60, Grid D.1, between Grids 16.0 and 17.0
BW25X18X5X2	25"	18"	5"	2"	Level 60, Grid E.1, between Grids 13.0 and 14.0
BW25X18X5X1	25"	18"	5"	1"	Level 60, Grid E.1, between Grids 14.0 and 15.0
BW25X18X3.5X1	25"	18"	3.5"	1"	Level 60, Grid 13.9, between Grids A.0 and B.0
BW25X20X3X1	25"	20"	3"	1"	Level 60, Grid 15.0, between Grids A.0 and B.0
BW25X24X4X1	25"	24"	4"	1"	Level 60, Grid 16.0, between Grids A.0 and B.0
BW25X20X4X2	25"	20"	4"	2"	Level 60, Grid 13.9, between Grids B.0 and C.1
BW25X18X2X1	25"	18"	2"	1"	Level 60, Grid 15.0, between Grids B.0 and C.1
BW25X18X3X1	25"	18"	3"	1"	Level 60, Grid 16.0, between Grids B.0 and C.1
BW38X18X1.5X2.5	38"	18"	1.5"	2.5"	Level 60, Grid 17.1, between Grids B.9 and C.9
BW38X18X1.5X1.5	38"	18"	1.5"	1.5"	Level 60, Grid 12.9, between Grids C.0 and D.0
BW25X18X2.5X1	25"	18"	2.5"	1"	Level 60, Grid 13.9, between Grids C.1 and D.1
BW25X18X1.5X1	25"	18"	1.5"	1"	Level 60, Grid 15.0, between Grids C.1 and D.1
BW25X16X1.5X1	25"	16"	1.5"	1"	Level 60, Grid 16.0, between Grids C.1 and D.1
BW38X18X3X3	38"	18"	3"	3"	Level 60, Grid 17.1, between Grids C.9 and E.0
BW25X18X6X2	25"	18"	6"	2"	Level 60, Grid 13.9, between Grids D.1 and E.1
BW25X18X2.5X1	25"	18"	2.5"	1"	Level 60, Grid 15.0, between Grids D.1 and E.1
BW25X18X3X1	25"	18"	3"	1"	Level 60, Grid 16.0, between Grids D.1 and E.1
BW25X18X2.5X1	25"	18"	2.5"	1"	Level 60, Grid 15.0, between Grids E.1 and H.7
BW24X24X4X3	24"	24"	4"	3"	Level 61 to 62, Grid B.0, between Grids 15.2 and 16.0
BW34X18X3.5X1	34"	18"	3.5"	1"	Level 61, between Grids C.1 and D.1 and 13.9 and 14.0
BW34X20X4X1	34"	20"	4"	1"	Level 61, Grid B.0, between Grids 14.0 and 15.0
BW34X20X4X1	34"	20"	4"	1"	Level 61, Grid B.0, between Grids 15.0 and 16.0
BW34X18X3.5X1	34"	18"	3.5"	1"	Level 61, Grid C.1, between Grids 14.0 and 15.0
BW34X18X4X1	34"	18"	4"	1"	Level 61, Grid D.1, between Grids 14.0 and 15.0
BW34X18X8X4	34"	18"	8"	4"	Level 61, Grid D.1, between Grids 15.0 and 16.0
BW34X18X6X3	34"	18"	6"	3"	Level 61, Grid E.1, between Grids 14.0 and 15.0
BW34X18X2.5X1	34"	18"	2.5"	1"	Level 61, Grid 15.0, between Grids B.0 and C.1
BW34X18X4X1	34"	18"	4"	1"	Level 61, Grid 16.0, between Grids B.0 and C.1
BW34X18X1X1	34"	18"	1"	1"	Level 61, Grid 15.0, between Grids C.1 and D.1
BW34X16X3.5X1	34"	16"	3.5"	1"	Level 61, Grid 16.0, between Grids C.1 and D.1
BW34X18X3.5X1	34"	18"	3.5"	1"	Level 61, Grid 16.0, between Grids D.1 and E.1
BW17X16.81X3.21X2.02	17"	16.81"	3.21"	2.02"	Level 63 to 64, Grid B.0, between Grids 15.2 and 16.0
BW16X16X3X2	16"	16"	3"	2"	Level 65 to 66, Grid D.1, between Grids 15.0 and 16.0
BW18.7X16X3.04X1.88	18.7"	16"	3.04"	1.88"	Level 67, Grid 15.0, between Grids C.1 and C.8
BW40X16X2.5X1.5	40"	16"	2.5"	1.5"	Level RF, Grid B.0, between Grids 15.0 and 16.0
BW40X16X2.5X1.5	40"	16"	2.5"	1.5"	Level RF, Grid C.1, between Grids 14.0 and 15.0
BW40X16X2.5X1.5	40"	16"	2.5"	1.5"	Level RF, Grid C.1, between Grids 15.0 and 16.0
BW40X16X2.5X1.5	40"	16"	2.5"	1.5"	Level RF, Grid C.8, between Grids 15.0 and 16.0
BW41X18X3X2	41"	18"	3"	2"	Level RF, Grid 14.7, between Grids B.0 and C.1
BW40X16X2.5X1.5	40"	16"	2.5"	1.5"	Level RF, Grid 15.0, between Grids B.0 and C.1
BW40X16X2.5X1.5	40"	16"	2.5"	1.5"	Level RF, Grid 16.0, between Grids B.0 and C.1
BW40X16X2.5X1.5	40"	16"	2.5"	1.5"	Level RF, Grid 14.7, between Grids C.1 and C.8

THIS DRAWING LISTS EACH LOCATION OF A SECTION IN S5-3006 CALLED OUT AS 'ALL LOCATIONS'. REFER TO S5-3006 FOR THE REQUIRED WELD AT THESE LOCATIONS.

Damian Titus
Buildings
APPROVED
Under Directive 2 of 1975
AMENDED APPLICATION
NYC Development Hub

DEPT OF BLDGS 121186251 Job Number
ES443129800 Scan Code

HUDSON YARDS - RETAIL PODIUM AND TOWER A

500 WEST 33RD STREET
New York, NY

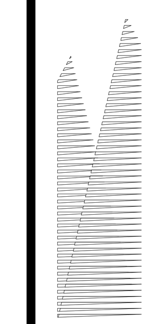

Client
Related Companies
60 Columbus Circle
New York, NY 10023
TEL: 212.801.1000 FAX: 212.801.1048

Oxford Properties Group
320 Park Avenue, 17th Floor
New York, NY 10022
TEL: 212.986.7514 FAX: 212.986.7510

Architect
Kohn Pedersen Fox Associates
11 West 42nd Street
New York, New York 10036
TEL: 212.977.6500 FAX: 212.956.2526

Structural Engineer
Thornton Tomasetti, Inc.
51 Madison Avenue
New York, New York 10010
TEL: 917.661.7800 FAX: 718.661.7801

Mechanical, Electrical, Plumbing, Fire Protection
Jaros Baum & Bolles Consulting Engineers
80 Pine Street
New York, NY 10013
TEL: 212.530.9300 FAX: 212.269.5894

Retail Interior Design & Planning
Elkus-Manfredi
300 A Street
Boston, MA 02210
TEL: 617.426.1300

No.	Description	Date
1	D.O.B AMENDMENT #2	10/15/2016

Key Plan

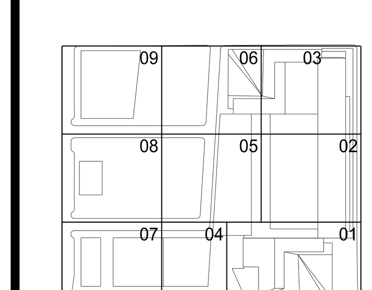

Issue Date 10/15/2016
Project No. N11328.00
Drawn By
Sheet Number

STATE OF NEW YORK
MICHAEL J. SQUARZINI
LICENSED PROFESSIONAL ENGINEER

HYE-TA-S5-3007

Drawing Title

BW SHAPE SUBSTITUTION LOCATIONS

Drawing Number
S5-3007
B-Scan Drawing Number
S-756.00

SHEET 374 OF 443

© 2013 KOHN PEDERSEN FOX ASSOCIATES PC. All rights reserved.

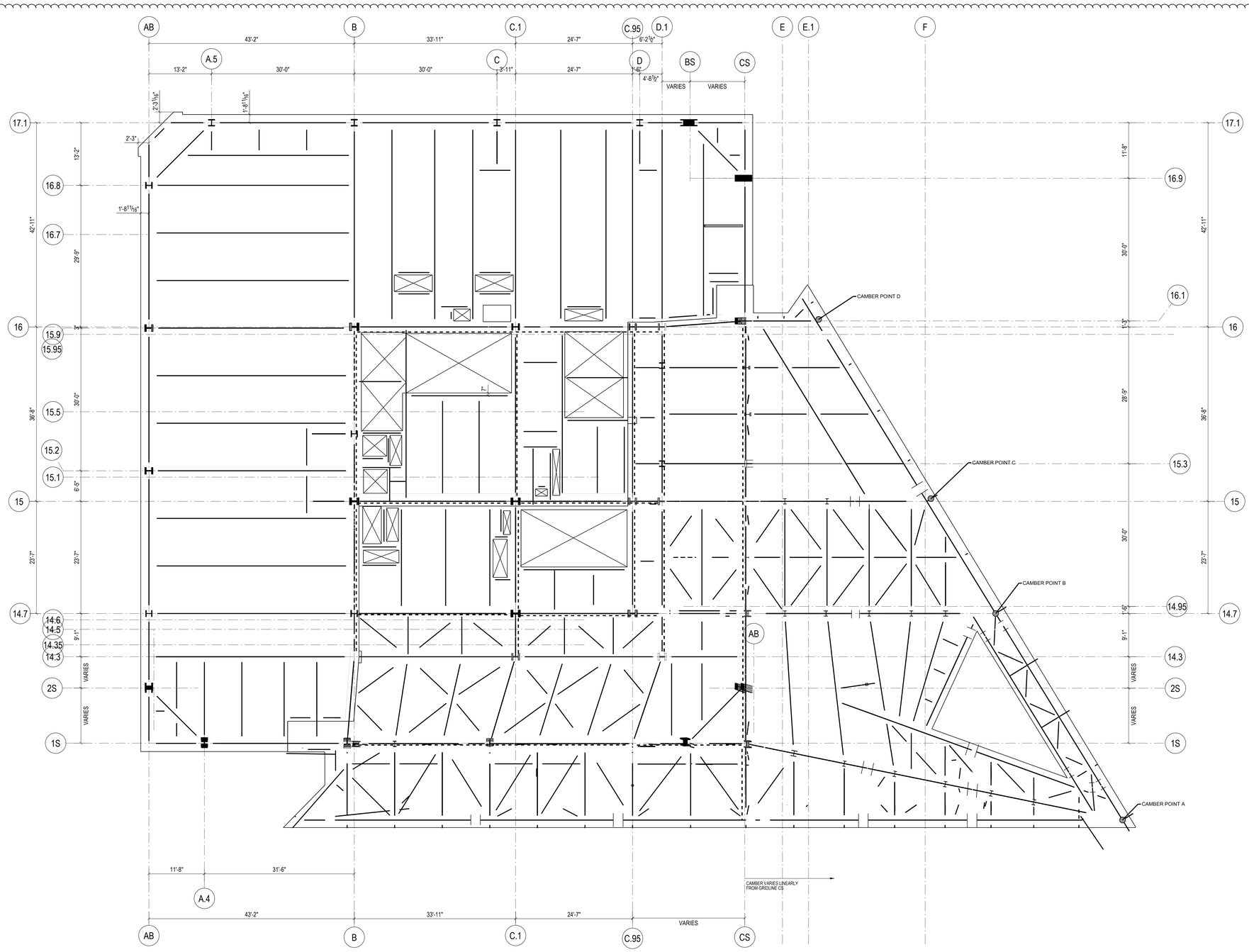

POINT	CAMBER
A	+3- ½"
B	+2- 5/16"
C	+1-11/16"
D	+5/8"

CAMBER SCHEDULE

STEEL BEAM LEGEND

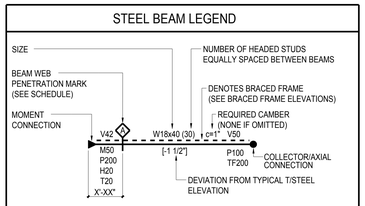

V	INDICATES FACTORED VERTICAL SHEAR IN KIPS (SEE SCHEDULE IF OMITTED)
M	INDICATES FACTORED END MOMENT IN KIP-FEET (SEE SCHEDULE IF OMITTED)
P	INDICATES FACTORED END AXIAL FORCE IN KIPS
H	INDICATES FACTORED HORIZONTAL SHEAR FORCE IN KIPS
T	INDICATES TORSIONAL MOMENT IN KIP-FEET
TF	INDICATES AXIAL FORCE TRANSFERRED THROUGH THE CONNECTION JOINT IN KIPS

STEEL BEAM LEGEND
NOT TO SCALE

SHEET NOTES:

1. T/STRUCTURAL SLAB EL+ 0" UON THUS:
   X - INDICATES CHANGE IN T/STRUCTURAL SLAB ELEVATION
2. T/STEEL EL+ 0" UON
3. INDICATES DECK SPAN DIRECTION. SEE SCHEDULE ON S5-3001
4. FOR ADDITIONAL INFORMATION REFER TO THE FOLLOWING DRAWINGS:

DRAWING LISTS, GENERAL NOTES, AND LOADING DIAGRAMS	S0 SERIES DRAWINGS
LATERAL SYSTEM ELEVATIONS, OVERALL BUILDING ELEVATIONS	S2 SERIES DRAWINGS
SECTIONS AND DETAILS	S3 SERIES DRAWINGS
TYPICAL DETAILS	S4 SERIES DRAWINGS
SCHEDULES	S5 SERIES DRAWINGS
STEEL CONNECTION DETAILS	S7 SERIES DRAWINGS

TYPICAL SHEET NOTES
NOT TO SCALE

5. SYMBOLS:
   - INDICATES MOMENT CONNECTION
   - INDICATES DEEP BEAM BOTTOM FLANGE BRACING CONNECTION SEE DETAIL 9/S4-2003
   - INDICATES FULL HEIGHT FITTED STIFFENER CONNECTION SEE DETAIL 7/S4-2003
   - INDICATES KICKER AT SPANDREL BEAM CONNECTION. SEE DETAIL 8/S4-2003
   - UP — INDICATES SLOPE IN TOP OF SLAB
   - INDICATES CHANGE IN SLAB THICKNESS
   - INDICATES SLOPING COLUMN DIRECTION
   - INDICATES THICKENED SLAB
   - INDICATES TOPPING SLAB SEE ARCH. DRAWING FOR TOP OF TOPPING SLAB ELEVATION
   - INDICATES THE BEAM IS SUPPORTED BY BRACING

6. NOTATIONS:

CA/CB	INDICATES COLUMN ABOVE/BELOW. COMPRESSION AXIAL FORCE IN COLUMN INDICATED WHERE APPLICABLE. SEE DETAILS 1 & 2/S4-2002
PA/PB	INDICATES POST ABOVE/BELOW
DB	INDICATES HSS8X4X3/8 ELEVATOR DIVIDER BEAM (NOT FIREPROOFED)
HA/HB	INDICATES HANGER ABOVE/BELOW. TENSION AXIAL FORCE IN HANGER BELOW INDICATED WHERE APPLICABLE. SEE DETAIL 3/S4-2002
MF	INDICATES LATERAL MOMENT FRAME SEE MOMENT FRAME ELEVATIONS FOR BEAM INFORMATION AND CONNECTION FORCES
PG	INDICATES PLATE GIRDER TYPE. SEE SCHEDULE
TC	INDICATES TORSIONAL CONNECTION FOR STAIR. SEE DETAIL 1/S4-2003
TR	INDICATES COLUMN FROM ABOVE TRANSFERS. COMPRESSION AXIAL FORCE IN COLUMN INDICATED WHERE APPLICABLE. SEE DETAIL 1/S4-2002
BF	INDICATES BRACED FRAME. SEE ELEVATIONS FOR BEAM INFORMATION AND CONNECTION FORCES
PBR XxY	INDICATES X-INCH THICK BY Y-INCH WIDE HORIZONTAL PLATE BRACE. SEE DETAIL 1/S4-2030
TRUSS TC	INDICATES TRUSS TOP CHORD
TRUSS BC	INDICATES TRUSS BOTTOM CHORD
CO (X)	INDICATES COPED BEAM END. SEE COPE SCHEDULE ON DRAWING S5-3001
TCC	INDICATES BOTTOM FLANGE CONNECTION AT SPANDREL BEAM SEE DETAIL 7/S4-2020
TCS	INDICATES TORSIONAL CONNECTION AND FULL HEIGHT FITTED BEAM STIFFENER SEE DETAIL 1/S4-2003

TYPICAL SHEET NOTES (SYMBOLS)
NOT TO SCALE

Damian Titus
Buildings
APPROVED
Under Directive 2 of 1975
AMENDED APPLICATION
Date: 05/01/2017
NYC Development Hub

0 4' 8' 16'

HUDSON YARDS - RETAIL PODIUM AND TOWER A

500 WEST 33RD STREET
New York, NY

Client
Related Companies
60 Columbus Circle
New York, NY 10023
TEL: 212.801.1000 FAX: 212.801.1048

Oxford Properties Group
320 Park Avenue, 17th Floor
New York, NY 10022
TEL: 212.986.7514 FAX: 212.986.7510

Architect
Kohn Pedersen Fox Associates
11 West 42nd Street
New York, New York 10036
TEL: 212.977.6500 FAX: 212.956.2526

Structural Engineer
Thornton Tomasetti, Inc.
51 Madison Avenue
New York, New York 10010
TEL: 917.661.7800 FAX: 718.661.7801

Mechanical, Electrical, Plumbing, Fire Protection
Jaros Baum & Bolles Consulting Engineers
80 Pine Street
New York, NY 10013
TEL: 212.530.9300 FAX: 212.269.5894

Retail Interior Design & Planning
Elkus-Manfredi
300 A Street
Boston, MA 02210
TEL: 617.426.1300

No.	Description	Date
2	D.O.B AMENDMENT #2	10/15/2016
1	D.O.B BUILDING PERMIT FILING	12/10/2014

Key Plan

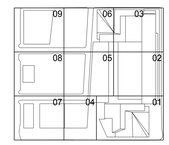

Issue Date 12/10/2014
Project No. N11328.00
Drawn By
Sheet Number

STATE OF NEW YORK — DAMIAN TITUS — LICENSED PROFESSIONAL ENGINEER

HYE-TA-S6-5001
Drawing Title

OBSERVATION DECK* T/STEEL ELEVATIONS

Drawing Number
S6-5001
If Non Drawing Number
S-800.01

© 2013 KOHN PEDERSEN FOX ASSOCIATES PC. All rights reserved.

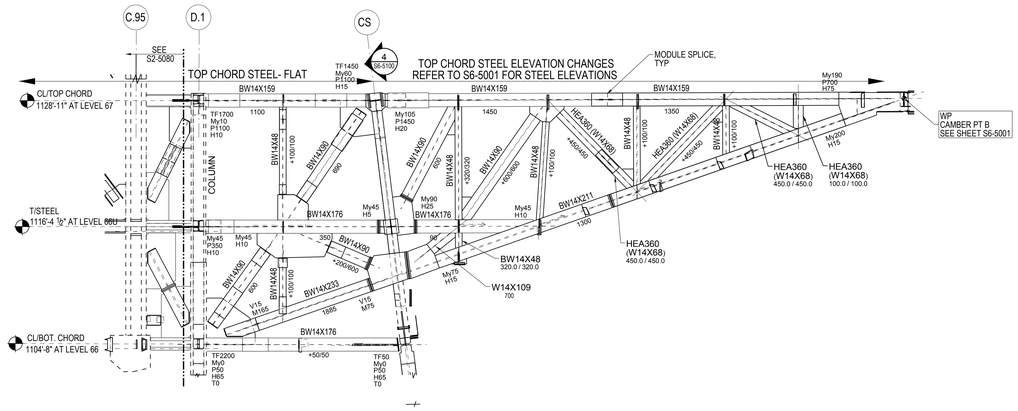

1 OB DECK TRUSS ELEV - GRID 14.7
NOT TO SCALE

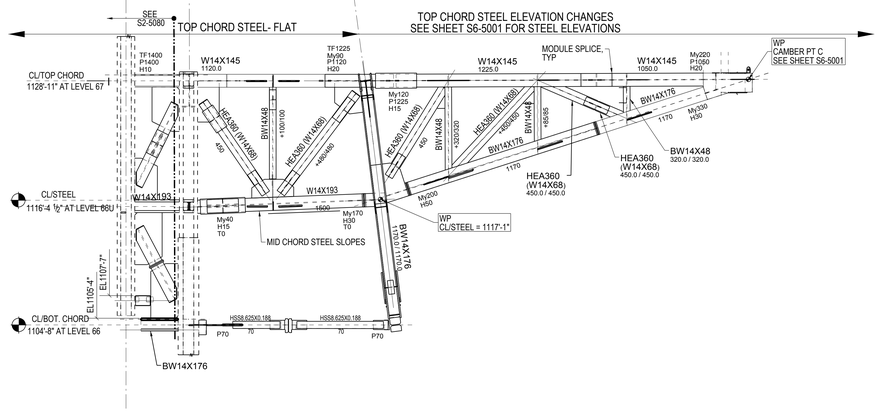

2 OB DECK TRUSS ELEV - GRID 15
NOT TO SCALE

Damian Titus
Buildings
APPROVED
Under Directive 2 of 1975
MUNICIPAL BUILDINGS
Date: 05/03/2017
NYC Development Hub

HUDSON YARDS - RETAIL PODIUM AND TOWER A
500 WEST 33RD STREET
New York, NY

Client
Related Companies
60 Columbus Circle
New York, NY 10023
TEL: 212.801.1000 FAX: 212.801.1048

Oxford Properties Group
320 Park Avenue, 17th Floor
New York, NY 10022
TEL: 212.986.7514 FAX: 212.986.7510

Architect
Kohn Pedersen Fox Associates
11 West 42nd Street
New York, New York 10036
TEL: 212.977.6500 FAX: 212.956.2526

Structural Engineer
Thornton Tomasetti, Inc.
51 Madison Avenue
New York, New York 10010
TEL: 917.661.7800 FAX: 718.661.7801

Mechanical, Electrical, Plumbing, Fire Protection
Jaros Baum & Bolles Consulting Engineers
80 Pine Street
New York, NY 10013
TEL: 212.530.9300 FAX: 212.269.5894

Retail Interior Design & Planning
Elkus-Manfredi
300 A Street
Boston, MA 02210
TEL: 617.426.1300

No	Description	Date
2	D.O.B AMENDMENT #2	10/15/2016
1	D.O.B BUILDING PERMIT FILING	12/10/2014

Key Plan

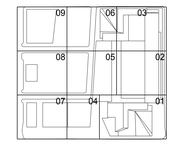

Issue Date 12/10/2014
Project No. N11328.00
Drawn By
Sheet Number

HYE-TA-S6-5002
Drawing Title

OB DECK TRUSS ELEVATIONS

Drawing Number
S6-5002
As-Sold Drawing Number
S-801.01

© 2013 KOHN PEDERSEN FOX ASSOCIATES PC. All rights reserved.

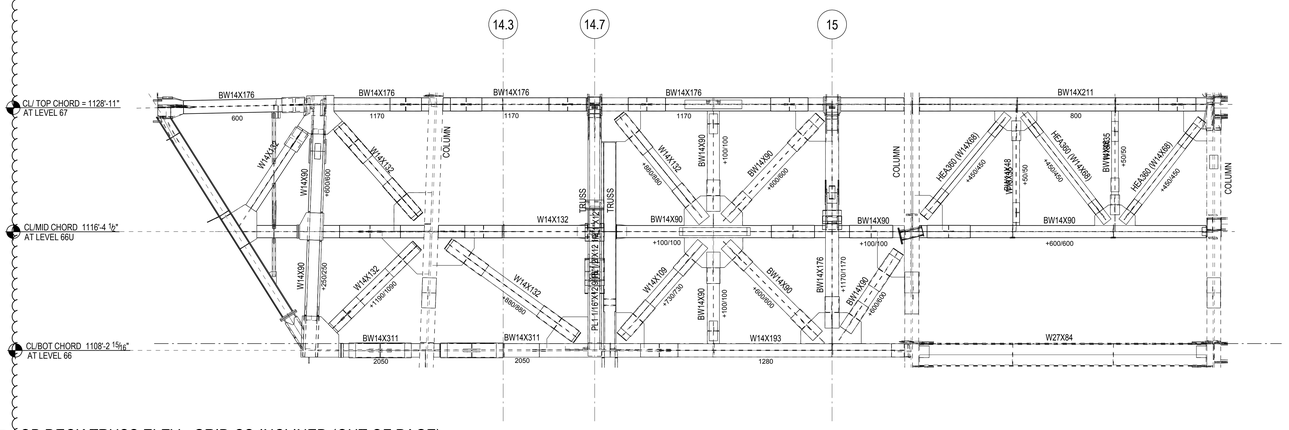

1 OB DECK TRUSS ELEV - GRID CS INCLINED (OUT OF PAGE)
NOT TO SCALE

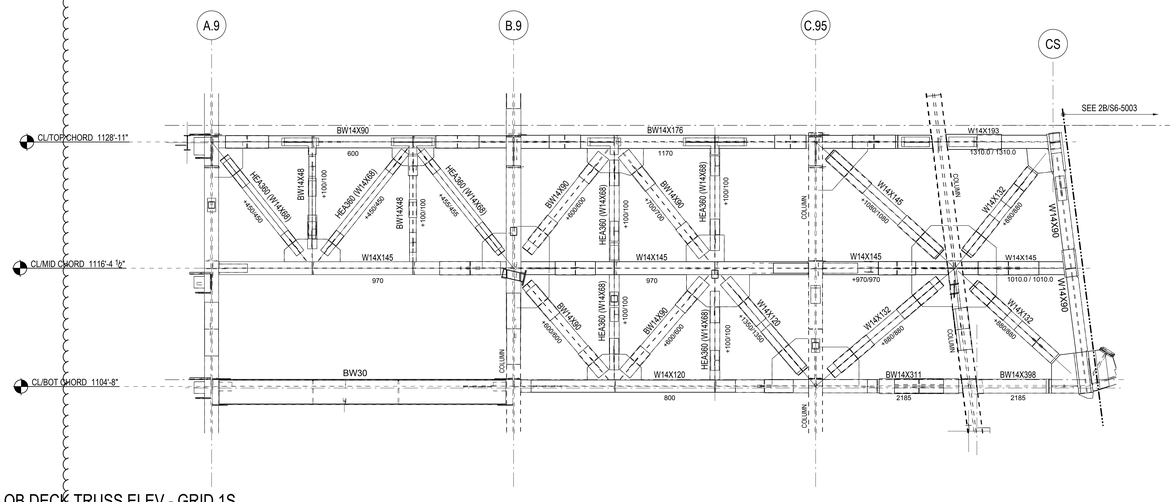

2A OB DECK TRUSS ELEV - GRID 1S
NOT TO SCALE

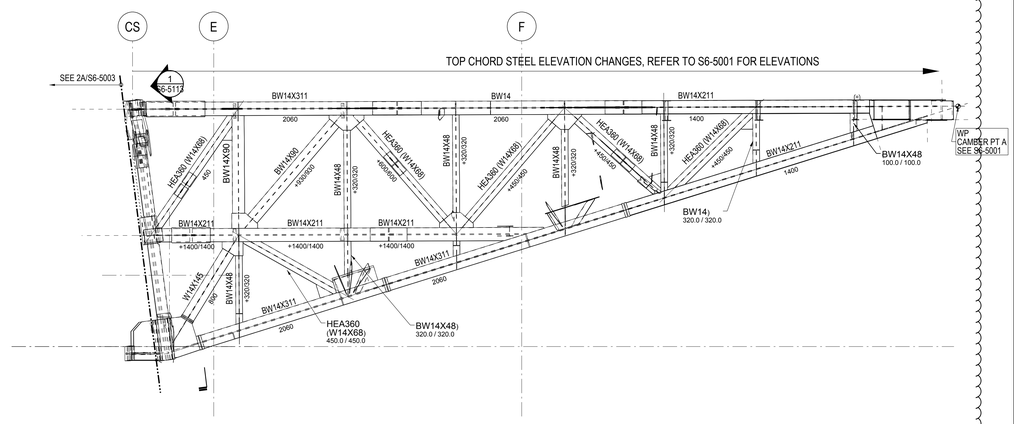

2B OB DECK TRUSS ELEVATION EAST OF GRID 1S - SKEWED
NOT TO SCALE

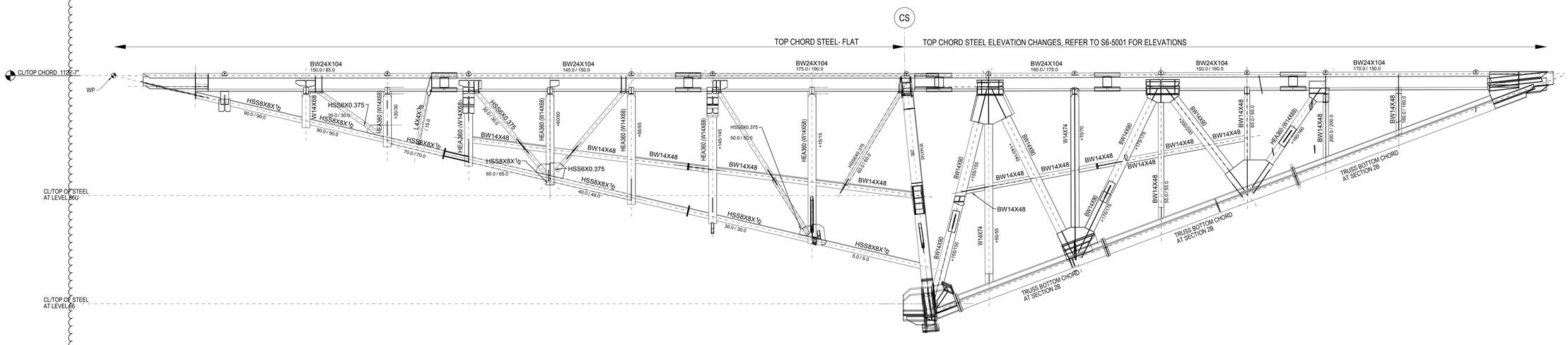

3 OB DECK TRUSS ELEV- SOUTH FACE SLOPED
NOT TO SCALE

Damian Titus
Buildings
APPROVED
Under Directive 2 of 1975
AMENDED APPLICATION
Date: 05/01/2017
NYC Development Hub

HUDSON YARDS - RETAIL PODIUM AND TOWER A
500 WEST 33RD STREET
New York, NY

Client
Related Companies
60 Columbus Circle
New York, NY 10023
TEL: 212.801.1000 FAX: 212.801.1048

Oxford Properties Group
320 Park Avenue, 17th Floor
New York, NY 10022
TEL: 212.986.7514 FAX: 212.986.7510

Architect
Kohn Pedersen Fox Associates
11 West 42nd Street
New York, New York 10036
TEL: 212.977.6500 FAX: 212.956.2526

Structural Engineer
Thornton Tomasetti, Inc.
51 Madison Avenue
New York, New York 10010
TEL: 917.661.7800 FAX: 718.661.7801

Mechanical, Electrical, Plumbing, Fire Protection
Jaros Baum & Bolles Consulting Engineers
80 Pine Street
New York, NY 10013
TEL: 212.530.9300 FAX: 212.269.5894

Retail Interior Design & Planning
Elkus-Manfredi
300 A Street
Boston, MA 02210
TEL: 617.426.1300

No.	Description	Date
2	D.O.B AMENDMENT #2	10/15/2016
1	D.O.B BUILDING PERMIT FILING	12/10/2014

Key Plan

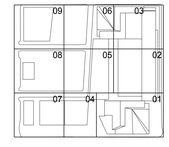

Issue Date 12/10/2014
Project No. N11328.00
Drawn By
Sheet Number

HYE-TA-S6-5003
Drawing Title

OB DECK TRUSS ELEVATIONS

Drawing Number
S6-5003
B-Scan Drawing Number
S-802.01

© 2013 KOHN PEDERSEN FOX ASSOCIATES PC. All rights reserved.

DEPT OF BLDGS 321380253 Job Number
E597766490 Scan Code

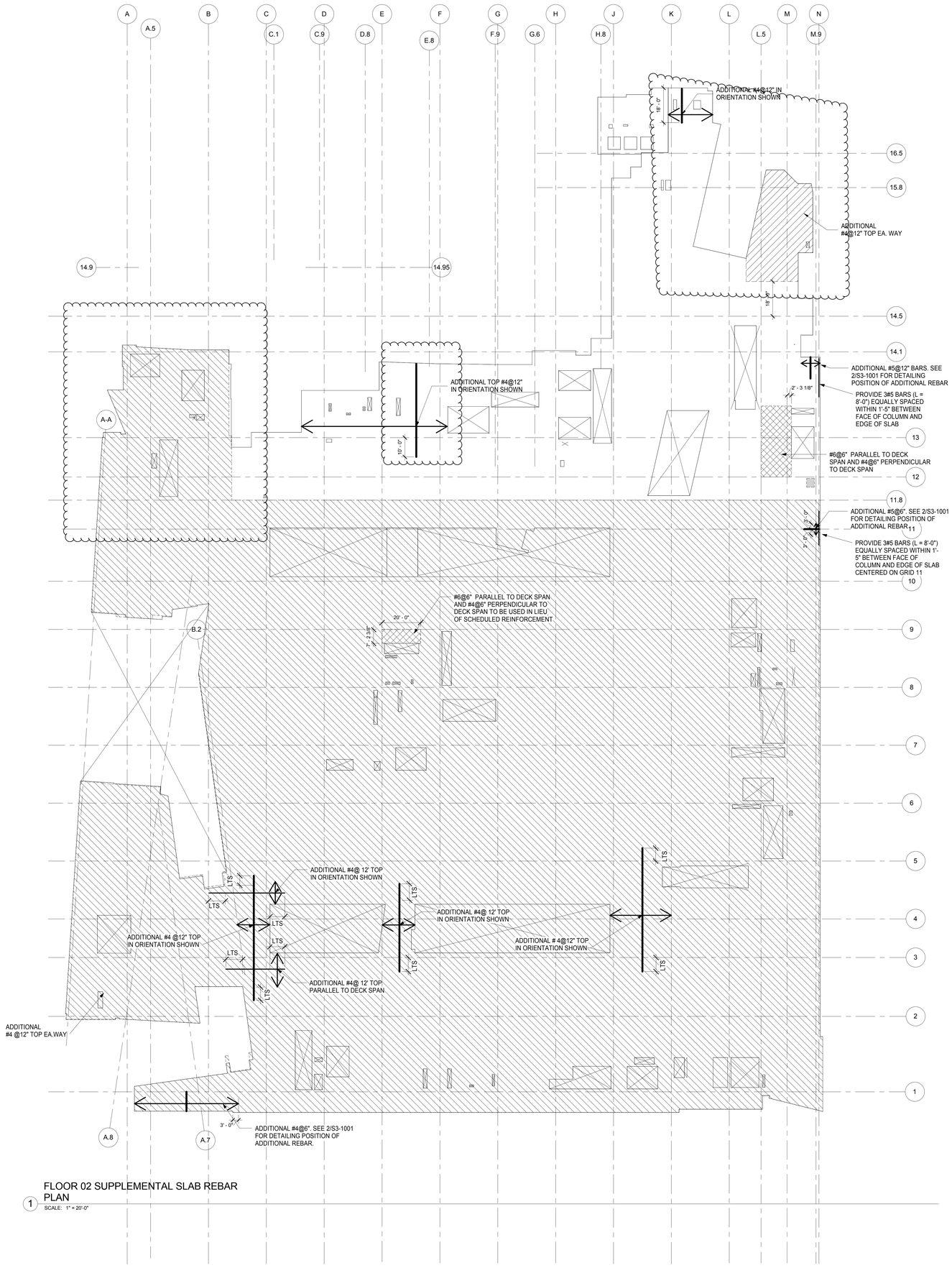

1 FLOOR 02 SUPPLEMENTAL SLAB REBAR PLAN
SCALE: 1" = 20'-0"

NOTE: SEE S1-0106L FOR ADDITIONAL BARS REQUIRED @ LEVEL 1L

HUDSON YARDS - RETAIL PODIUM AND TOWER A

500 WEST 33RD STREET
New York, NY

Client
Related Companies
60 Columbus Circle
New York, NY 10023
TEL: 212.801.1000 FAX: 212.801.1048

Oxford Properties Group
320 Park Avenue, 17th Floor
New York, NY 10022
TEL: 212.986.7514 FAX: 212.986.7510

Architect
Kohn Pedersen Fox Associates
11 West 42nd Street
New York, New York 10036
TEL: 212.977.6500 FAX: 212.956.2526

Structural Engineer
Thornton Tomasetti, Inc.
51 Madison Avenue
New York, New York 10010
TEL: 917.661.7800 FAX: 718.661.7801

Mechanical, Electrical, Plumbing, Fire Protection
Jaros Baum & Bolles Consulting Engineers
80 Pine Street
New York, NY 10013
TEL: 212.530.9300 FAX: 212.269.5894

Retail Interior Design & Planning
Elkus-Manfredi
300 A Street
Boston, MA 02210
TEL: 617.426.1300

No.	Description	Date
2	D.O.B. AMENDMENT #2	10/15/2016
1	D.O.B. BUILDING PERMIT FILING	12/10/2014

Key Plan

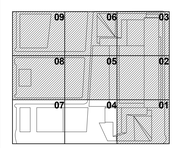

Issue Date: 12/10/2014
Project No. N11328.00
Drawn By Author
Sheet Number

HYE -TA -S9-9002

Drawing Title

LEVEL 02 SLAB REBAR

Damian Titus
Buildings
APPROVED
Under Directive 2 of 1975
AMENDED APPLICATION
Date: 05/03/2017
NYC Development Hub

0 4' 8' 16'

N

Drawing Number
S9-9002
B-Scan Drawing Number
S-822.01

© 2013 KOHN PEDERSEN FOX ASSOCIATES PC. All rights reserved.

S9-9002
10/12/2016 2:54:41 PM
LEVEL 02 SLAB REBAR
P:\NYT\Projects\N11328.00\Drawings\Structural\Record\Issued\2016-10-18 - D.O.B. Amendment No.2\Revit - Rev- Removed\HYTA PD_SLABS_COORDINATION.rvt

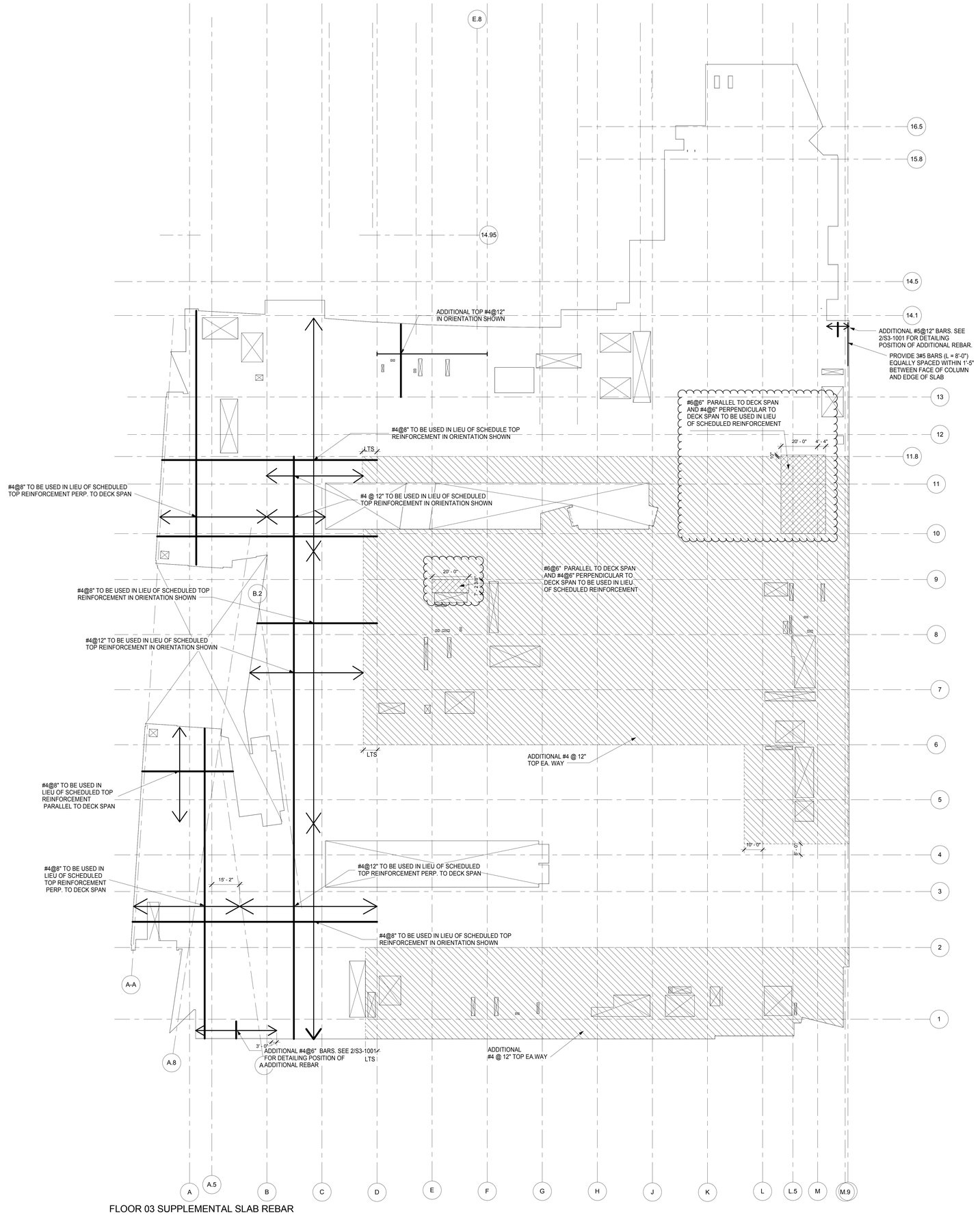

FLOOR 03 SUPPLEMENTAL SLAB REBAR PLAN

1 SCALE: 1" = 20'-0"

0 4' 8' 16'

N

HUDSON YARDS - RETAIL PODIUM AND TOWER A

500 WEST 33RD STREET
New York, NY

Client
Related Companies
60 Columbus Circle
New York, NY 10023
TEL: 212.801.1000 FAX: 212.801.1048

Oxford Properties Group
320 Park Avenue, 17th Floor
New York, NY 10022
TEL: 212.986.7514 FAX: 212.986.7510

Architect
Kohn Pedersen Fox Associates
11 West 42nd Street
New York, New York 10036
TEL: 212.977.6500 FAX: 212.956.2526

Structural Engineer
Thornton Tomasetti, Inc.
51 Madison Avenue
New York, New York 10010
TEL: 917.661.7800 FAX: 718.661.7801

Mechanical, Electrical, Plumbing, Fire Protection
Jaros Baum & Bolles Consulting Engineers
80 Pine Street
New York, NY 10013
TEL: 212.530.9300 FAX: 212.269.5894

Retail Interior Design & Planning
Elkus-Manfredi
300 A Street
Boston, MA 02210
TEL: 617.426.1300

No.	Description	Date
2	D.O.B. AMENDMENT #2	10/15/2016
1	D.O.B. BUILDING PERMIT FILING	12/10/2014

Key Plan

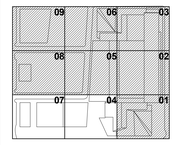

Damian Titus
Buildings
APPROVED
Under Directive 2 of 1975
AMENDED APPLICATION
Date: 05/01/2017
NYC Development Hub

Issue Date: 12/10/2014
Project No. N11328.00
Drawn By Author
Sheet Number

HYE -TA -S9-9003

Drawing Title

LEVEL 03 SLAB REBAR

Drawing Number
S9-9003
8-Area Drawing Number
S-823.01

© 2013 KOHN PEDERSEN FOX ASSOCIATES PC. All rights reserved.

S9-9003
10/12/2016 2:54:43 PM
LEVEL 03 SLAB REBAR
I:\NYP\Projects\N11328.00\Drawings\Structural\Record\Issued\2016-10-16 - D.O.B. Amendment No.2\Revit - Rev. Removed\HYTA PD_SLABS_COORDINATION.rvt

DEPT OF BLDGS STRUCTURES Job Number
E0900902413 Scan Code

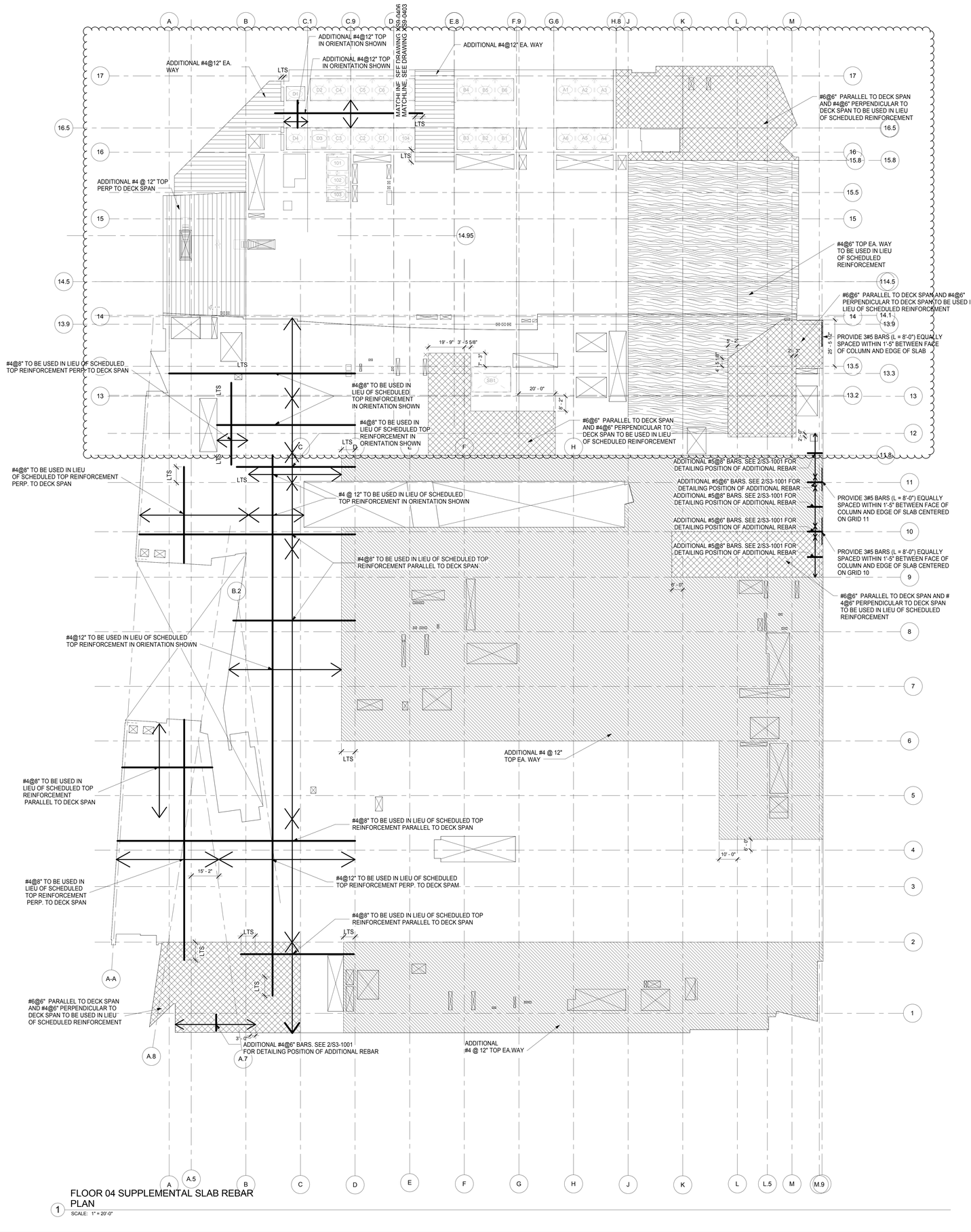

FLOOR 04 SUPPLEMENTAL SLAB REBAR PLAN

1 SCALE: 1" = 20'-0"

0 4' 8' 16'

HUDSON YARDS - RETAIL PODIUM AND TOWER A

500 WEST 33RD STREET
New York, NY

Client
Related Companies
60 Columbus Circle
New York, NY 10023
TEL: 212.801.1000 FAX: 212.801.1048

Oxford Properties Group
320 Park Avenue, 17th Floor
New York, NY 10022
TEL: 212.986.7514 FAX: 212.986.7510

Architect
Kohn Pedersen Fox Associates
11 West 42nd Street
New York, New York 10036
TEL: 212.977.6500 FAX: 212.956.2526

Structural Engineer
Thornton Tomasetti, Inc.
51 Madison Avenue
New York, New York 10010
TEL: 917.661.7800 FAX: 718.661.7801

Mechanical, Electrical, Plumbing, Fire Protection
Jaros Baum & Bolles Consulting Engineers
80 Pine Street
New York, NY 10013
TEL: 212.530.9300 FAX: 212.269.5894

Retail Interior Design & Planning
Elkus-Manfredi
300 A Street
Boston, MA 02210
TEL: 617.426.1300

No.	Description	Date
2	D.O.B. AMENDMENT #2	10/15/2016
1	D.O.B. BUILDING PERMIT FILING	12/10/2014

Key Plan

09 06 03
08 05 02
07 04 01

Issue Date: 12/10/2014
Project No. N11328.00
Drawn By Author
Sheet Number

HYE -TA -S9-9004

Drawing Title

LEVEL 04 SLAB REBAR

Damian Titus
APPROVED
Under Directive 2 of 1975
AMENDED APPLICATION
Date: 05/01/2017
NYC Development Hub

Drawing Number
S9-9004
B-Scan Drawing Number
S-824.01

© 2013 KOHN PEDERSEN FOX ASSOCIATES PC. All rights reserved.

S9-9004
10/12/2016 2:54:46 PM
LEVEL 04 SLAB REBAR
P:\NY1\Projects\N11328.00\Drawings\Structural\Record\Issued\2016-10-16 - D.O.B. Amendment No.2\Revit - Rev. Removed\HYTA PD_SLABS_COORDINATION.rvt

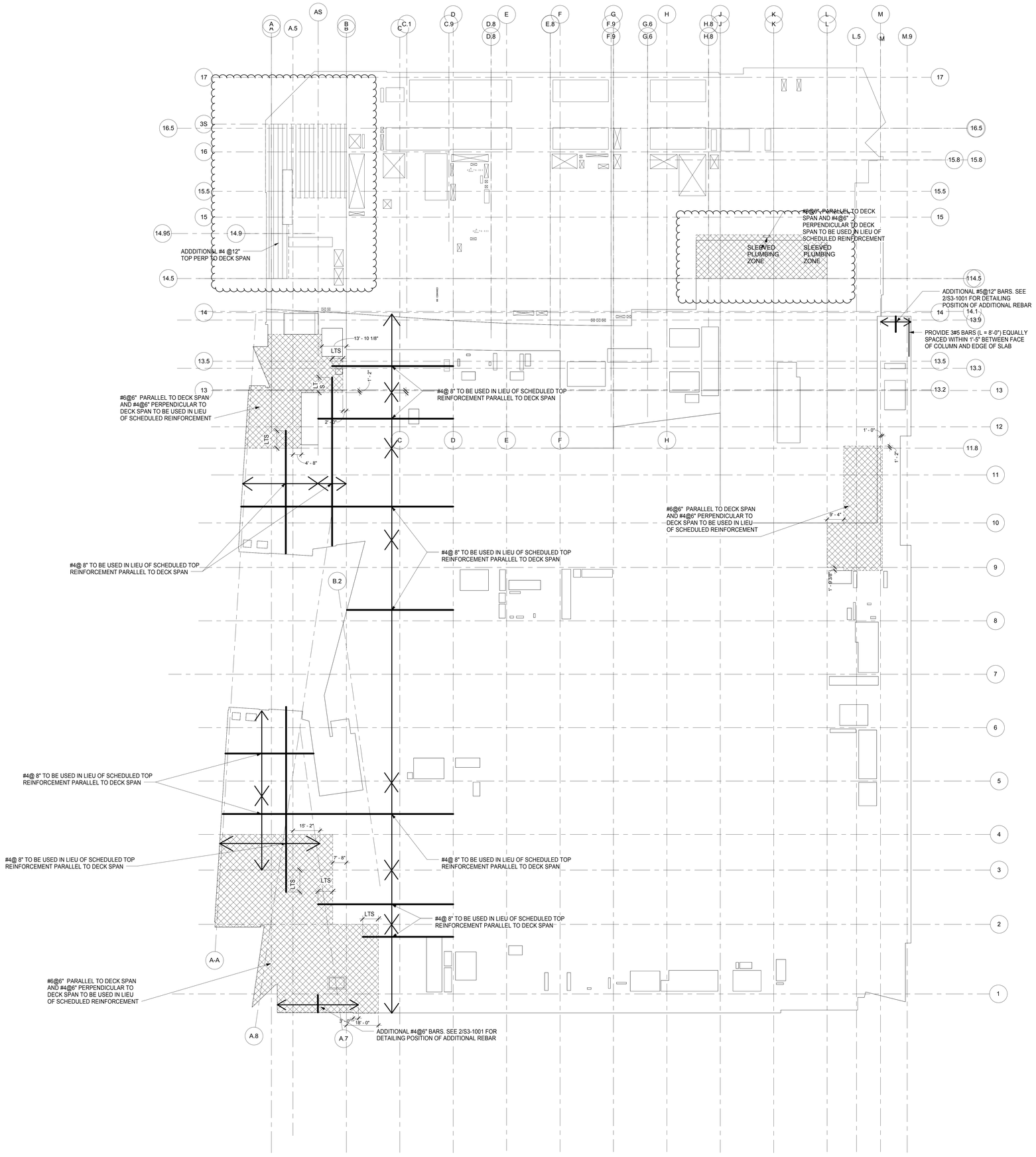

1 FLOOR 05 SUPPLEMENTAL SLAB REBAR PLAN
SCALE: 1" = 20'-0"

0 4' 8' 16'

N

HUDSON YARDS - RETAIL PODIUM AND TOWER A

500 WEST 33RD STREET
New York, NY

Client
Related Companies
60 Columbus Circle
New York, NY 10023
TEL: 212.801.1000 FAX: 212.801.1048

Oxford Properties Group
320 Park Avenue, 17th Floor
New York, NY 10022
TEL: 212.986.7514 FAX: 212.986.7510

Architect
Kohn Pedersen Fox Associates
11 West 42nd Street
New York, New York 10036
TEL: 212.977.6500 FAX: 212.956.2526

Structural Engineer
Thornton Tomasetti, Inc.
51 Madison Avenue
New York, New York 10010
TEL: 917.661.7800 FAX: 718.661.7801

Mechanical, Electrical, Plumbing, Fire Protection
Jaros Baum & Bolles Consulting Engineers
80 Pine Street
New York, NY 10013
TEL: 212.530.9300 FAX: 212.269.5894

Retail Interior Design & Planning
Elkus-Manfredi
300 A Street
Boston, MA 02210
TEL: 617.426.1300

No.	Description	Date
2	D.O.B. AMENDMENT #2	10/15/2016
1	D.O.B. BUILDING PERMIT FILING	12/10/2014

Key Plan

09 06 03
08 05 02
07 04 01

Issue Date: 12/10/2014
Project No. N11328.00
Drawn By Author
Sheet Number

HYE -TA -S9-9005

Drawing Title

LEVEL 05 SLAB REBAR

Drawing Number
S9-9005
B-Scan Drawing Number
S-825.01

Damian Titus
Buildings
APPROVED
Under Directive 2 of 1975
AMENDED APPLICATION
Date: 05/01/2017
NYC Development Hub

© 2013 KOHN PEDERSEN FOX ASSOCIATES PC. All rights reserved.

S9-9005
10/12/2016 2:54:48 PM
LEVEL 05 SLAB REBAR
P:\NY1\Projects\N11328.00\Drawings\Structural\Record\Issued\2016-10-18 - D.O.B. Amendment No.2\Revit - Rev. Removed\HYTA PD_SLABS_COORDINATION.rvt

DEPT OF BUILDINGS 421189025 Job Number
E3012754215 Scan Code

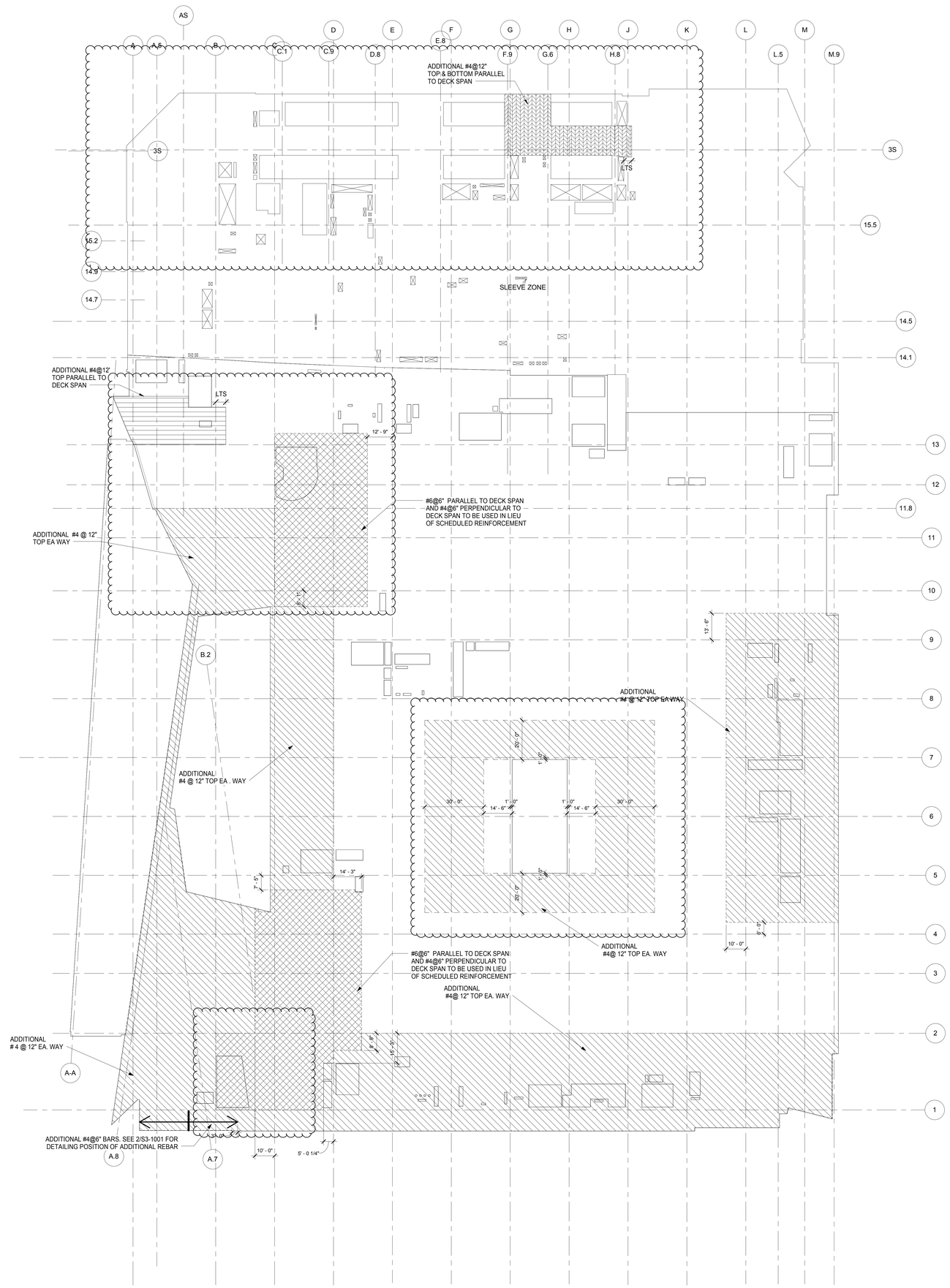

1 FLOOR 06 SUPPLEMENTAL SLAB REBAR PLAN
SCALE: 1" = 20'-0"

0 4' 8' 16'

N

Damian Titus
APPROVED
Under Directive 2 of 1975
AMENDED APPLICATION
Date: 05/01/2017
NYC Development Hub

HUDSON YARDS - RETAIL PODIUM AND TOWER A

500 WEST 33RD STREET
New York, NY

Client
Related Companies
60 Columbus Circle
New York, NY 10023
TEL: 212.801.1000 FAX: 212.801.1048

Oxford Properties Group
320 Park Avenue, 17th Floor
New York, NY 10022
TEL: 212.986.7514 FAX: 212.986.7510

Architect
Kohn Pedersen Fox Associates
11 West 42nd Street
New York, New York 10036
TEL: 212.977.6500 FAX: 212.956.2526

Structural Engineer
Thornton Tomasetti, Inc.
51 Madison Avenue
New York, New York 10010
TEL: 917.661.7800 FAX: 718.661.7801

Mechanical, Electrical, Plumbing, Fire Protection
Jaros Baum & Bolles Consulting Engineers
80 Pine Street
New York, NY 10013
TEL: 212.530.9300 FAX: 212.269.5894

Retail Interior Design & Planning
Elkus-Manfredi
300 A Street
Boston, MA 02210
TEL: 617.426.1300

No.	Description	Date
2	D.O.B. AMENDMENT #2	10/15/2016
1	D.O.B. BUILDING PERMIT FILING	12/10/2014

Key Plan

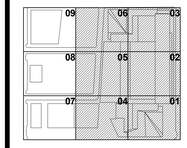

Issue Date: 12/10/2014
Project No. N11328.00
Drawn By Author
Sheet Number

HYE -TA -S9-9006

Drawing Title

LEVEL 06 SLAB REBAR

Drawing Number
S9-9006
B-Scan Drawing Number

S-826.01

© 2013 KOHN PEDERSEN FOX ASSOCIATES PC. All rights reserved.

S9-9006
10/12/2016 2:54:51 PM
LEVEL 06 SLAB REBAR
P:\NY1\Projects\N11328.00\Drawings\Structural\Record\Issued\2016-10-18 - D.O.B. Amendment No.2\Revit - Rev. Removed\HYTA PD_SLABS_COORDINATION.rvt

DEPT OF BLDGS STR390025 Job Number
ES1900126997 Scan Code

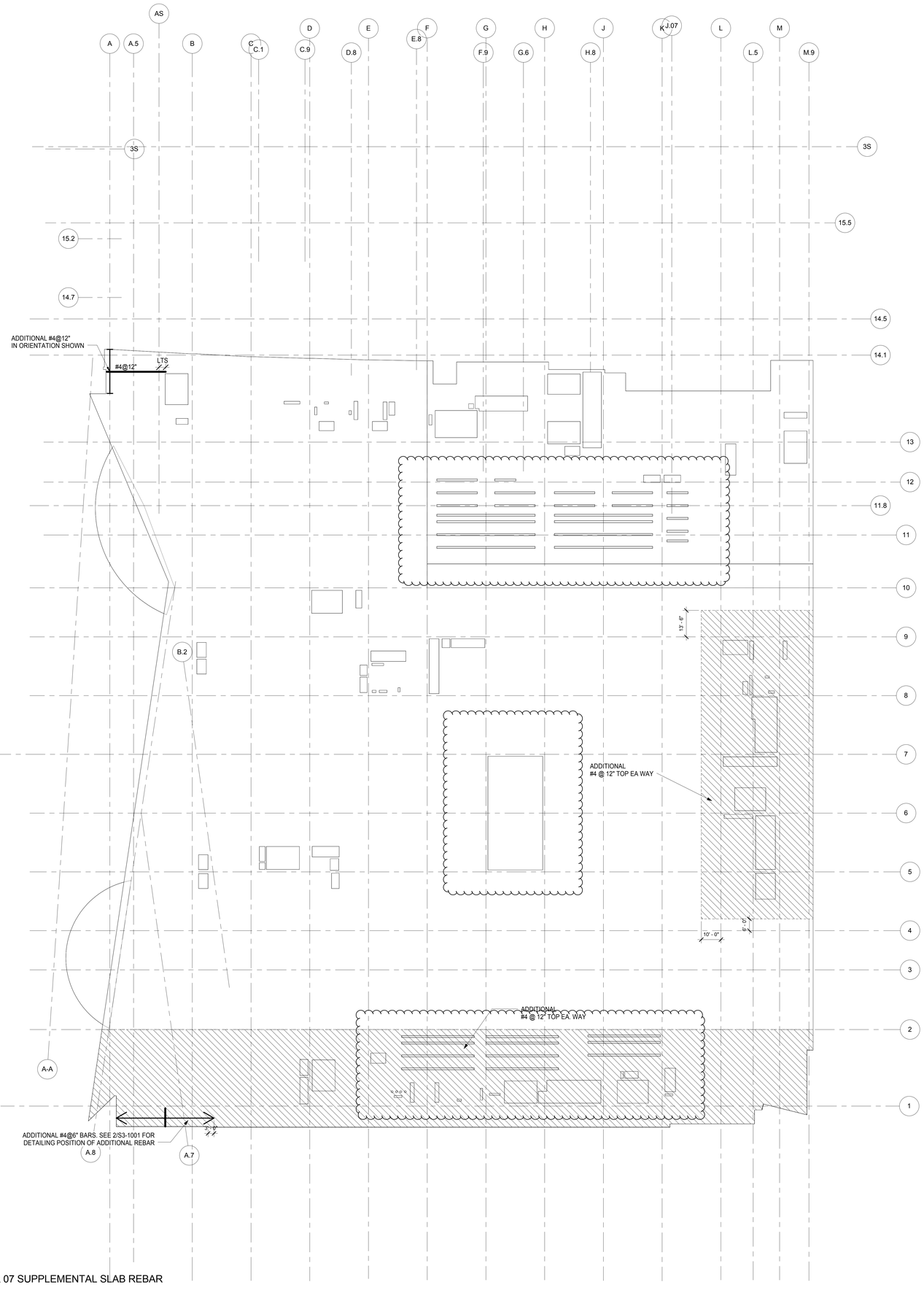

1 FLOOR 07 SUPPLEMENTAL SLAB REBAR PLAN
SCALE: 1" = 20'-0"

HUDSON YARDS - RETAIL PODIUM AND TOWER A

500 WEST 33RD STREET
New York, NY

Client
Related Companies
60 Columbus Circle
New York, NY 10023
TEL: 212.801.1000 FAX: 212.801.1048

Oxford Properties Group
320 Park Avenue, 17th Floor
New York, NY 10022
TEL: 212.986.7514 FAX: 212.986.7510

Architect
Kohn Pedersen Fox Associates
11 West 42nd Street
New York, New York 10036
TEL: 212.977.6500 FAX: 212.956.2526

Structural Engineer
Thornton Tomasetti, Inc.
51 Madison Avenue
New York, New York 10010
TEL: 917.661.7800 FAX: 718.661.7801

Mechanical, Electrical, Plumbing, Fire Protection
Jaros Baum & Bolles Consulting Engineers
80 Pine Street
New York, NY 10013
TEL: 212.530.9300 FAX: 212.269.5894

Retail Interior Design & Planning
Elkus-Manfredi
300 A Street
Boston, MA 02210
TEL: 617.426.1300

No.	Description	Date
2	D.O.B. AMENDMENT #2	10/15/2016
1	D.O.B. BUILDING PERMIT FILING	12/10/2014

Key Plan

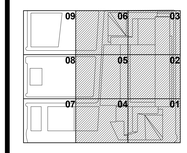

Issue Date: 12/10/2014
Project No. N11328.00
Drawn By Author
Sheet Number

HYE -TA -S9-9007

Drawing Title

LEVEL 07 SLAB REBAR

Damian Titus
Buildings
APPROVED
Under Directive 2 of 1975
AMENDED APPLICATION
Date: 05/03/2017
NYC Development Hub

Drawing Number
S9-9007
B-Scan Drawing Number
S-827.01

0 4' 8' 16'
N

© 2013 KOHN PEDERSEN FOX ASSOCIATES PC All rights reserved.

S9-9007
10/12/2016 2:54:53 PM
LEVEL 07 SLAB REBAR
P:\NY1\Projects\N11328.00\Drawings\Structural\Record\Issued\2016-10-18 - D.O.B. Amendment No.2\Revit - Rev. Removed\HYTA PD_SLABS_COORDINATION.rvt

DEPT OF BUILDINGS STRUCTURES Job Number
B10960535493 Scan Code

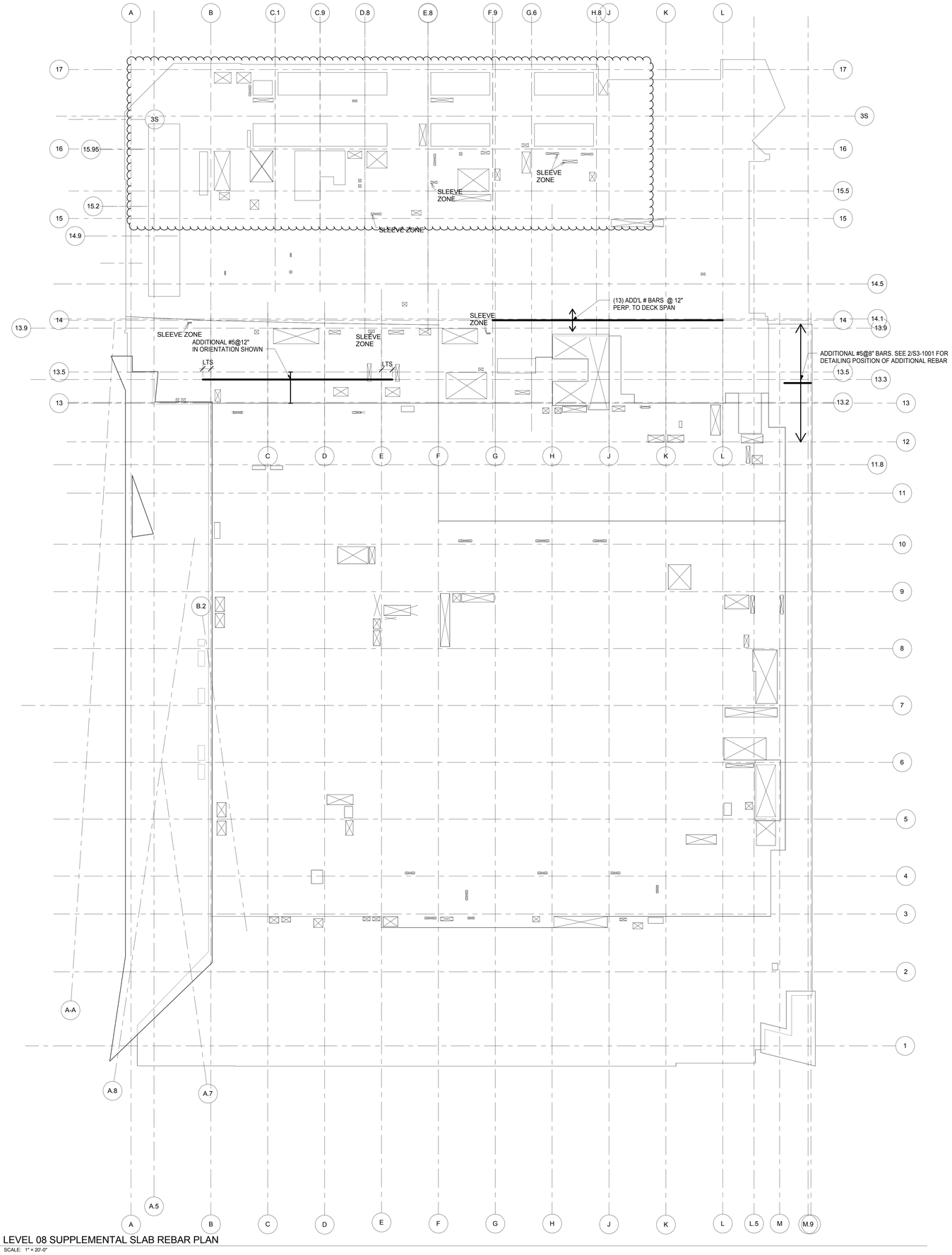

1 LEVEL 08 SUPPLEMENTAL SLAB REBAR PLAN
SCALE: 1" = 20'-0"

HUDSON YARDS - RETAIL PODIUM AND TOWER A

500 WEST 33RD STREET
New York, NY

Client
Related Companies
60 Columbus Circle
New York, NY 10023
TEL: 212.801.1000 FAX: 212.801.1048

Oxford Properties Group
320 Park Avenue, 17th Floor
New York, NY 10022
TEL: 212.986.7514 FAX: 212.986.7510

Architect
Kohn Pedersen Fox Associates
11 West 42nd Street
New York, New York 10036
TEL: 212.977.6500 FAX: 212.956.2526

Structural Engineer
Thornton Tomasetti, Inc.
51 Madison Avenue
New York, New York 10010
TEL: 917.661.7800 FAX: 718.661.7801

Mechanical, Electrical, Plumbing, Fire Protection
Jaros Baum & Bolles Consulting Engineers
80 Pine Street
New York, NY 10013
TEL: 212.530.9300 FAX: 212.269.5894

Retail Interior Design & Planning
Elkus-Manfredi
300 A Street
Boston, MA 02210
TEL: 617.426.1300

No.	Description	Date
2	D.O.B. AMENDMENT #2	10/15/2016
1	D.O.B. BUILDING PERMIT FILING	12/10/2014

Key Plan

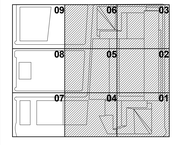

Issue Date: 12/10/2014
Project No. N11328.00
Drawn By Author
Sheet Number HYE -TA -S9-9008

Drawing Title
LEVEL 08 SLAB REBAR

Drawing Number
S9-9008
S-Num Drawing Number
S-828.01

SHEET 442 OF 443

Damian Titus
Buildings
APPROVED
Under Directive 2 of 1975
AMENDED APPLICATION
Date: 05/03/2017
NYC Development Hub

0 4' 8' 16'

N

© 2013 KOHN PEDERSEN FOX ASSOCIATES PC. All rights reserved.

S9-9008
10/12/2016 2:54:53 PM
LEVEL 08 SLAB REBAR
P:\NY\Projects\N11328.00\Drawings\Structural\Record\Issued\2016-10-16 - D.O.B. Amendment No.2\Revit - Rev. Removed\HYTA PD_SLABS_COORDINATION.rvt

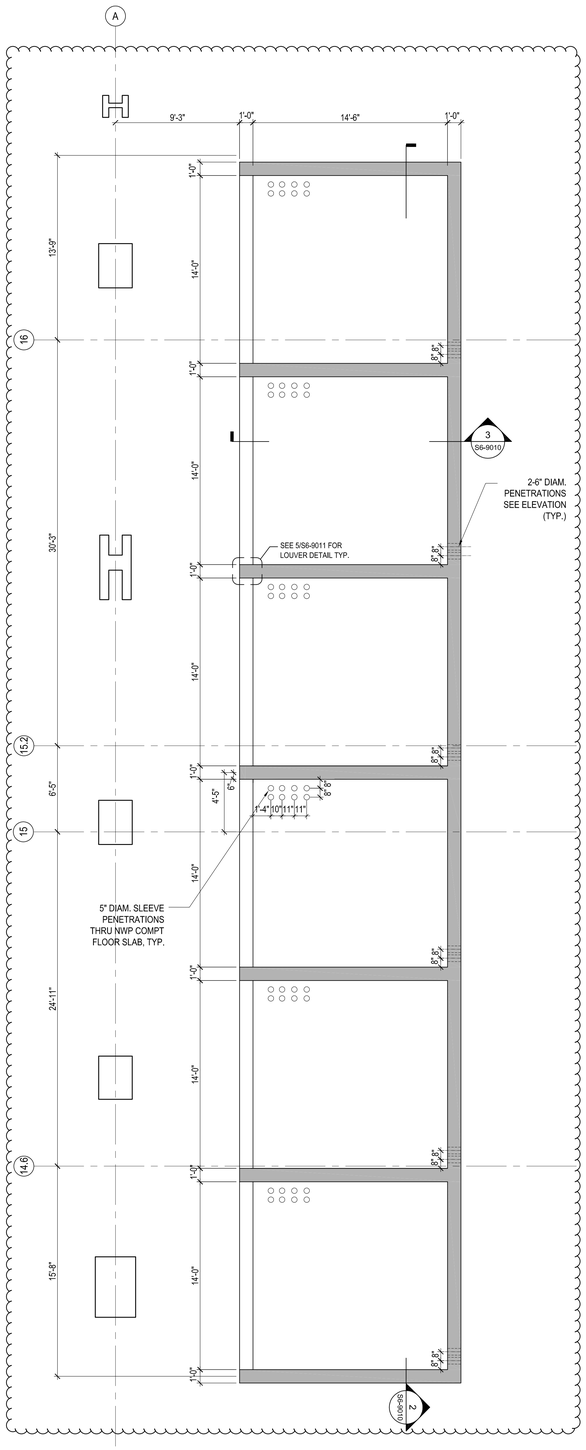

1 PART PLAN OF CON EDISON VAULTS - FLOOR 08
1/4"=1'-0"

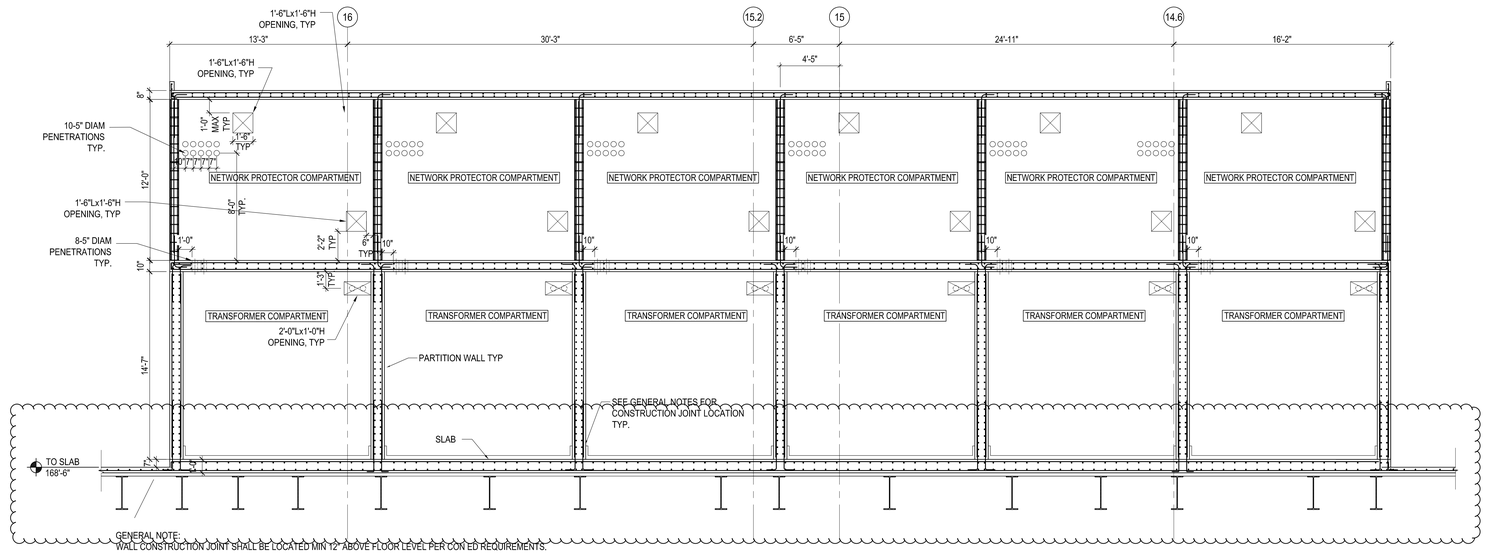

2 SECTION AT VAULTS AND TRANSFORMER COMPARTMENTS
1/4"=1'-0"

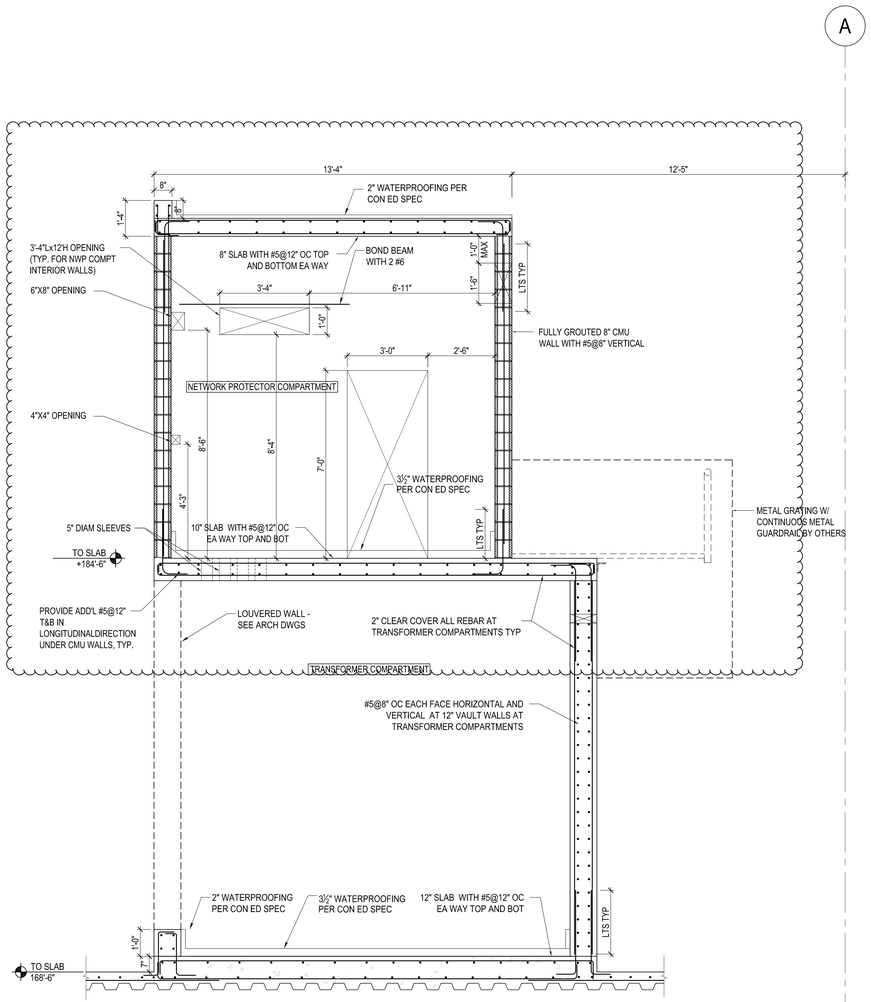

3 SECTION THROUGH CON EDISON VAULTS
1/2"=1'-0"

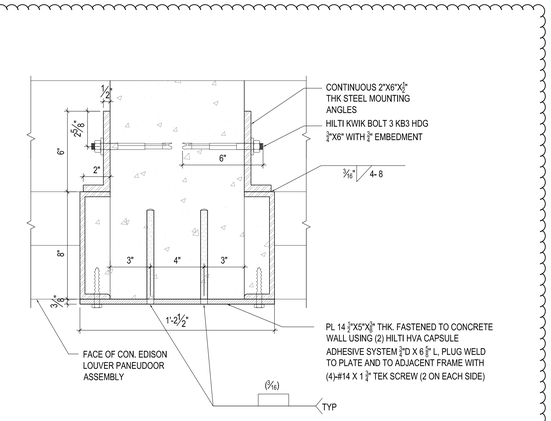

5 LOUVER DETAIL

NOT TO SCALE

GENERAL NOTE:
CLEAN FIELD WELDS, BOLTED CONNECTIONS, AND ABRADED AREAS, AND TOUCH UP PAINT WITH THE SAME COLOR.

TRANSFORMER COMPARTMENT SPECIFICATIONS

MATERIAL SPECIFICATIONS

ALL REINFORCING BARS SHALL BE BILLET STEEL, INTERMEDIATE GRADE, DEFORMED, AND SHALL CONFORM TO A.S.T.M SPEC DES. A-615 GRADE 60. REINFORCING BARS SHALL BE EPOXY-COATED IN ACCORDANCE WITH A.S.T.M. SPEC. A-775.

REINFORCING BARS SHALL BE WIRE TIED AT ALL CONTACT POINTS WITH PLASTIC COATED TIE WIRE. REINFORCEMENT SUPPORTED FROM FORM WORK SHALL REST ON COATED WIRE BAR SUPPORTS. EPOXY COATING DAMAGED AS A RESULT OF HANDLING OR CUTTING SHALL BE REPAIRED WITH PATCHING MATERIAL CONFORMING TO A.S.T.M. SPEC. A-775

MINIMUM OF 5ksi CONCRETE STRENGTH TO BE USED FOR ALL CON ED VAULT WALLS AND SLABS

CONSTRUCTION SPECIFICATIONS

ALL CONCRETE MATERIAL FOR CONSTRUCTION AND PROTECTION FOR REINFORCING BARS SHALL CONFORM TO N.Y. CITY BLDG. CODE RS-10-3, ACI-318-14 SECT. 4.2.

CEMENT MORTAR SHALL BE IN ACCORDANCE WITH CON EDISON CO. SPEC. EO-100-167.

ALL REINFORCING BARS SHALL HAVE 2" MINIMUM CONCRETE PROTECTION UON.

ALL REINFORCING BARS SHALL CLEAR ALL CONDUIT OPENINGS BY 4" MIN ON ALL SIDES.

NETOWRK PROTECTOR COMPARTMENT SPECIFICATIONS

CONSTRUCTION SPECIFICATIONS

ALL REINFORCING BARS SHALL CLEAR ALL CONDUIT OPENINGS BY 4" MIN ON ALL SIDES.

4 VAULT AND TRANSFORMER GENERAL NOTES

Damian Titus
Buildings
APPROVED
Under Directive 2 of 1975
AMENDED APPLICATION
Date: 05/03/2017
NYC Development Hub

CERT OF BLDGS 421395253 Job Number
B1630042500 Scan Code

HUDSON YARDS - RETAIL PODIUM AND TOWER A
500 WEST 33RD STREET
New York, NY

Client
Related Companies
60 Columbus Circle
New York, NY 10023
TEL: 212.801.1000 FAX: 212.801.1048

Oxford Properties Group
320 Park Avenue, 17th Floor
New York, NY 10022
TEL: 212.986.7514 FAX: 212.986.7510

Architect
Kohn Pedersen Fox Associates
11 West 42nd Street
New York, New York 10036
TEL: 212.977.6500 FAX: 212.956.2526

Structural Engineer
Thornton Tomasetti, Inc.
51 Madison Avenue
New York, New York 10010
TEL: 917.661.7800 FAX: 718.661.7801

Mechanical, Electrical, Plumbing, Fire Protection
Jaros Baum & Bolles Consulting Engineers
80 Pine Street
New York, NY 10013
TEL: 212.530.9300 FAX: 212.269.5894

Retail Interior Design & Planning
Elkus-Manfredi
300 A Street
Boston, MA 02210
TEL: 617.426.1300

No.	Description	Date
2	D.O.B. AMENDMENT #2	10/15/2016
1	D.O.B. BUILDING PERMIT FILING	12/10/2014

Key Plan

Issue Date: 12/10/2014
Project No. N11328.00
Drawn By
Sheet Number

HYE-TA-S6-9010
Drawing Title

CONED VAULT PART PLANS AND SECTIONS L8

Drawing Number
S6-9010
B-Scan Drawing Number

S-885.01

SHEET 396 OF 443

© 2012 KOHN PEDERSEN FOX ASSOCIATES PC. All rights reserved.

TYPICAL STEEL BEAM DETAILS I
C:\Users\JSantos\Documents\1-HUDSON YARDS LOCAL MODELS\TOWER A AND PODIUM\N1328.00 - Tower A & East Podium_local.rvt
S4-2001
8/7/2014 12:28:41 PM

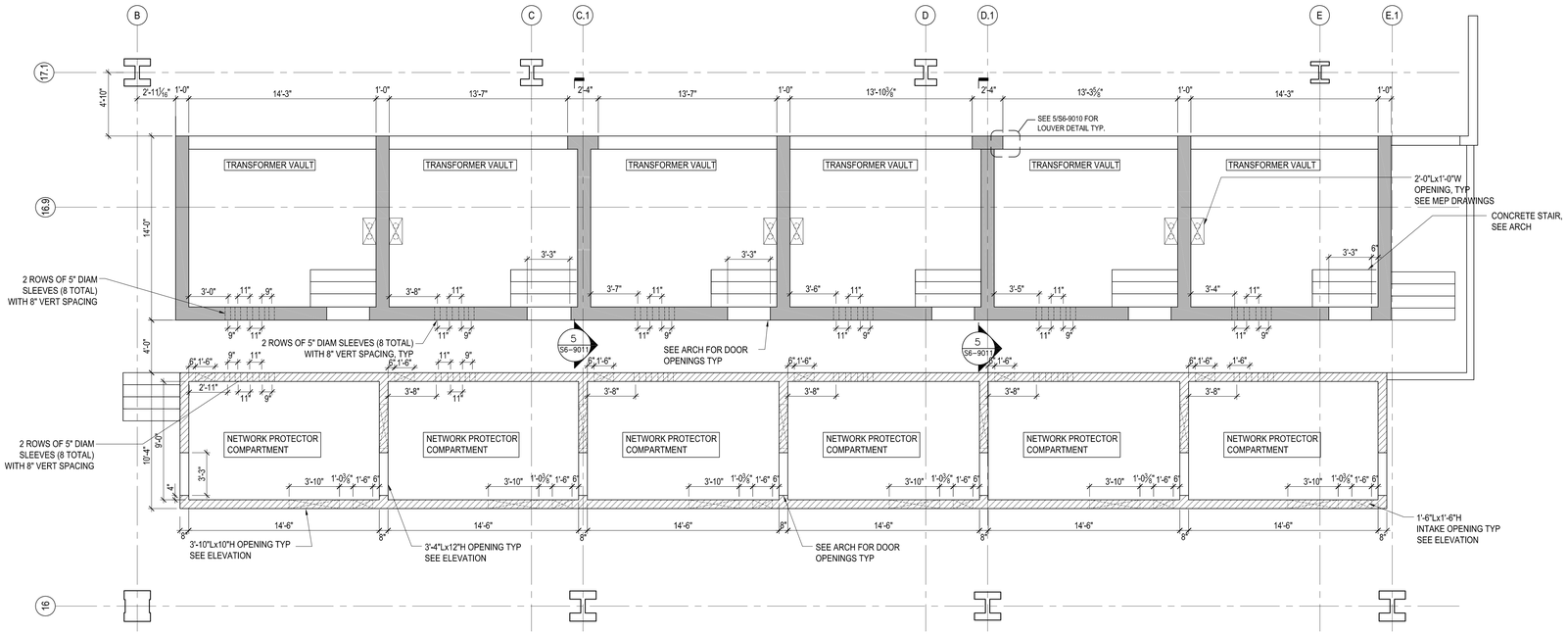

1 PART PLAN OF CON EDISON VAULTS - FLOOR 39
1/4"=1'-0"

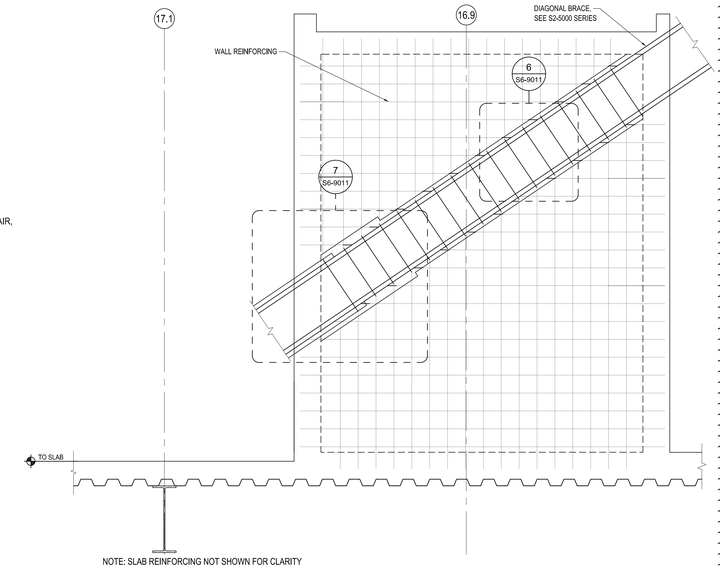

5 OVERALL WALL/BRACE ELEVATION
1/2"=1'-0"

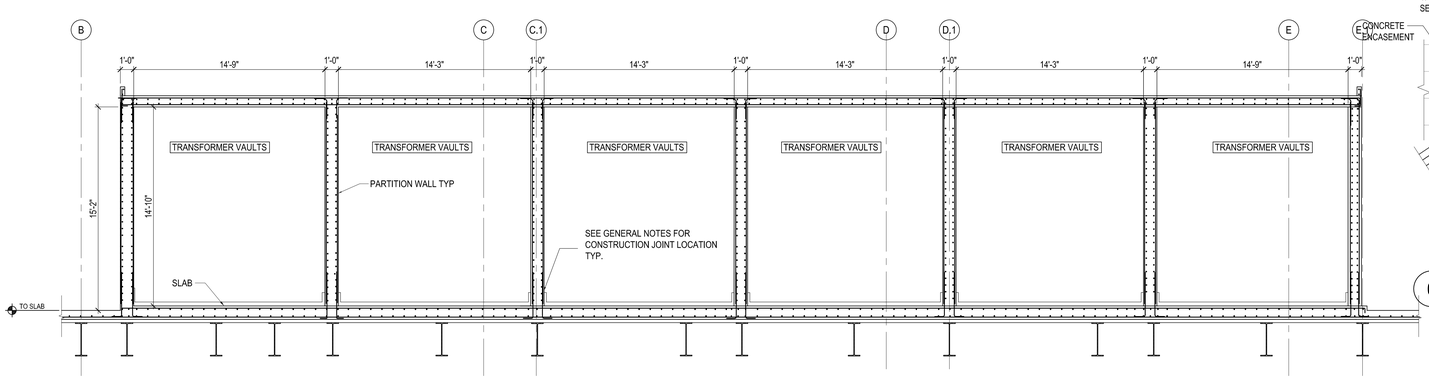

GENERAL NOTE:
WALL CONSTRUCTION JOINT SHALL BE LOCATED MIN 12" ABOVE FLOOR LEVEL PER CON ED REQUIREMENTS.

2 SECTION AT TRANSFORMER VAULTS
1/4"=1'-0"

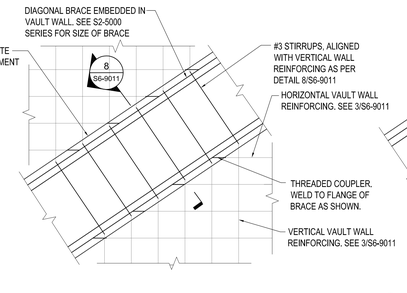

6 TYPICAL ENCASED BRACE ELEVATION
3/4"=1'-0"

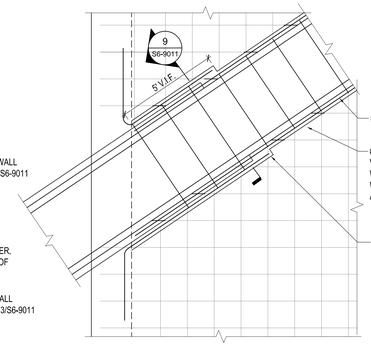

7 ENCASED BRACE ELEVATION AT SUPPORT LOCATION
3/4"=1'-0"

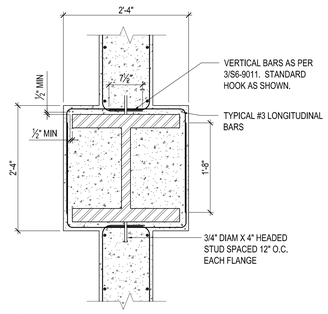

8 ENCASED BRACE DETAIL
1"=1'-0"

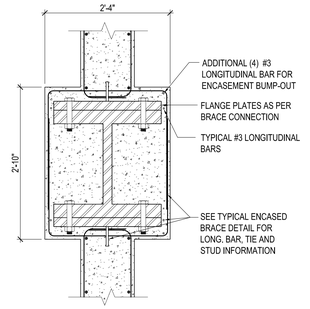

9 ENCASED BRACE DETAIL @ END CONNECTION
1"=1'-0"

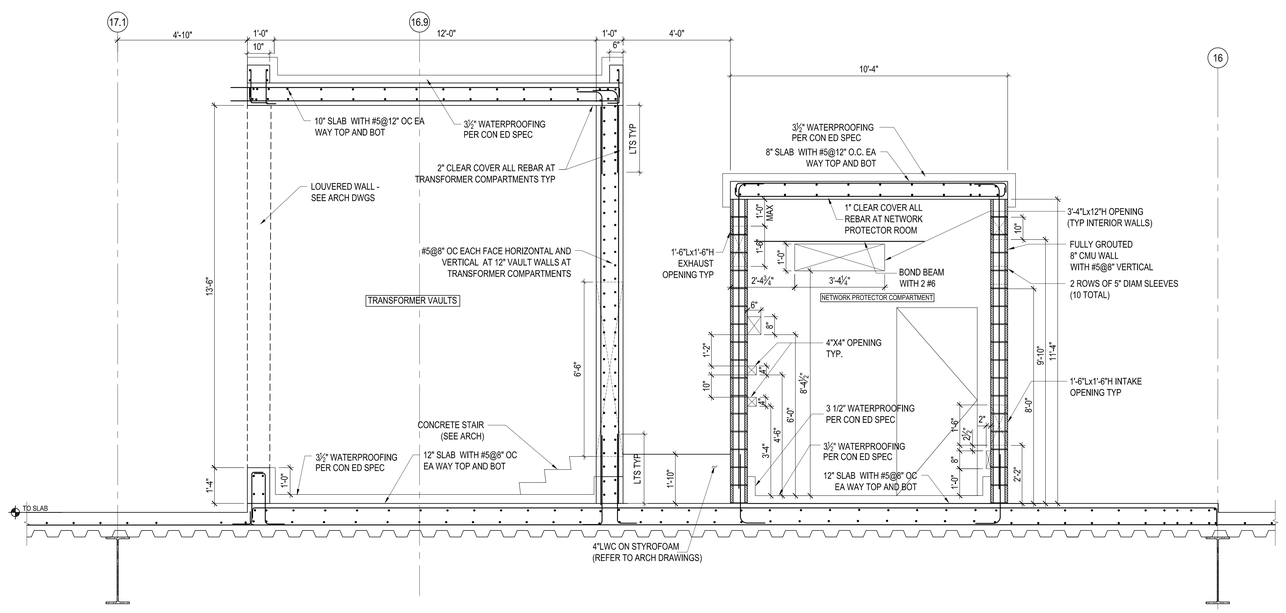

3 SECTION THROUGH CON EDISON VAULTS
1/2"=1'-0"

TRANSFORMER COMPARTMENT SPECIFICATIONS

MATERIAL SPECIFICATIONS

ALL REINFORCING BARS SHALL BE BILLET STEEL, INTERMEDIATE GRADE, DEFORMED, AND SHALL CONFORM TO A.S.T.M SPEC DES. A-615 GRADE 60. REINFORCING BARS SHALL BE EPOXY-COATED IN ACCORDANCE WITH A.S.T.M. SPEC. A-775.

REINFORCING BARS SHALL BE WIRE TIED AT ALL CONTACT POINTS WITH PLASTIC COATED TIE WIRE. REINFORCEMENT SUPPORTED FROM FORM WORK SHALL REST ON COATED WIRE BAR SUPPORTS. EPOXY COATING DAMAGED AS A RESULT OF HANDLING OR CUTTING SHALL BE REPAIRED WITH PATCHING MATERIAL CONFORMING TO A.S.T.M. SPEC. A-775

MINIMUM OF 5KSI CONCRETE STRENGTH TO BE USED FOR ALL CON ED VAULT WALLS AND SLABS

CONSTRUCTION SPECIFICATIONS

ALL CONCRETE MATERIAL FOR CONSTRUCTION AND PROTECTION FOR REINFORCING BARS SHALL CONFORM TO N.Y. CITY BLDG. CODE RS-10-3, ACI-318-14 SECT. 4.2.

CEMENT MORTAR SHALL BE IN ACCORDANCE WITH CON EDISON CO. SPEC. EO-100-167.

ALL REINFORCING BARS SHALL HAVE 2" MINIMUM CONCRETE PROTECTION UON.

ALL REINFORCING BARS SHALL CLEAR ALL CONDUIT OPENINGS BY 4" MIN ON ALL SIDES.

NETWORK PROTECTOR COMPARTMENT SPECIFICATIONS

CONSTRUCTION SPECIFICATIONS

ALL REINFORCING BARS SHALL CLEAR ALL CONDUIT OPENINGS BY 4" MIN ON ALL SIDES.

4 VAULT AND TRANSFORMER GENERAL NOTES
NOTE: REFER TO ARCH. DWGS. FOR DIMENSIONS.

Damian Titus
NYC Buildings
APPROVED
Under Directive 2 of 1975
AMENDED APPLICATION
Date: 05/09/2017
NYC Development Hub

HUDSON YARDS - RETAIL PODIUM AND TOWER A

500 WEST 33RD STREET
New York, NY

Client
Related Companies
60 Columbus Circle
New York, NY 10023
TEL: 212.801.1000 FAX: 212.801.1048

Oxford Properties Group
320 Park Avenue, 17th Floor
New York, NY 10022
TEL: 212.986.7514 FAX: 212.986.7510

Architect
Kohn Pedersen Fox Associates
11 West 42nd Street
New York, New York 10036
TEL: 212.977.6500 FAX: 212.956.2526

Structural Engineer
Thornton Tomasetti, Inc.
51 Madison Avenue
New York, New York 10010
TEL: 917.661.7800 FAX: 718.661.7801

Mechanical, Electrical, Plumbing, Fire Protection
Jaros Baum & Bolles Consulting Engineers
#0 Pine Street
New York, NY 10013
TEL: 212.530.9300 FAX: 212.269.5894

Retail Interior Design & Planning
Elkus-Manfredi
300 A Street
Boston, MA 02210
TEL: 617.426.1300

No.	Description	Date
2	D.O.B. AMENDMENT #2	10/15/2016
1	D.O.B. BUILDING PERMIT FILING	12/10/2014

Key Plan

Issue Date: 12/10/2014
Project No. N11328.00
Drawn By
Sheet Number

HYE-TA-S6-9011

Drawing Title

CONED VAULT PART PLANS AND SECTIONS L39

Drawing Number
Drawing Number
S6-9011
B-Scan Drawing Number
S-886.01

© 2012 KOHN PEDERSEN FOX ASSOCIATES PC. All rights reserved.

S4-2001
6/7/2017 12:28:41 PM
TYPICAL STEEL BEAM DETAILS.rvt
C:\Users\ccooper\Documents\HUDSON YARDS LOCAL MODELS\TOWER A AND PODIUM\N11328.00 - Tower A & East Podium_local.rvt

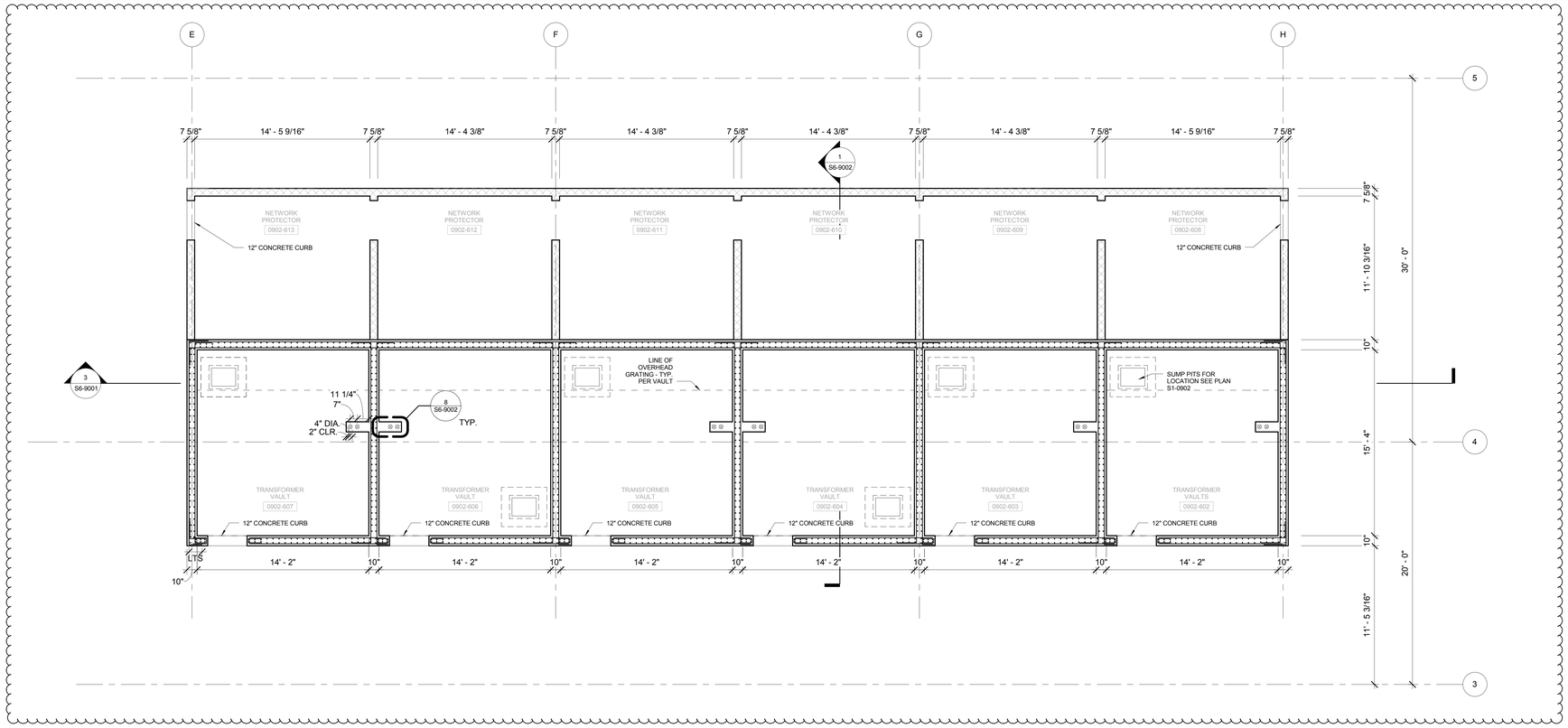

1 PART PLAN -CON EDISON VAULTS FLOOR 09
SCALE: 1/4" = 1'-0"

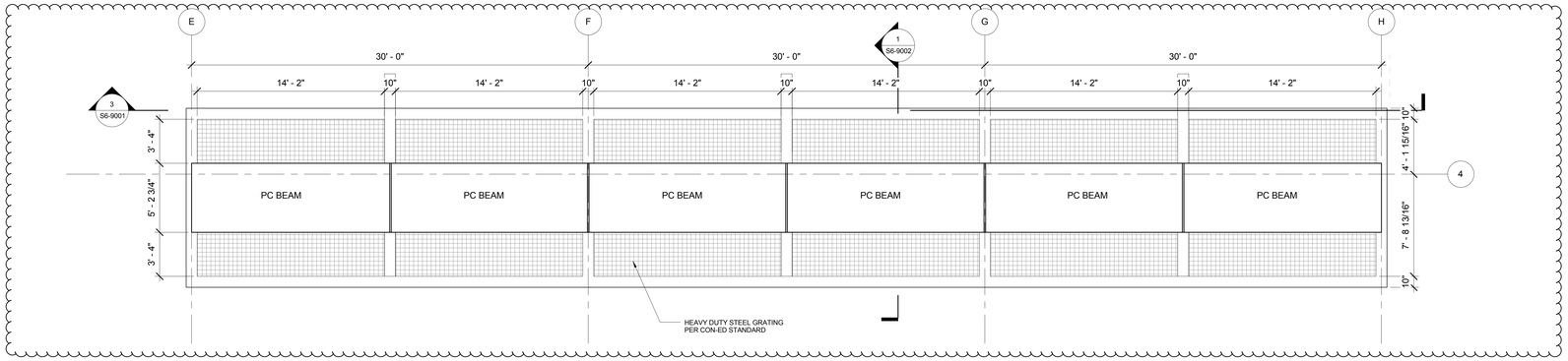

PART PLAN - FLOOR 10 TRANSFORMER VAULTS PLAN
2 SCALE: 1/4" = 1'-0"

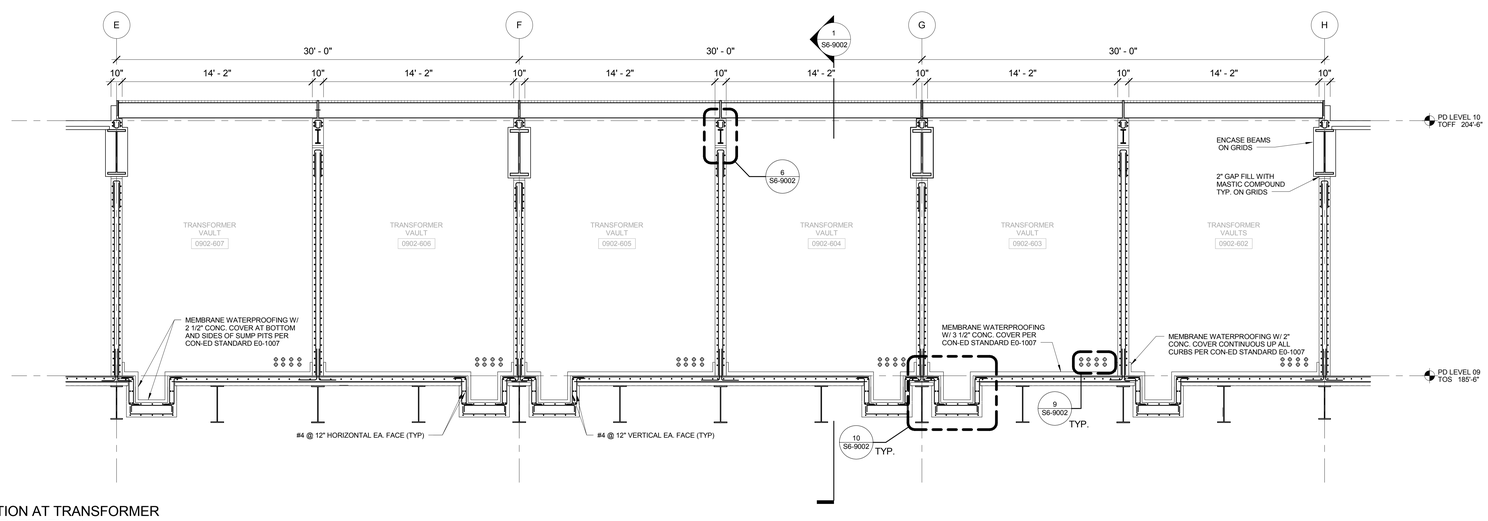

SECTION AT TRANSFORMER COMPARTMENTS
3 SCALE: 1/4" = 1'-0"

CON EDISON TRANSFORMER VAULTS AND NETWORK PROTECTOR ROOM GENERAL NOTES:

MATERIAL SPECIFICATIONS

1. ALL REINFORCING BARS SHALL BE BILLET STEEL, INTERMEDIATE GRADE, DEFORMED, AND SHALL CONFORM TO A.S.T.M. SPEC. DES. A-615 GRADE 60. REINFORCING BARS SHALL BE EPOXY-COATED IN ACCORDANCE WITH A.S.T.M. SPEC. A-775.
2. REINFORCING BARS SHALL BE WIRE TIED AT ALL CONTACT POINTS WITH PLASTIC COATED TIE WIRE. REINFORCEMENT SUPPORTED FROM FORM WORK SHALL REST ON COATED WIRE BAR SUPPORTS. EPOXY COATING DAMAGED AS A RESULT OF HANDLING OR CUTTING OF REBARS SHALL BE REPAIRED WITH PATCHING MATERIAL CONFORMING TO A.S.T.M. SPEC. A-775.

CONSTRUCTION SPECIFICATION:

1. CONCRETE MIXTURE SHALL BE 5000 P.S.I. CONCRETE MEETING ALL REQUIREMENTS OF THE 2008 N.Y. CITY BLDG. CODE, CHAPTER 19.
2. STRUCTURAL STEEL IN TRANSFORMER VAULTS SHALL BE ENCASED IN 2" OF CONCRETE PROTECTION WITH WELDED WIRE MESH.
3. ALL CONCRETE MATERIAL FOR CONSTRUCTION AND PROTECTION FOR REINFORCING BARS SHALL CONFORM TO N.Y. CITY BLDG. CODE 2008, CHAPTER 19.
4. CEMENT MORTAR SHALL BE IN ACCORDANCE WITH CON EDISON CO. SPEC. EO-100.167.
5. ALL REINFORCING BARS SHALL HAVE 2" MINIMUM CONCRETE PROTECTION UNLESS OTHERWISE NOTED.
6. ALL REINFORCING BARS SHALL CLEAR ALL CONDUIT OPENINGS BY 4" MIN ON ALL SIDES.
7. FLOORS AND EXTERIOR WALLS SHALL BE POURED CONTINUOUSLY UP TO THE HORIZONTAL WALL JOINTS TO FORM A MONOLITHIC STRUCTURE.
8. INSTALL (2) #6 BARS ABOVE ALL WALL OPENINGS (ONE PER FACE). EXTEND BARS BEYOND OPENING ON EACH END A DISTANCE LTE.

Damian Titus
Buildings
APPROVED
Under Directive 2 of 1975
AMENDED APPLICATION
Date: 05/03/2017
NYC Development Hub

0 4' 8' 16'

N

HUDSON YARDS - RETAIL PODIUM AND TOWER A

500 WEST 33RD STREET
New York, NY

Client
Related Companies
60 Columbus Circle
New York, NY 10023
TEL: 212.801.1000 FAX: 212.801.1048

Oxford Properties Group
320 Park Avenue, 17th Floor
New York, NY 10022
TEL: 212.986.7514 FAX: 212.986.7510

Architect
Kohn Pedersen Fox Associates
11 West 42nd Street
New York, New York 10036
TEL: 212.977.6500 FAX: 212.956.2526

Structural Engineer
Thornton Tomasetti, Inc.
51 Madison Avenue
New York, New York 10010
TEL: 917.661.7800 FAX: 718.661.7801

Mechanical, Electrical, Plumbing, Fire Protection
Jaros Baum & Bolles Consulting Engineers
80 Pine Street
New York, NY 10013
TEL: 212.530.9300 FAX: 212.269.5894

Retail Interior Design & Planning
Elkus-Manfredi
300 A Street
Boston, MA 02210
TEL: 617.426.1300

No.	Description	Date
2	D.O.B. AMENDMENT #2	10/15/2016
1	D.O.B. BUILDING PERMIT FILING	12/10/2014

Key Plan

09 06 03
08 05 02
07 04 01

Issue Date: 12/10/2014
Project No. N11328.00
Drawn By Author
Sheet Number

HYE -TA -S6-9001
Drawing Title

CONED VAULT PART PLAN AND SECTIONS LEVEL-09

Drawing Number
S6-9001
S-Scan Drawing Number
S-887.01

SHEET 394 OF 443

© 2013 KOHN PEDERSEN FOX ASSOCIATES PC. All rights reserved.

S6-9001 CONED VAULT PART PLAN AND SECTIONS LEVEL-09
10/27/2016 12:17:09 PM P:\NY\Projects\N11328.00\Drawings\Structural\Record\Issued\2016-10-16 - D.O.B. Amendment No.2\Revit - Rev - Removed\HYTA_S6-9001&9002.rvt

DEPT OF BUILDINGS Job Number
B1571334370 Scan Code

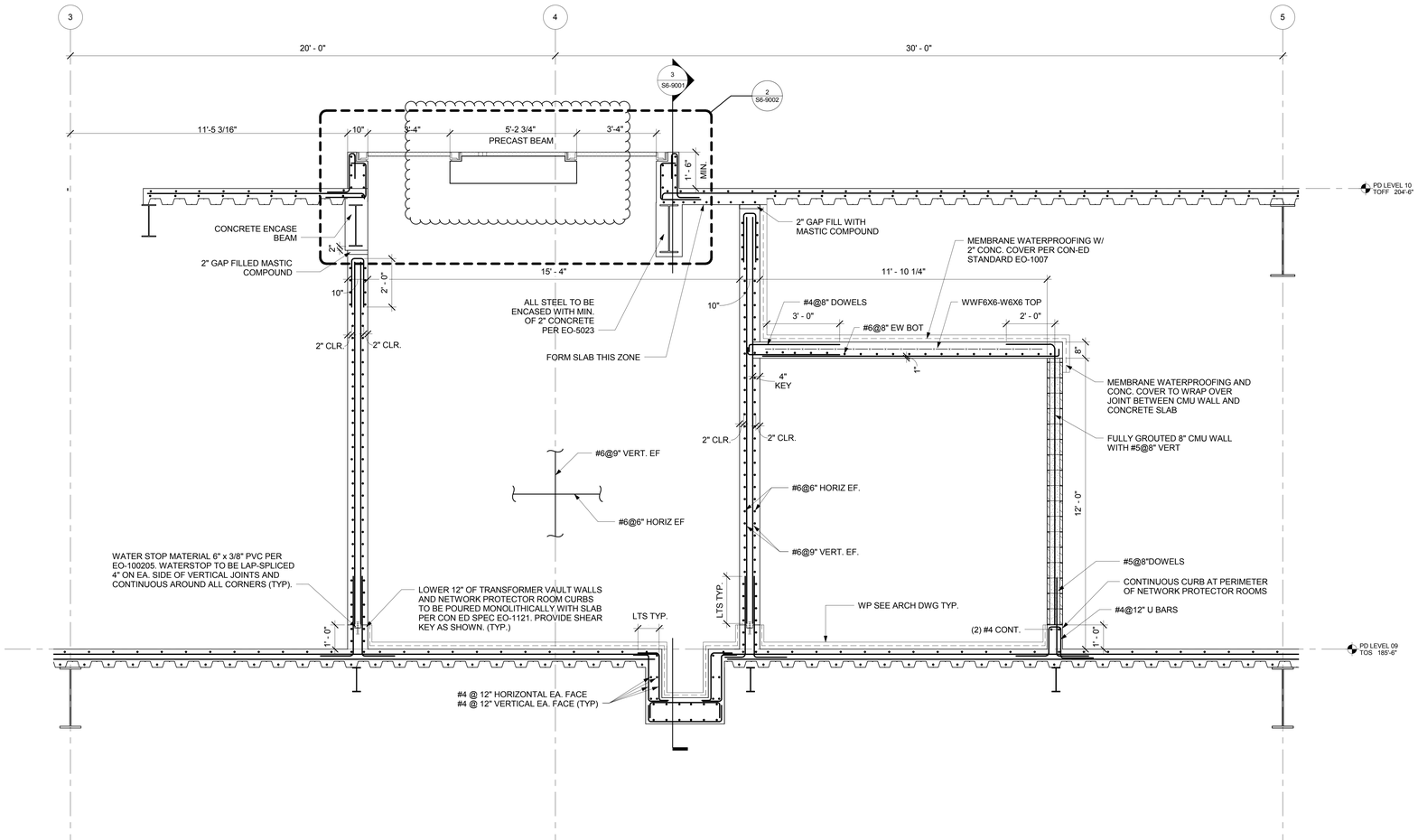

1 SECTION THROUGH CON EDISON VAULTS
SCALE: 1/2" = 1'-0"

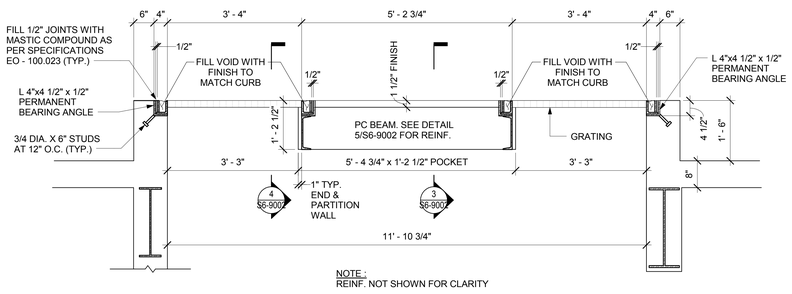

2 GRATING SUPPORT
SCALE: 3/4" = 1'-0"

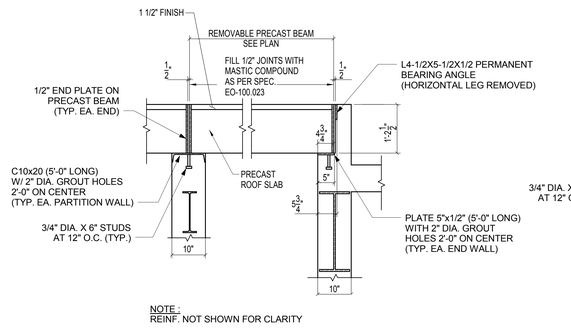

3 PRECAST SLAB SUPPORT DETAIL
SCALE: 3/4" = 1'-0"

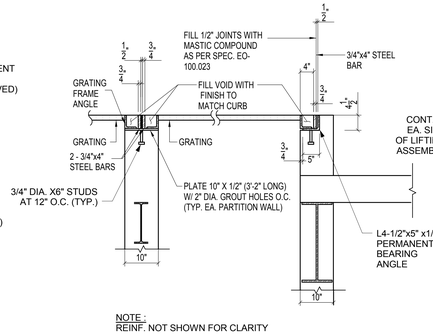

4 GRATING SUPPORT DETAIL
SCALE: 3/4" = 1'-0"

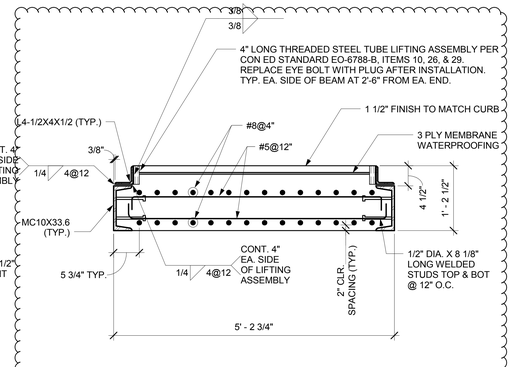

5 PRECAST BEAM DETAIL
SCALE: 1" = 1'-0"

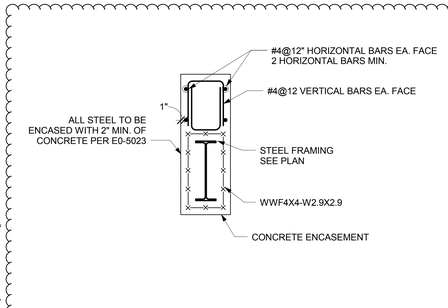

6 TYP. CONCRETE ENCASED BEAM DETAIL
SCALE: 3/4" = 1'-0"

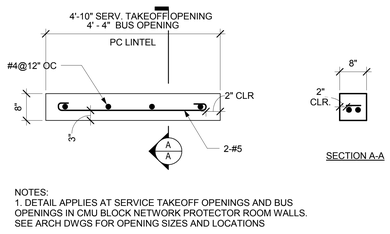

7 PRECAST CONCRETE BEAM LINTEL
SCALE: 3/4" = 1'-0"

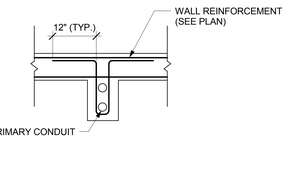

8 PRIMARY CONDUIT DETAIL
SCALE: 3/4" = 1'-0"

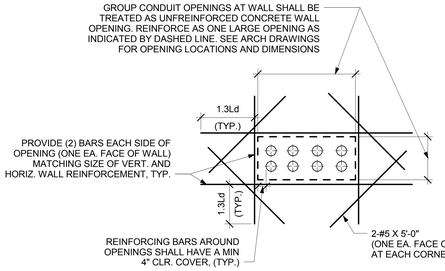

9 TYPICAL WALL OPENING
SCALE: 3/4" = 1'-0"

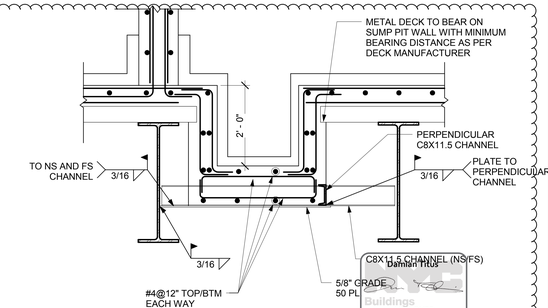

10 TYPICAL CON-ED SUMP PIT DETAIL
SCALE: 3/4" = 1'-0"

Damian Titus
Buildings
APPROVED
Under Directive 2 of 1975
METHOD APPLICATION
Date: 05/05/2017
NYC Development Hub

0 4 8 16

N

HUDSON YARDS - RETAIL PODIUM AND TOWER A
500 WEST 33RD STREET
New York, NY

Client
Related Companies
60 Columbus Circle
New York, NY 10023
TEL: 212.801.1000 FAX: 212.801.1048

Oxford Properties Group
320 Park Avenue, 17th Floor
New York, NY 10022
TEL: 212.986.7514 FAX: 212.986.7510

Architect
Kohn Pedersen Fox Associates
11 West 42nd Street
New York, New York 10036
TEL: 212.977.6500 FAX: 212.956.2526

Structural Engineer
Thornton Tomasetti, Inc.
51 Madison Avenue
New York, New York 10010
TEL: 917.661.7800 FAX: 718.661.7801

Mechanical, Electrical, Plumbing, Fire Protection
Jaros Baum & Bolles Consulting Engineers
80 Pine Street
New York, NY 10013
TEL: 212.530.9300 FAX: 212.269.5894

Retail Interior Design & Planning
Elkus-Manfredi
300 A Street
Boston, MA 02210
TEL: 617.426.1300

No.	Description	Date
2	D.O.B. AMENDMENT #2	10/15/2016
1	D.O.B. BUILDING PERMIT FILING	12/10/2014

Key Plan

09 06 03
08 05 02
07 04 01

Issue Date: 12/10/2014
Project No. N11328.00
Drawn By Author
Sheet Number

HYE -TA -S6-9002
Drawing Title

CONED VAULT SECTIONS LEVEL-09

Drawing Number
S6-9002
B-Scan Drawing Number
S-888.01

© 2013 KOHN PEDERSEN FOX ASSOCIATES PC All rights reserved.

S6-9002 CONED VAULT SECTIONS LEVEL-09
10/21/2016 12:17:53 PM P:\NY\Projects\N11328.00\Drawings\Structural\Record\Issued\2016-10-18 - D.O.B. Amendment No 2\Revit - Rev. Removed\HYTA_S6-9001&9002.rvt

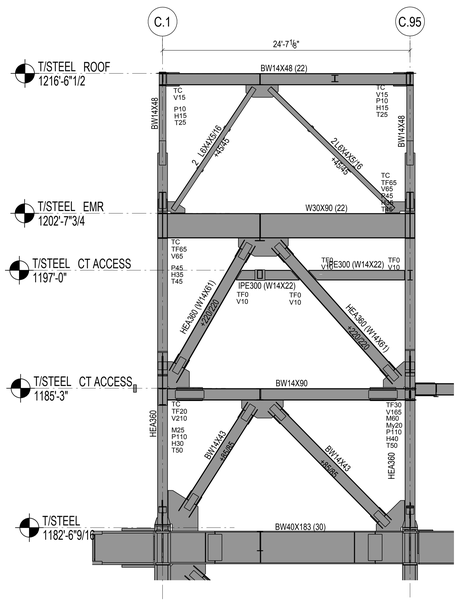

1 SA-1 / SA-2 BANK NORTH ELEVATION
NOT TO SCALE

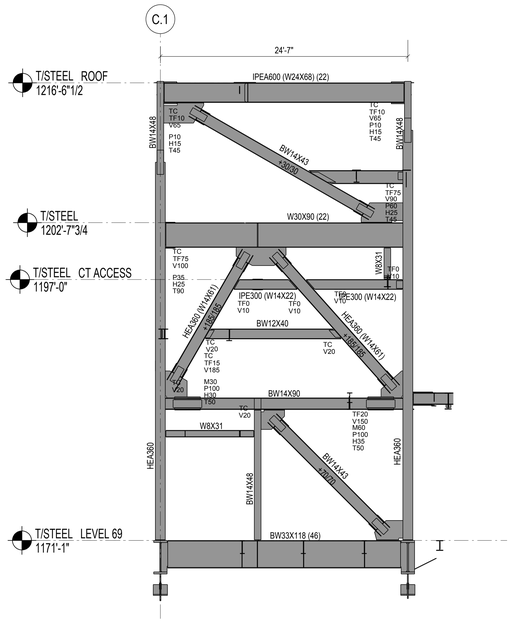

2 SA-1 / SA-2 BANK SOUTH ELEVATION
NOT TO SCALE

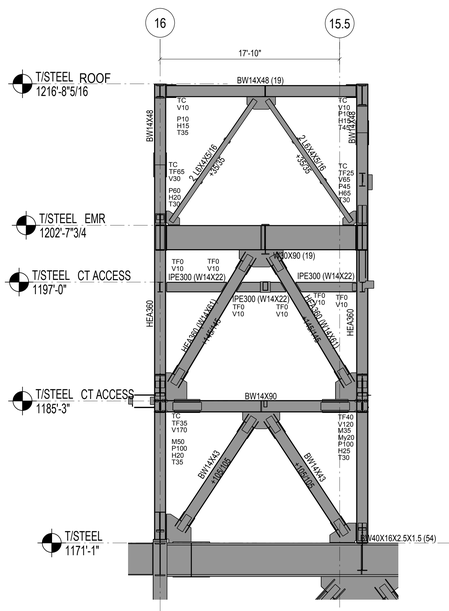

3 SA-1 / SA-2 BANK EAST ELEVATION
NOT TO SCALE

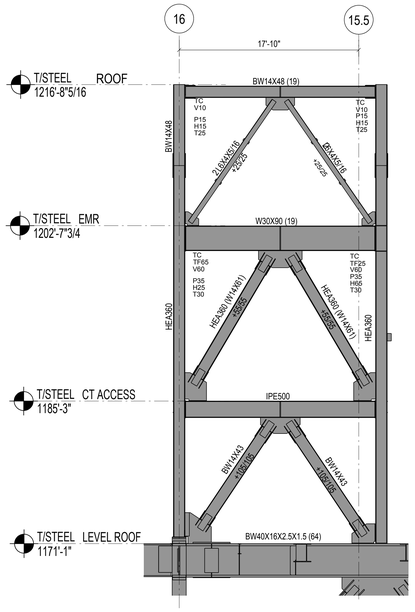

4 SA-1 / SA-2 BANK WEST ELEVATION
NOT TO SCALE

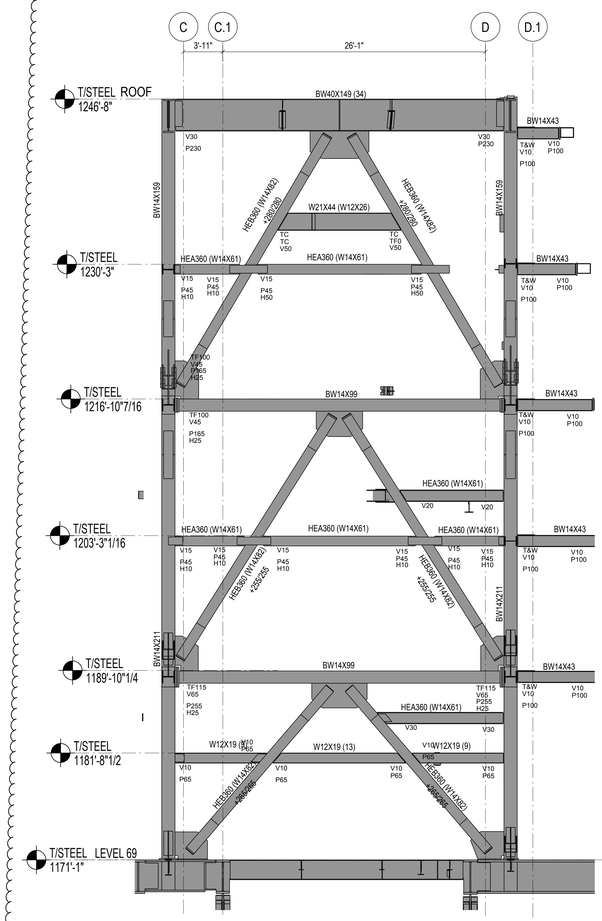

6 MASS DAMPER NORTH BRACE ELEVATION
3/16"=1'-0"

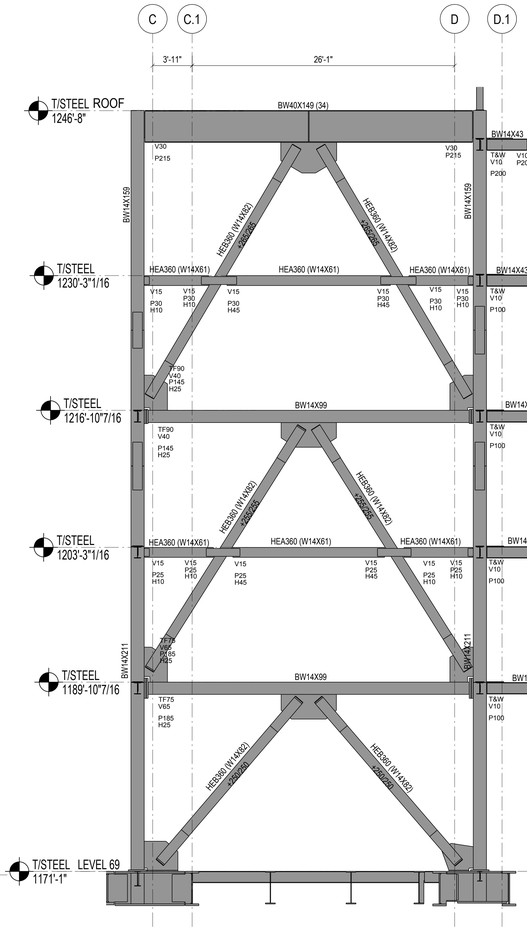

7 MASS DAMPER SOUTH BRACE ELEVATION
3/16"=1'-0"

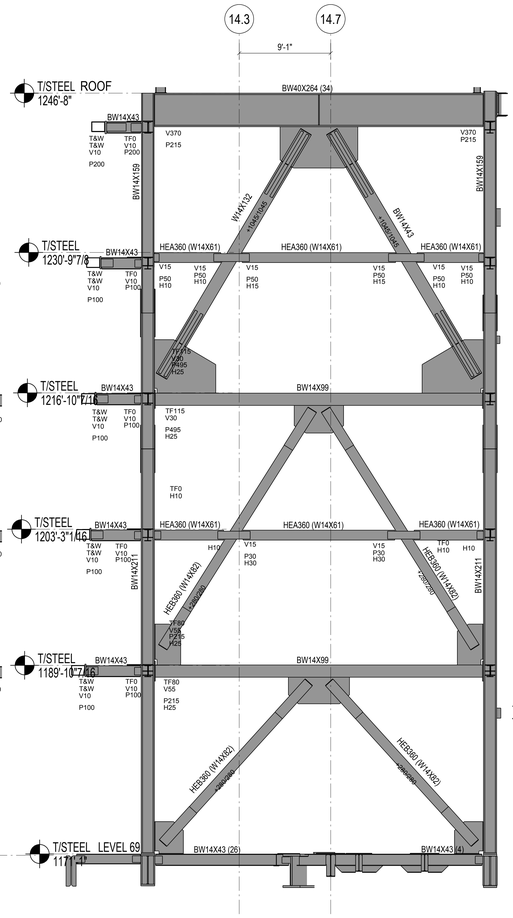

8 MASS DAMPER EAST BRACE ELEVATION
3/16"=1'-0"

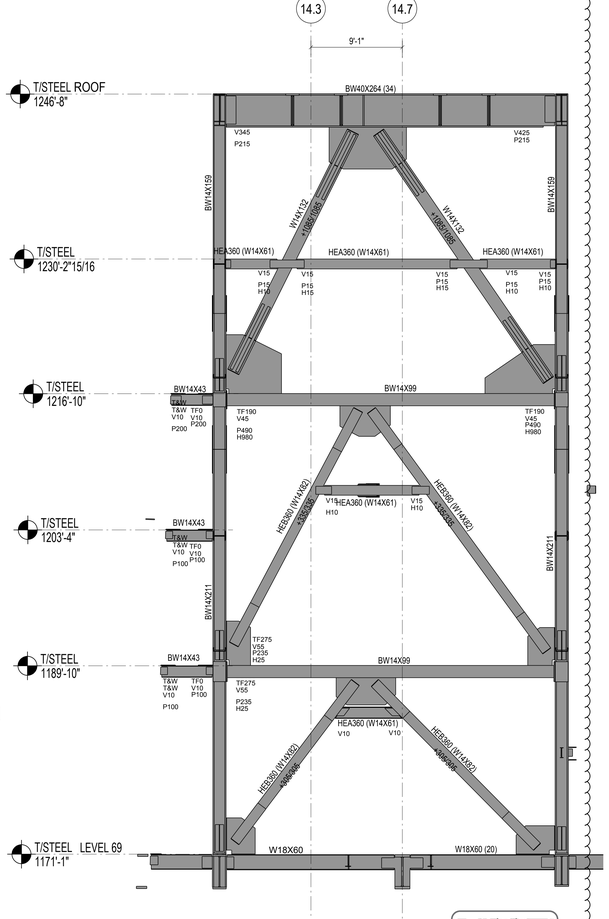

9 MASS DAMPER WEST BRACE ELEVATION
3/16"=1'-0"

Damian Titus
APPROVED
Under Directive 2 of 1975
AMENDED APPLICATION
Date: 05/03/2017
NYC Development Hub

HUDSON YARDS - RETAIL PODIUM AND TOWER A
500 WEST 33RD STREET
New York, NY

Client
Related Companies
60 Columbus Circle
New York, NY 10023
TEL: 212.801.1000 FAX: 212.801.1048

Oxford Properties Group
320 Park Avenue, 17th Floor
New York, NY 10022
TEL: 212.986.7514 FAX: 212.986.7510

Architect
Kohn Pedersen Fox Associates
11 West 42nd Street
New York, New York 10036
TEL: 212.977.6500 FAX: 212.956.2526

Structural Engineer
Thornton Tomasetti, Inc.
51 Madison Avenue
New York, New York 10010
TEL: 917.661.7800 FAX: 718.661.7801

Mechanical, Electrical, Plumbing, Fire Protection
Jaros Baum & Bolles Consulting Engineers
80 Pine Street
New York, NY 10013
TEL: 212.530.9300 FAX: 212.269.5894

Retail Interior Design & Planning
Elkus-Manfredi
300 A Street
Boston, MA 02210
TEL: 617.426.1300

No.	Description	Date
2	D.O.B AMENDMENT #2	10/15/2016
1	D.O.B BUILDING PERMIT FILING	12/10/2014

Key Plan

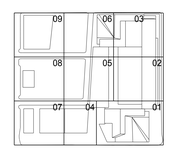

Issue Date 12/10/2014
Project No. N11328.00
Drawn By
Sheet Number

HYE-TA-S6-8001
Drawing Title

BRACED FRAME ELEVATIONS ABOVE ROOF LEVEL

Drawing Number
S6-8001
N-Scan Drawing Number
S-895.01

© 2013 KOHN PEDERSEN FOX ASSOCIATES PC. All rights reserved.

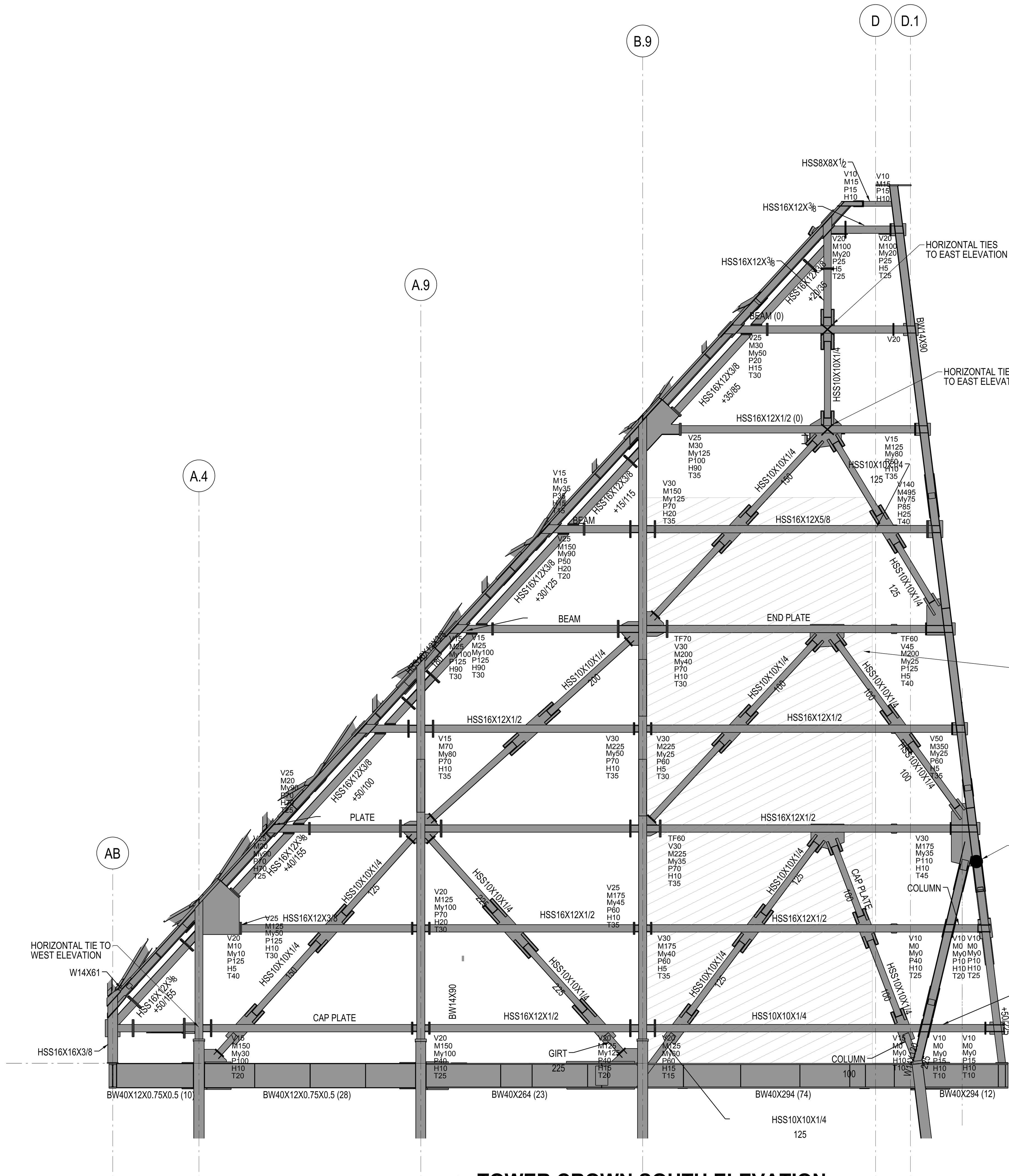

1 **TOWER CROWN SOUTH ELEVATION**
NOT TO SCALE

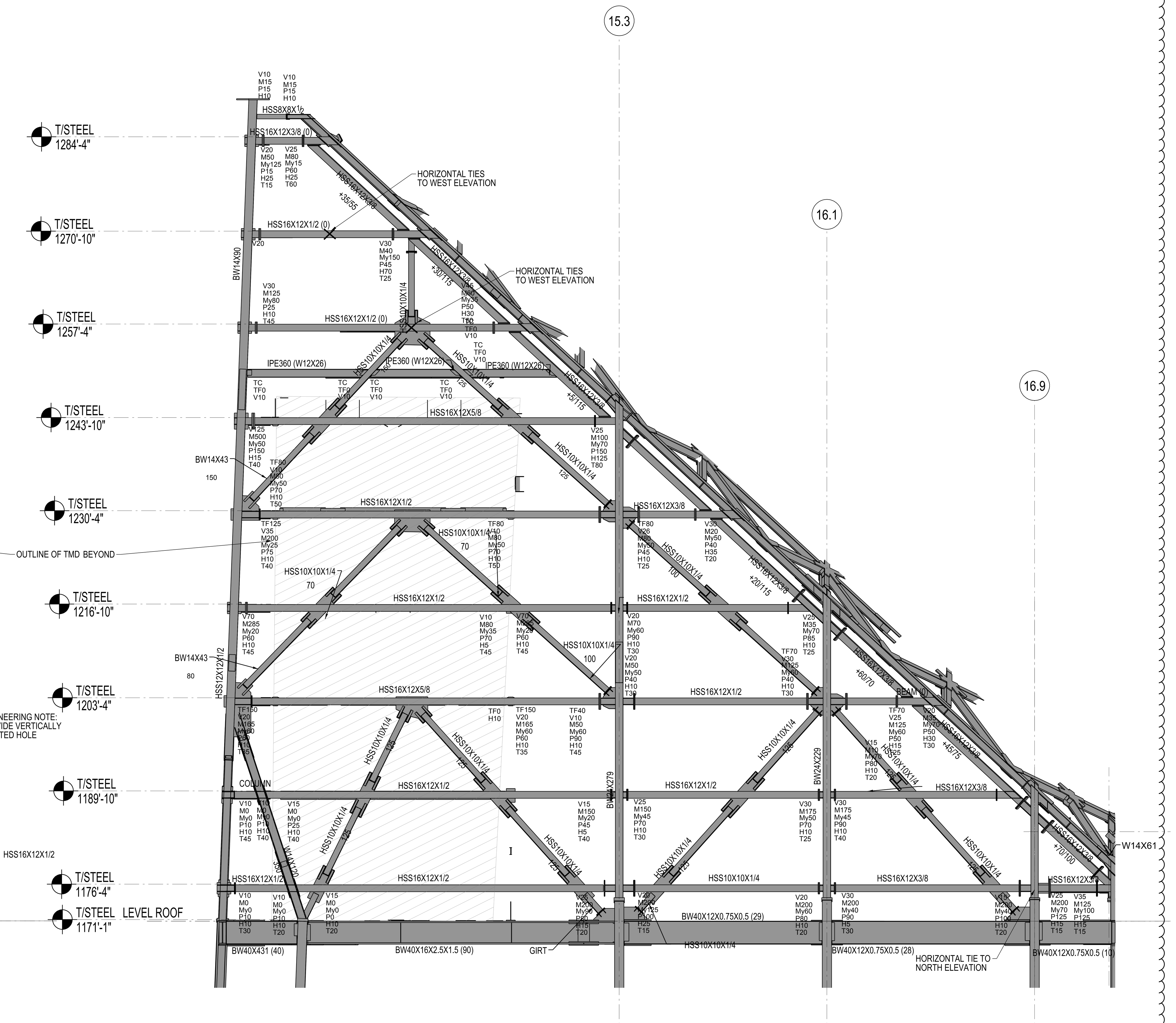

1 **TOWER CROWN EAST ELEVATION**
NOT TO SCALE

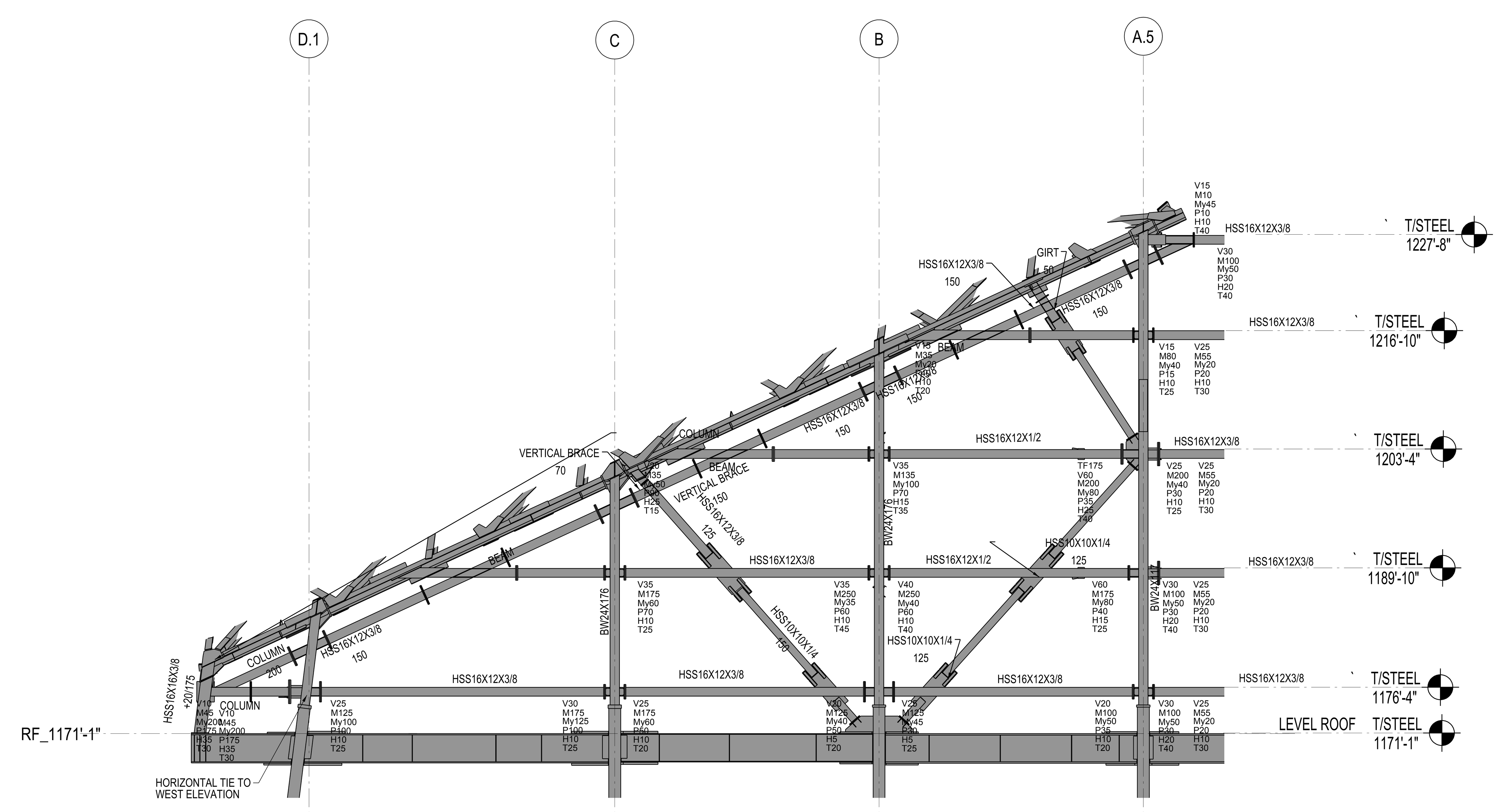

1 **TOWER CROWN NORTH ELEVATION**
NOT TO SCALE

DEPT OF BLDGS 121186251 Job Number
ES487706980 Scan Code

HUDSON YARDS - RETAIL PODIUM AND TOWER A

500 WEST 33RD STREET
New York, NY

Client
Related Companies
60 Columbus Circle
New York, NY 10023
TEL: 212.801.1000 FAX: 212.801.1048

Oxford Properties Group
320 Park Avenue, 17th Floor
New York, NY 10022
TEL: 212.986.7514 FAX: 212.986.7510

Architect
Kohn Pedersen Fox Associates
11 West 42nd Street
New York, New York 10036
TEL: 212.977.6500 FAX: 212.956.2526

Structural Engineer
Thornton Tomasetti, Inc.
51 Madison Avenue
New York, New York 10010
TEL: 917.661.7800 FAX: 718.661.7801

Mechanical, Electrical, Plumbing, Fire Protection
Jaros Baum & Bolles Consulting Engineers
80 Pine Street
New York, NY 10013
TEL: 212.530.9300 FAX: 212.269.5894

Retail Interior Design & Planning
Elkus-Manfredi
300 A Street
Boston, MA 02210
TEL: 617.426.1300

No.	Description	Date
2	D.O.B AMENDMENT #2	10/15/2016
1	D.O.B BUILDING PERMIT FILING	12/10/2014

Key Plan

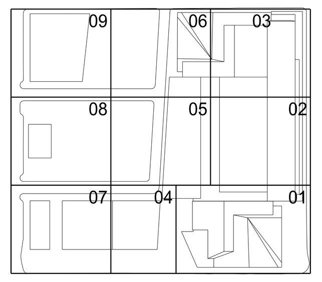

Issue Date 12/10/2014
Project No. N11328.00
Drawn By
Sheet Number

STATE OF NEW YORK · MICHAEL J. SQUARZINI · LICENSED PROFESSIONAL ENGINEER

Damian Titus
Buildings
APPROVED
Under Directive 2 of 1975
AMENDED APPLICATION
Date: 05/03/2017
NYC Development Hub

HYE-TA-S6-8002
Drawing Title

EXTERIOR AND INTERIOR CROWN BRACING ELEVATIONS I

Drawing Number
S6-8002
B-Scan Drawing Number
S-896.01
SHEET 391 OF 443

© 2013 KOHN PEDERSEN FOX ASSOCIATES PC. All rights reserved.

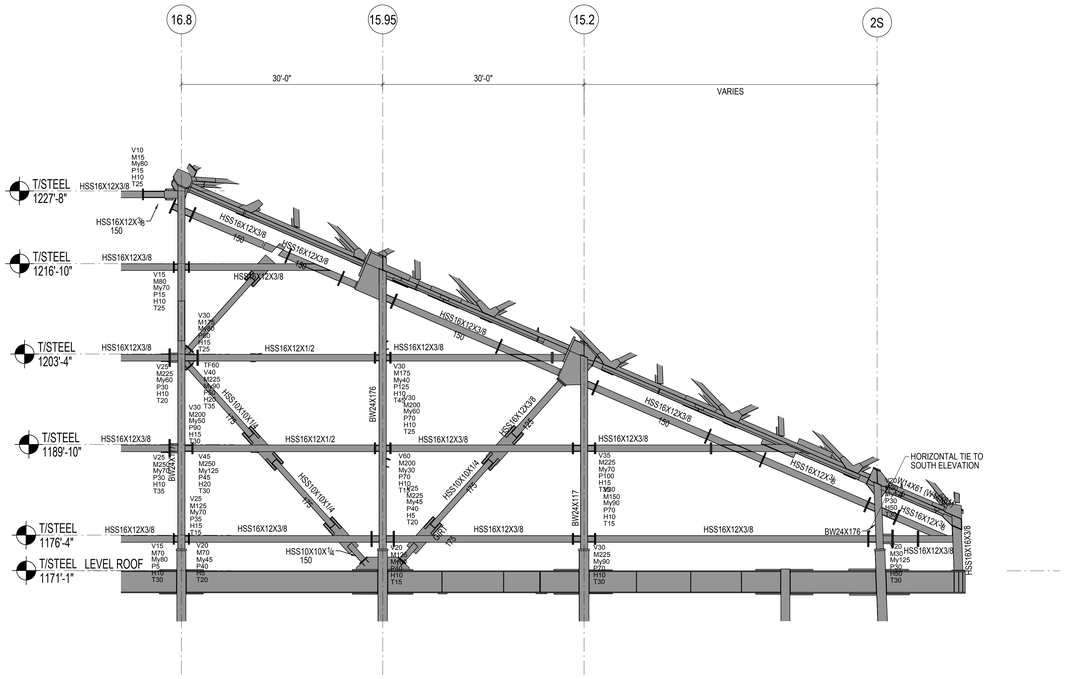

1 **TOWER CROWN WEST ELEVATION**
NOT TO SCALE

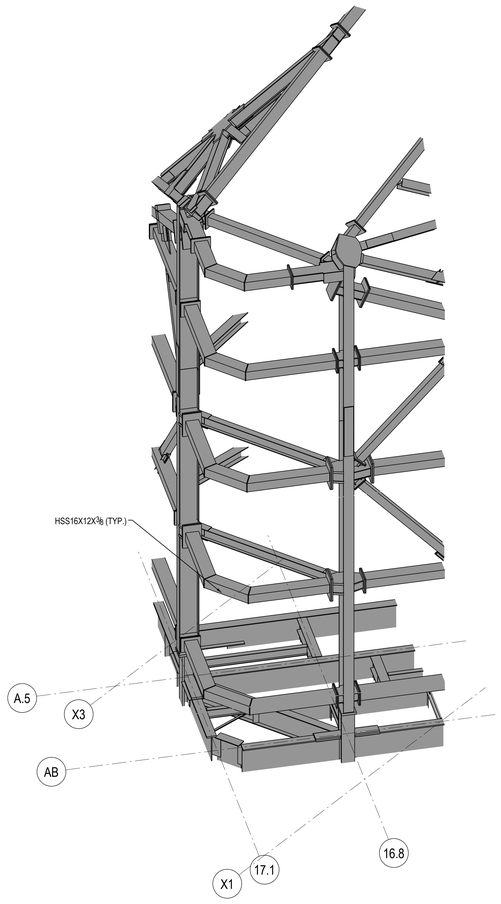

3 CROWN NORTH WEST CORNER - WIND GIRTS
NOT TO SCALE

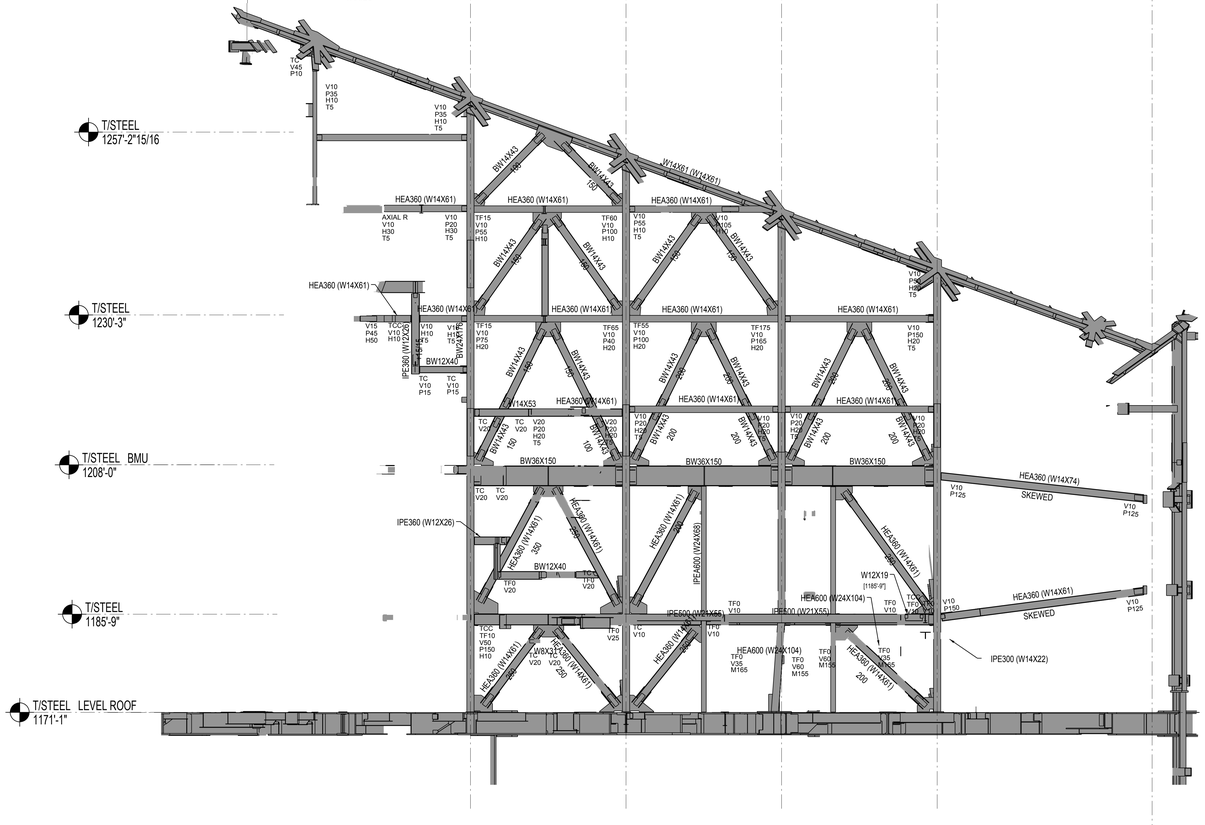

2 **TOWER CROWN ELEV GRID LINE X3**
NOT TO SCALE

Damian Titus
Buildings
APPROVED
Under Directive 2 of 1975
MANHATTAN LOCATION
Date: 05/03/2017
NYC Development Hub

HUDSON YARDS - RETAIL PODIUM AND TOWER A
500 WEST 33RD STREET
New York, NY

Client
Related Companies
60 Columbus Circle
New York, NY 10023
TEL: 212.801.1000 FAX: 212.801.1048

Oxford Properties Group
320 Park Avenue, 17th Floor
New York, NY 10022
TEL: 212.986.7514 FAX: 212.986.7510

Architect
Kohn Pedersen Fox Associates
11 West 42nd Street
New York, New York 10036
TEL: 212.977.6500 FAX: 212.956.2526

Structural Engineer
Thornton Tomasetti, Inc.
51 Madison Avenue
New York, New York 10010
TEL: 917.661.7800 FAX: 718.661.7801

Mechanical, Electrical, Plumbing, Fire Protection
Jaros Baum & Bolles Consulting Engineers
80 Pine Street
New York, NY 10013
TEL: 212.530.9300 FAX: 212.269.5894

Retail Interior Design & Planning
Elkus-Manfredi
300 A Street
Boston, MA 02210
TEL: 617.426.1300

No.	Description	Date
2	D.O.B AMENDMENT #2	10/15/2016
1	D.O.B BUILDING PERMIT FILING	12/10/2014

Key Plan

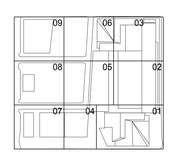

Issue Date 12/10/2014
Project No. N11328.00
Drawn By
Sheet Number

HYE-TA-S6-8003
Drawing Title

EXTERIOR AND INTERIOR CROWN BRACING ELEVATIONS II

Drawing Number
S6-8003
Revision Drawing Number
S-897.01

© 2013 KOHN PEDERSEN FOX ASSOCIATES PC. All rights reserved.

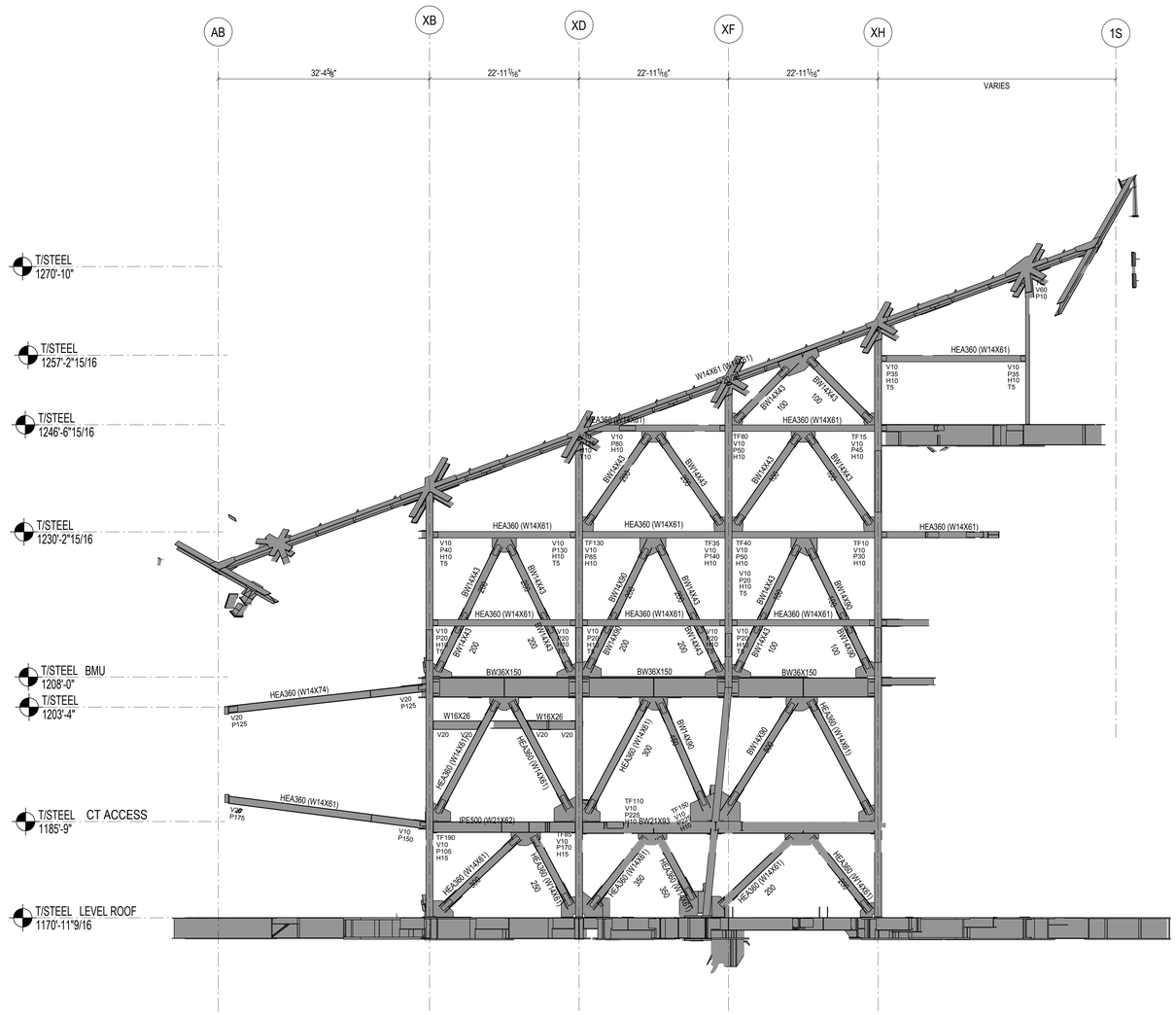

1 TOWER CROWN ELEVATION GRID LINE X1
NOT TO SCALE

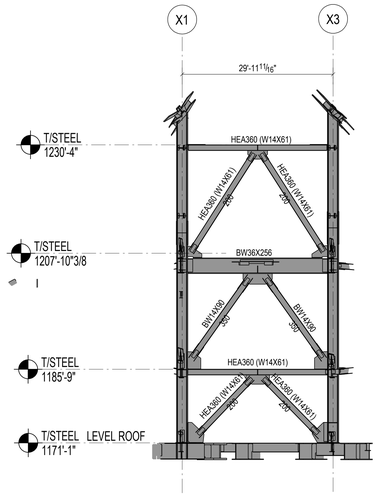

1 TOWER CROWN ELEV BETWEEN GRID LINES XA-XB
NOT TO SCALE

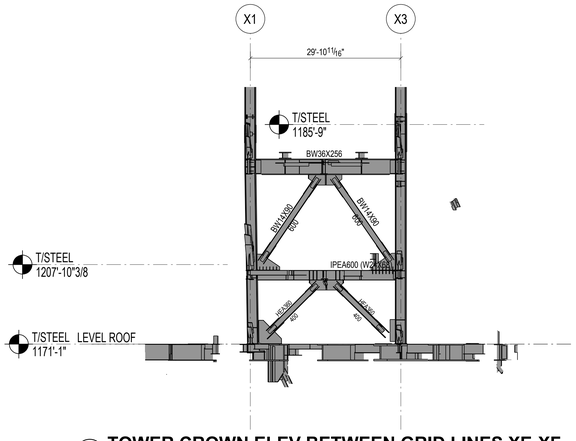

1 TOWER CROWN ELEV BETWEEN GRID LINES XE-XF
NOT TO SCALE

Damian Titus
Buildings
APPROVED
Under Directive 2 of 1975
AMENDED APPLICATION
Date: 05/03/2017
NYC Development Hub

HUDSON YARDS - RETAIL PODIUM AND TOWER A

500 WEST 33RD STREET
New York, NY

Client
Related Companies
60 Columbus Circle
New York, NY 10023
TEL: 212.801.1000 FAX: 212.801.1048

Oxford Properties Group
320 Park Avenue, 17th Floor
New York, NY 10022
TEL: 212.986.7514 FAX: 212.986.7510

Architect
Kohn Pedersen Fox Associates
11 West 42nd Street
New York, New York 10036
TEL: 212.977.6500 FAX: 212.956.2526

Structural Engineer
Thornton Tomasetti, Inc.
51 Madison Avenue
New York, New York 10010
TEL: 917.661.7800 FAX: 718.661.7801

Mechanical, Electrical, Plumbing, Fire Protection
Jaros Baum & Bolles Consulting Engineers
80 Pine Street
New York, NY 10013
TEL: 212.530.9300 FAX: 212.269.5894

Retail Interior Design & Planning
Elkus-Manfredi
300 A Street
Boston, MA 02210
TEL: 617.426.1300

No.	Description	Date
2	D.O.B AMENDMENT #2	10/15/2016
1	D.O.B BUILDING PERMIT FILING	12/10/2014

Key Plan

Issue Date 12/10/2014
Project No. N11328.00
Drawn By
Sheet Number

HYE-TA-S6-8004
Drawing Title

EXTERIOR AND INTERIOR CROWN BRACING ELEVATIONS III

Drawing Number
S6-8004
B-Scan Drawing Number
S-898.01

SHEET 393 OF 443

© 2013 KOHN PEDERSEN FOX ASSOCIATES PC. All rights reserved.

DEPT OF BLDGS 421496255 Job Number
ES2005739481 Scan Code

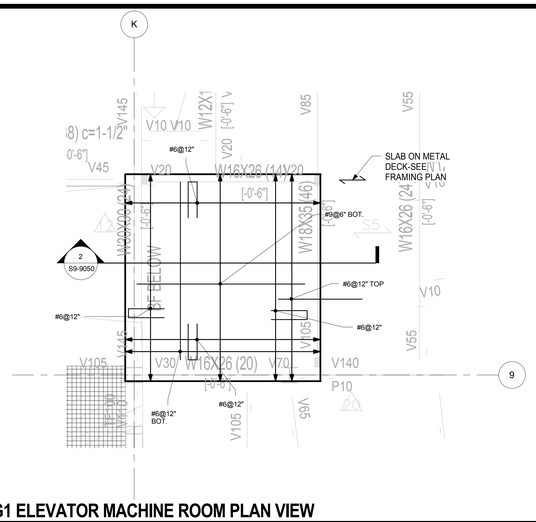

1 SG1 ELEVATOR MACHINE ROOM PLAN VIEW
NOT TO SCALE

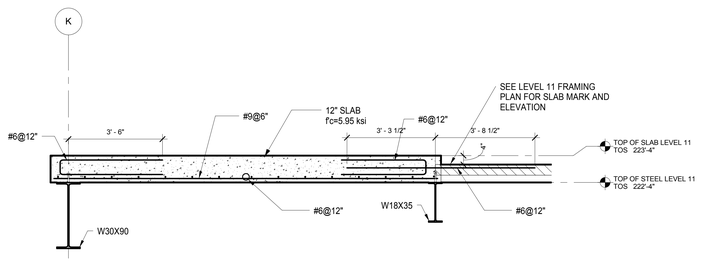

2 SG1 ELEVATOR MACHINE ROOM SLAB SECTION
NOT TO SCALE

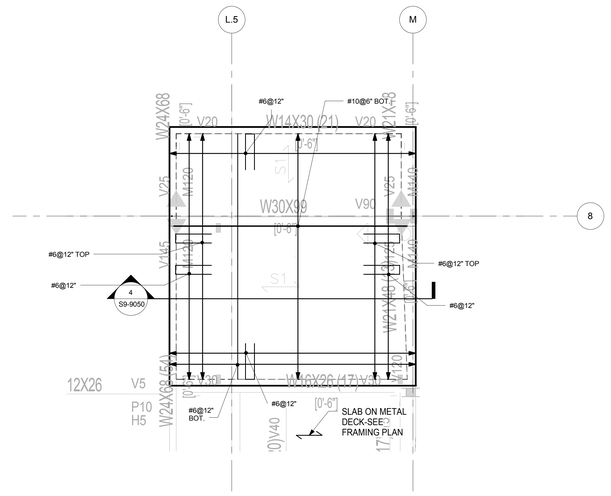

3 SD3 ELEVATOR MACHINE ROOM PLAN VIEW
NOT TO SCALE

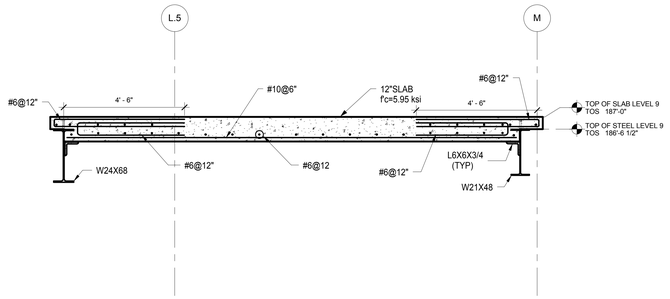

4 SD3 ELEVATOR MACHINE ROOM SLAB SECTION
NOT TO SCALE

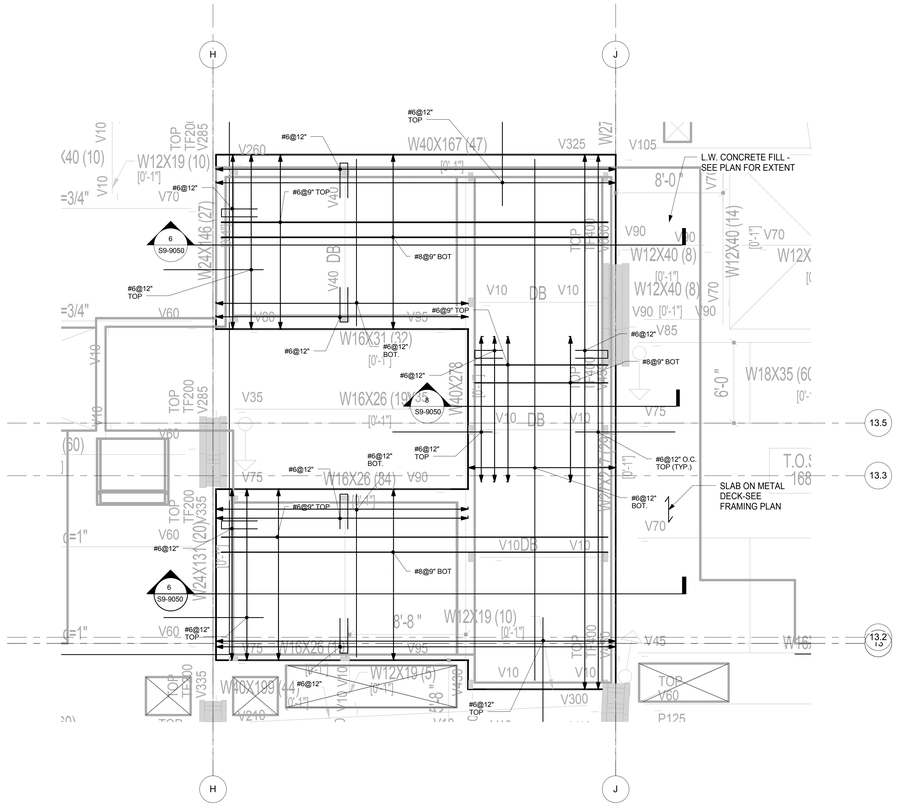

5 SC & P BANK ELEVATOR MACHINE ROOM SLABS
NOT TO SCALE

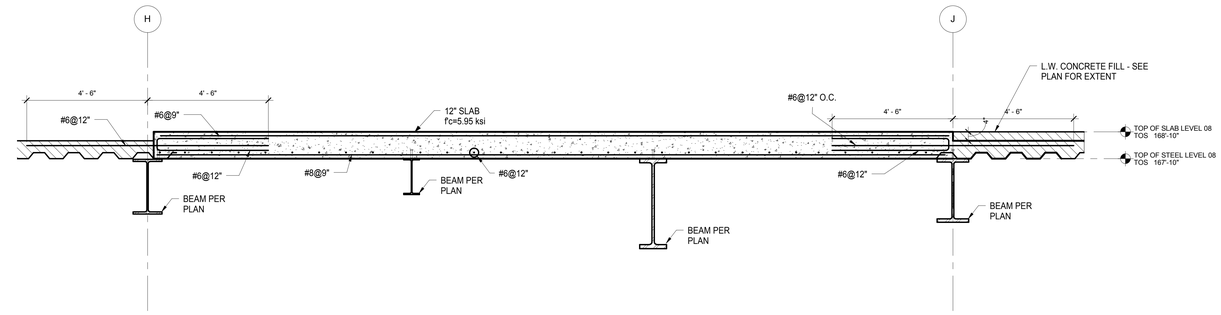

6 SC & P BANK ELEVATOR MACHINE ROOM SLAB SECTION
NOT TO SCALE

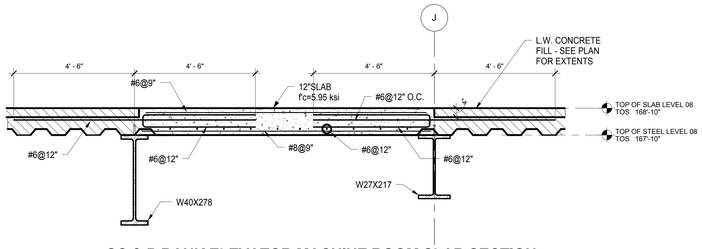

8 SC & P BANK ELEVATOR MACHINE ROOM SLAB SECTION.
NOT TO SCALE

Damian Titus
APPROVED
Under Directive 2 of 1975
AMENDED APPLICATION
Date: 09/07/2017
NYC Development Hub

0 4' 8' 16'

N

HUDSON YARDS - RETAIL PODIUM AND TOWER A

500 WEST 33RD STREET
New York, NY

Client
Related Companies
60 Columbus Circle
New York, NY 10023
TEL: 212.801.1000 FAX: 212.801.1048

Oxford Properties Group
320 Park Avenue, 17th Floor
New York, NY 10022
TEL: 212.986.7514 FAX: 212.986.7510

Architect
Kohn Pedersen Fox Associates
11 West 42nd Street
New York, New York 10036
TEL: 212.977.6500 FAX: 212.956.2526

Structural Engineer
Thornton Tomasetti, Inc.
51 Madison Avenue
New York, New York 10010
TEL: 917.661.7800 FAX: 718.661.7801

Mechanical, Electrical, Plumbing, Fire Protection
Jaros Baum & Bolles Consulting Engineers
80 Pine Street
New York, NY 10013
TEL: 212.530.9300 FAX: 212.269.5894

Retail Interior Design & Planning
Elkus-Manfredi
300 A Street
Boston, MA 02210
TEL: 617.426.1300

No.	Description	Date
1	D.O.B. AMENDMENT #2	10/15/2016

Key Plan

09 06 03
08 05 02
07 04 01

Issue Date: 10/15/2016
Project No. N11328.00
Drawn By Author
Sheet Number HYE -TA -S9-9050
Drawing Title

PODIUM ELEVATOR MACHINE ROOM DETAILS

Drawing Number
S9-9050
B-Scan Drawing Number
S-938.00

SHEET 443 OF 443

© 2013 KOHN PEDERSEN FOX ASSOCIATES PC. All rights reserved.

S9-9050
10/12/2016 2:54:54 PM
PODIUM ELEVATOR MACHINE ROOM DETAILS
P:\NY1\Projects\N11328.00\Drawings\Structural\Revit\Issued\2016-10-18 - D.O.B. Amendment No.2\Revit - Rev. Removed\HYTA PD_SLABS_COORDINATION.rvt

DEPT OF BLDGS 421490025 Job Number
ES0205431 Scan Code

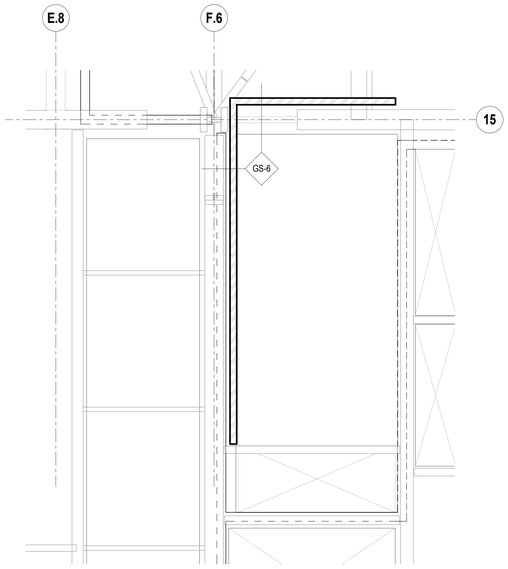

1 PART PLAN - STAIR C - TYPICAL LEVELS 22 - 24
1/4" = 1'-0"

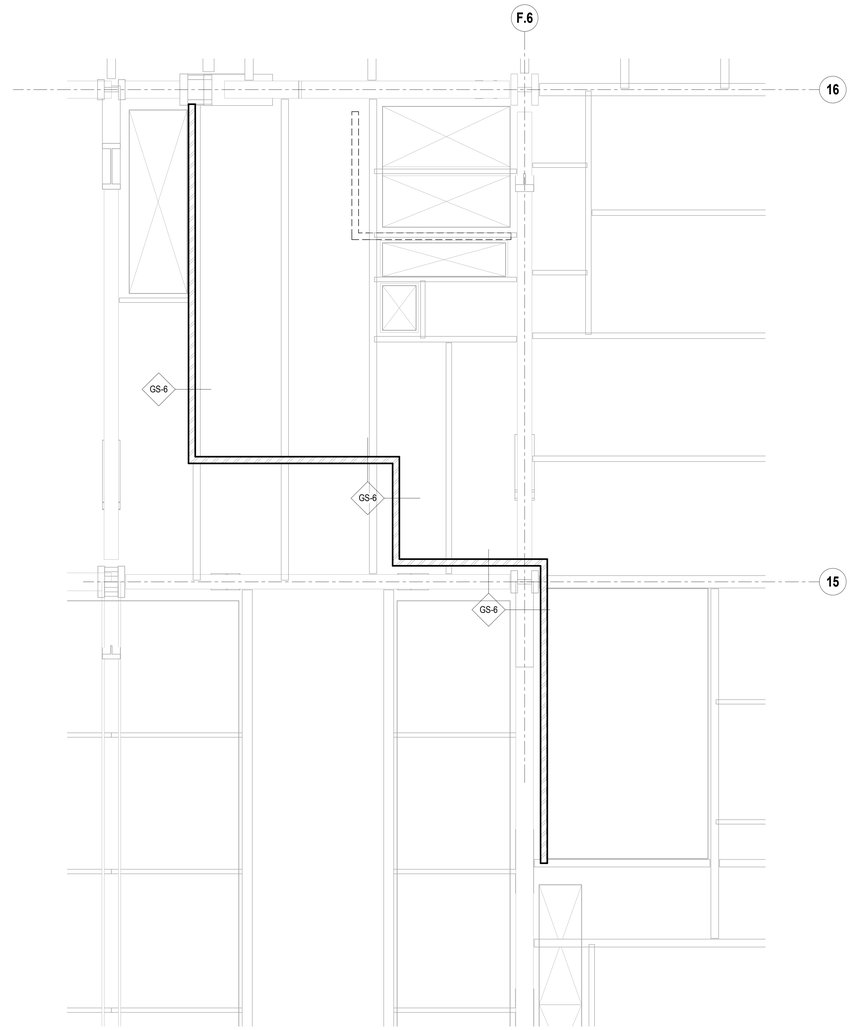

2 PART PLAN - STAIR C - LEVEL 25
1/4" = 1'-0"

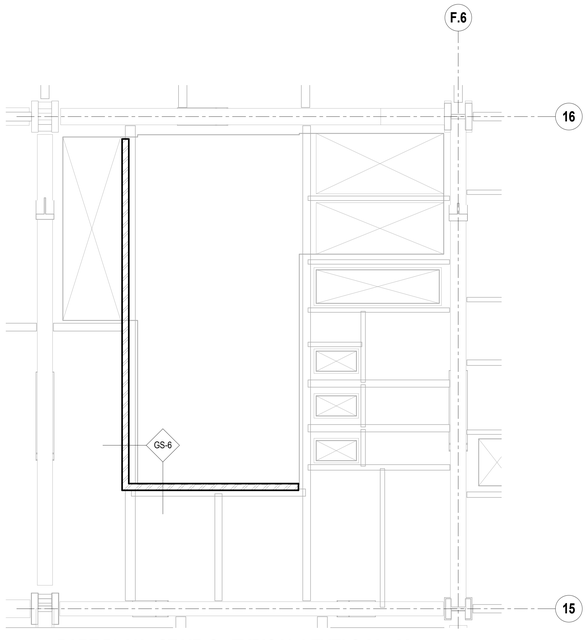

3 PART PLAN - STAIR C - TYPICAL LEVELS 26 - 38
1/4" = 1'-0"

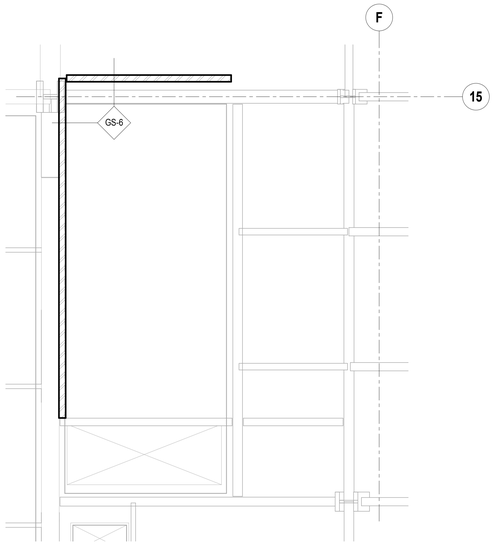

4 PART PLAN - STAIR C - TYPICAL LEVELS 40 - 53
1/4" = 1'-0"

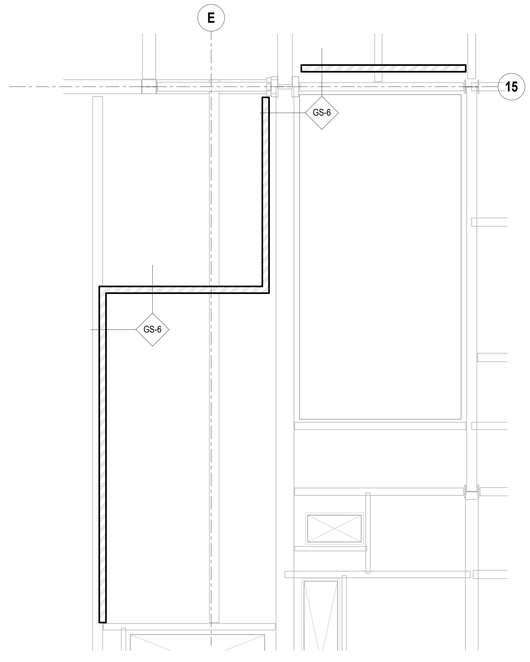

5 PART PLAN - STAIR C - LEVEL 54
1/4" = 1'-0"

SHEET NOTES:

1. S8 SERIES DRAWINGS IDENTIFY SPECIAL WALLS.
2. SEE ARCHITECTURAL DRAWINGS FOR ALL WALL LOCATIONS AND FINISHES. SPECIAL WALLS SHOWN HERE MAY NOT REFLECT THE FULL WALL THICKNESS OR MAKE-UP AND ARE INTENDED TO CONVEY THE STRUCTURAL PROPERTIES ONLY. WALL PENETRATIONS FOR DOORWAYS / MEP SERVICES ARE NOT SHOWN ON THE S8-SERIES DRAWINGS.
3. SEE S1 SERIES DRAWINGS FOR FLOOR FRAMING. FRAMING SHOWN IN GREY ON S8 SERIES DRAWINGS IS INCLUDED FOR REFERENCE ONLY.
4. SEE S4 SERIES DRAWINGS FOR TYPICAL MASONRY NON-BEARING WALL DETAILS.
5. SEE S4 SERIES DRAWINGS FOR TYPICAL COMPOSITE DECK DETAILS NOT SHOWN OR INDICATED ON THE S8 SERIES DRAWINGS.
6. TYPICAL DETAILS ARE PROVIDED FOR SPECIAL WALL OPENINGS. ALL OPENINGS THAT DO NOT FALL WITHIN PARAMETERS OF THE TYPICAL DETAILS MUST BE APPROVED BY THE STRUCTURAL ENGINEER.
7. CORNERS AND INTERSECTIONS OF SPECIAL CONCRETE WALLS SHALL HAVE A BOND BREAK UON. SEE DETAIL 8/S8-2002 FOR TYPICAL BOND BREAK DETAILS.
8. CONCRETE STRENGTH OF SPECIAL WALLS SHALL MEET THE FOLLOWING 28-DAY COMPRESSIVE STRENGTHS (f'c), UON:
   CONCRETE WALLS 5,000 PSI
   STEEL PLATE WALLS 5,000 PSI
9. STEEL AND CONNECTION MATERIALS FOR SPECIAL WALLS SHALL CONFORM TO THE MINIMUM REQUIREMENTS AS INDICATED IN THE STRUCTURAL GENERAL NOTES EXCEPT AS FOLLOWS:
   ANGLES: ASTM A572, MINIMUM YIELD STRENGTH 50 KSI
   STEEL WALL PLATES: ASTM A572, MINIMUM YIELD STRENGTH 50 KSI
   COLD-FORMED STUDS: MINIMUM YIELD STRENGTH 50 KSI
10. THE FOLLOWING NOMENCLATURE AND TABLES ARE USED TO IDENTIFY THE STRUCTURAL MAKE-UP OF THE SPECIAL WALLS:

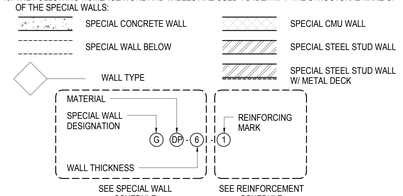

11. SEE S8-2001 AND S8-2002 FOR TYPICAL CONNECTION DETAILS FOR SPECIAL CONCRETE WALLS.
12. SEE S8-2003 FOR TYPICAL CONNECTION DETAILS FOR SPECIAL MASONRY WALLS.
13. SEE S8-2005 FOR TYPICAL CONNECTION DETAILS FOR STEEL SANDWICH PLATE WALLS.
14. SEE S8-2006 FOR TYPICAL CONNECTION DETAILS FOR SPECIAL COLD FORMED STEEL STUD WALLS.

SPECIAL WALL SCHEDULE

WALL ID	WALL THICKNESS (IN)	WALL MATERIAL	COMMENTS
GC-24	24	CONCRETE	
GC-20	20	CONCRETE	
GC-16	16	CONCRETE	
GC-12	12	CONCRETE	
GC-8	8	CONCRETE	
GC-7.5	7 1/2	CONCRETE	
GM-8	8	CMU	16" BLOCK LENGTH, TYP 18" BLOCK LENGTH, ALT.
GSP-8.5	8 1/2	STEEL SANDWICH PLATE	8" CONC CORE W/ (1) 1/2" THICK STL PLATE
GDP-8.75	8 3/4	STEEL SANDWICH PLATE	7" CONC CORE BETWEEN (2) 7/8" THICK STL PLATES
GDP-6	6	STEEL SANDWICH PLATE	5" CONC CORE BETWEEN (2) 1/2" THICK STL PLATES
GD-16	16	COLD-FORMED STEEL STUD W/ 1 1/2" 20 GA METAL DECK	1600S300-97 STUDS @ 12" O.C. UON
GS-6	6	COLD-FORMED STEEL STUD W/ GWB	600S250-97 STUDS @ 16" O.C. UON

REINFORCEMENT SCHEDULE

MARK	VERT BARS		HORIZ BARS*	
	BAR SIZE	BAR SPACING (IN)	BAR SIZE	BAR SPACING (IN)
1	6	12	6	12
2	6	8	6	12
3	6	6	6	12
4	6	4	6	12
5	5	24	5	24
6	5	16	5	16
7	5	12	5	12
8	5	8	5	12
9	5	6	5	12
10	5	4	5	12

* HORIZONTAL BAR CALL OUTS ARE SPECIFICALLY FOR SPECIAL CONCRETE WALLS. SPECIAL MASONRY WALLS TO HAVE STANDARD LADDER MESH JOINT REINFORCEMENT EVERY OTHER COURSE.

HUDSON YARDS - RETAIL PODIUM AND TOWER A

500 WEST 33RD STREET
New York, NY

Client
Related Companies
60 Columbus Circle
New York, NY 10023
TEL: 212.801.1000 FAX: 212.801.1048

Oxford Properties Group
320 Park Avenue, 17th Floor
New York, NY 10022
TEL: 212.986.7514 FAX: 212.986.7510

Architect
Kohn Pedersen Fox Associates
11 West 42nd Street
New York, New York 10036
TEL: 212.977.6500 FAX: 212.956.2526

Structural Engineer
Thornton Tomasetti, Inc.
51 Madison Avenue
New York, New York 10010
TEL: 917.661.7800 FAX: 718.661.7801

Mechanical, Electrical, Plumbing, Fire Protection
Jaros Baum & Bolles Consulting Engineers
80 Pine Street
New York, NY 10013
TEL: 212.530.9300 FAX: 212.269.5894

Retail Interior Design & Planning
Elkus-Manfredi
300 A Street
Boston, MA 02210
TEL: 617.426.1300

No.	Description	Date
1	D.O.B. AMENDMENT #2	10/15/2016

Key Plan

Issue Date: 10/15/2016
Project No. N11328.00
Drawn By Author
Sheet Number

HYE -TA -S8-1026

Damian Titus
Buildings
APPROVED
Under Directive 1 of 1975
AMENDED APPLICATION
Date: 05/03/2017
NYC Development Hub

0 2' 4' 8'

N

STAIR C PART PLANS

Drawing Number
S8-1026
N-Scan Drawing Number
S-939.00

SHEET 410 OF 443

COPYRIGHT KOHN PEDERSEN FOX ASSOCIATES PC

S8-1026
10/19/2016 10:46:34 AM
STAIR C PART PLANS
P:\NY\Projects\N11328.00\Drawings\Structural\Record\Issued\2016-10-15 - D.O.B. Amendment No.2\Revit - Rev. Removed\HYTA_S8-series.rvt

DEPT OF BLDGS STAMPING Job Number
E1507312425 Scan Code

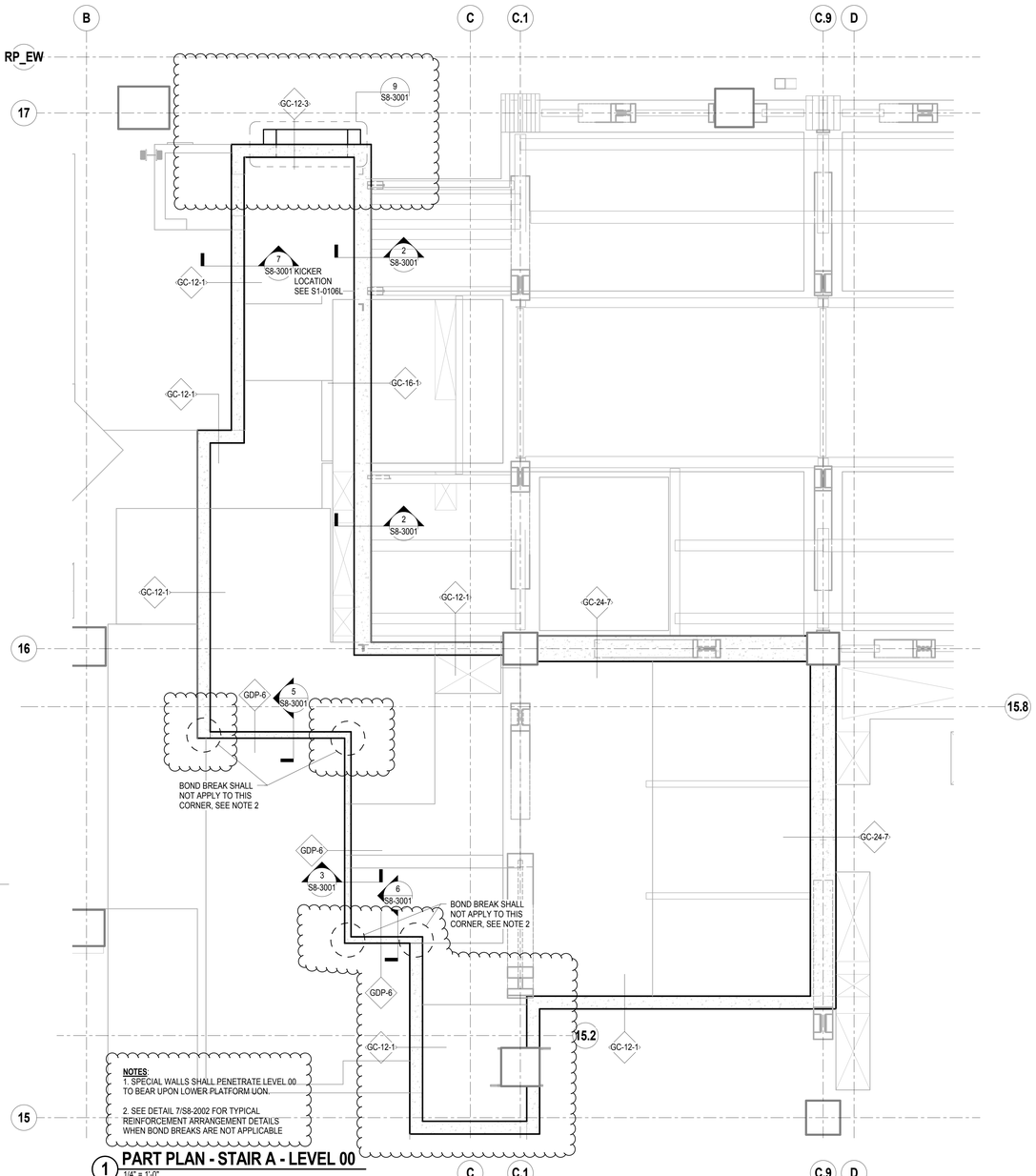

1 **PART PLAN - STAIR A - LEVEL 00**
1/4" = 1'-0"

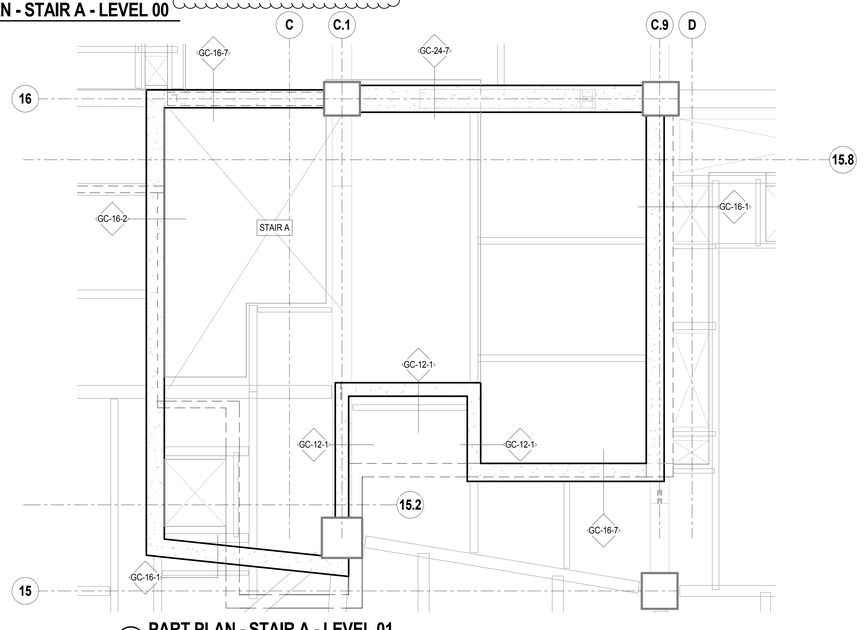

2 **PART PLAN - STAIR A - LEVEL 01**
1/4" = 1'-0"

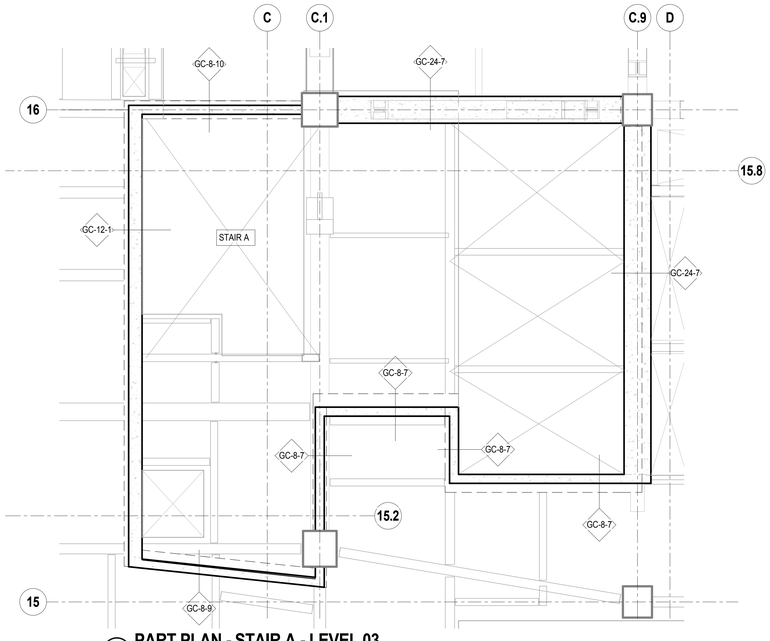

3 **PART PLAN - STAIR A - LEVEL 03**
1/4" = 1'-0"

SHEET NOTES:

1. S8 SERIES DRAWINGS IDENTIFY SPECIAL WALLS.
2. SEE ARCHITECTURAL DRAWINGS FOR ALL WALL LOCATIONS AND FINISHES. SPECIAL WALLS SHOWN HERE MAY NOT REFLECT THE FULL WALL THICKNESS OR MAKE-UP AND ARE INTENDED TO CONVEY THE STRUCTURAL PROPERTIES ONLY. WALL PENETRATIONS FOR DOORWAYS / MEP SERVICES ARE NOT SHOWN ON THE S8-SERIES DRAWINGS.
3. SEE S1 SERIES DRAWINGS FOR FLOOR FRAMING. FRAMING SHOWN IN GREY ON S8 SERIES DRAWINGS IS INCLUDED FOR REFERENCE ONLY.
4. SEE S4 SERIES DRAWINGS FOR TYPICAL MASONRY NON-BEARING WALL DETAILS.
5. SEE S4 SERIES DRAWINGS FOR TYPICAL COMPOSITE DECK DETAILS NOT SHOWN OR INDICATED ON THE S8 SERIES DRAWINGS.
6. TYPICAL DETAILS ARE PROVIDED FOR SPECIAL WALL OPENINGS. ALL OPENINGS THAT DO NOT FALL WITHIN PARAMETERS OF THE TYPICAL DETAILS MUST BE APPROVED BY THE STRUCTURAL ENGINEER.
7. CORNERS AND INTERSECTIONS OF SPECIAL CONCRETE WALLS SHALL HAVE A BOND BREAK UON. SEE DETAIL 8/S8-2002 FOR TYPICAL BOND BREAK DETAILS.
8. CONCRETE STRENGTH OF SPECIAL WALLS SHALL MEET THE FOLLOWING 28-DAY COMPRESSIVE STRENGTHS (f'c), UON:
   - CONCRETE WALLS 5,000 PSI
   - STEEL PLATE WALLS 5,000 PSI
9. STEEL AND CONNECTION MATERIALS FOR SPECIAL WALLS SHALL CONFORM TO THE MINIMUM REQUIREMENTS AS INDICATED IN THE STRUCTURAL GENERAL NOTES EXCEPT AS FOLLOWS:
   - ANGLES: ASTM A572, MINIMUM YIELD STRENGTH 50 KSI
   - STEEL WALL PLATES: ASTM A572, MINIMUM YIELD STRENGTH 50 KSI
   - COLD-FORMED STUDS: MINIMUM YIELD STRENGTH 50 KSI
10. THE FOLLOWING NOMENCLATURE AND TABLES ARE USED TO IDENTIFY THE STRUCTURAL MAKE-UP OF THE SPECIAL WALLS:

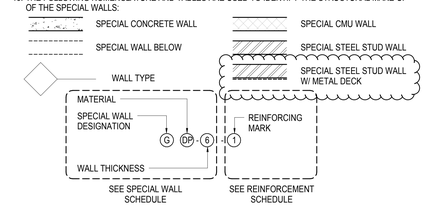

11. SEE S8-2001 AND S8-2002 FOR TYPICAL CONNECTION DETAILS FOR SPECIAL CONCRETE WALLS.
12. SEE S8-2003 FOR TYPICAL CONNECTION DETAILS FOR SPECIAL MASONRY WALLS.
13. SEE S8-2005 FOR TYPICAL CONNECTION DETAILS FOR STEEL SANDWICH PLATE WALLS.
14. SEE S8-2006 FOR TYPICAL CONNECTION DETAILS FOR SPECIAL COLD FORMED STEEL STUD WALLS.

SPECIAL WALL SCHEDULE

WALL ID	WALL THICKNESS (IN)	WALL MATERIAL	COMMENTS
GC-24	24	CONCRETE	
GC-20	20	CONCRETE	
GC-16	16	CONCRETE	
GC-12	12	CONCRETE	
GC-8	8	CONCRETE	
GC-7.5	7 1/2	CONCRETE	
GM-8	8	CMU	16" BLOCK LENGTH, TYP 18" BLOCK LENGTH, ALT.
GSP-8.5	8 1/2	STEEL SANDWICH PLATE	8" CONC CORE W/ (1) 1/2" THICK STL PLATE
GDP-8.75	8 3/4	STEEL SANDWICH PLATE	7" CONC CORE BETWEEN (2) 7/8" THICK STL PLATES
GDP-6	6	STEEL SANDWICH PLATE	5" CONC CORE BETWEEN (2) 1/2" THICK STL PLATES
GD-16	16	COLD-FORMED STEEL STUD W/ 1 1/2" 20 GA METAL DECK	1600S300-97 STUDS @ 12" O.C. UON
GS-6	6	COLD-FORMED STEEL STUD W/ GWB	600S250-97 STUDS @ 16" O.C. UON

REINFORCEMENT SCHEDULE

MARK	VERT BARS BAR SIZE	VERT BARS BAR SPACING (IN)	HORIZ BARS* BAR SIZE	HORIZ BARS* BAR SPACING (IN)
1	6	12	6	12
2	6	8	6	12
3	6	6	6	12
4	6	4	6	12
5	5	24	5	24
6	5	16	5	16
7	5	12	5	12
8	5	8	5	12
9	5	6	5	12
10	5	4	5	12

* HORIZONTAL BAR CALL OUTS ARE SPECIFICALLY FOR SPECIAL CONCRETE WALLS. SPECIAL MASONRY WALLS TO HAVE STANDARD LADDER MESH JOINT REINFORCEMENT EVERY OTHER COURSE.

Damian Titus
Buildings
APPROVED
Under Directive 2 of 1975
AMENDED APPLICATION
Date: 05/03/2017
NYC Development Hub

0 4' 8' 16'

N

HUDSON YARDS - RETAIL PODIUM AND TOWER A

500 WEST 33RD STREET
New York, NY

Client
Related Companies
60 Columbus Circle
New York, NY 10023
TEL: 212.801.1000 FAX: 212.801.1048

Oxford Properties Group
320 Park Avenue, 17th Floor
New York, NY 10022
TEL: 212.986.7514 FAX: 212.986.7510

Architect
Kohn Pedersen Fox Associates
11 West 42nd Street
New York, New York 10036
TEL: 212.977.6500 FAX: 212.956.2526

Structural Engineer
Thornton Tomasetti, Inc.
51 Madison Avenue
New York, New York 10010
TEL: 917.661.7800 FAX: 718.661.7801

Mechanical, Electrical, Plumbing, Fire Protection
Jaros Baum & Bolles Consulting Engineers
80 Pine Street
New York, NY 10013
TEL: 212.530.9300 FAX: 212.269.5894

Retail Interior Design & Planning
Elkus-Manfredi
300 A Street
Boston, MA 02210
TEL: 617.426.1300

No.	Description	Date
2	D.O.B. AMENDMENT #2	10/15/2016
1	D.O.B. BUILDING PERMIT FILING	12/10/2014

Key Plan

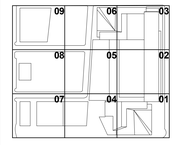

Issue Date: 12/10/2014
Project No.: N11328.00
Drawn By: Author
Sheet Number

HYE -TA -S8-1001

Drawing Title

STAIR A PART PLANS

Drawing Number
S8-1001
B-Scan Drawing Number
S-951.01

© 2013 KOHN PEDERSEN FOX ASSOCIATES PC All rights reserved.

S8-1001 10/19/2016 10:43:54 AM STAIR A PART PLANS P:\NY\Project\N11328.00\Drawings\Structural\Record\Issued\2016-10-16 - D.O.B. Amendment No.2\Revit - Rev. Removed\HYTA_S8-series.rvt

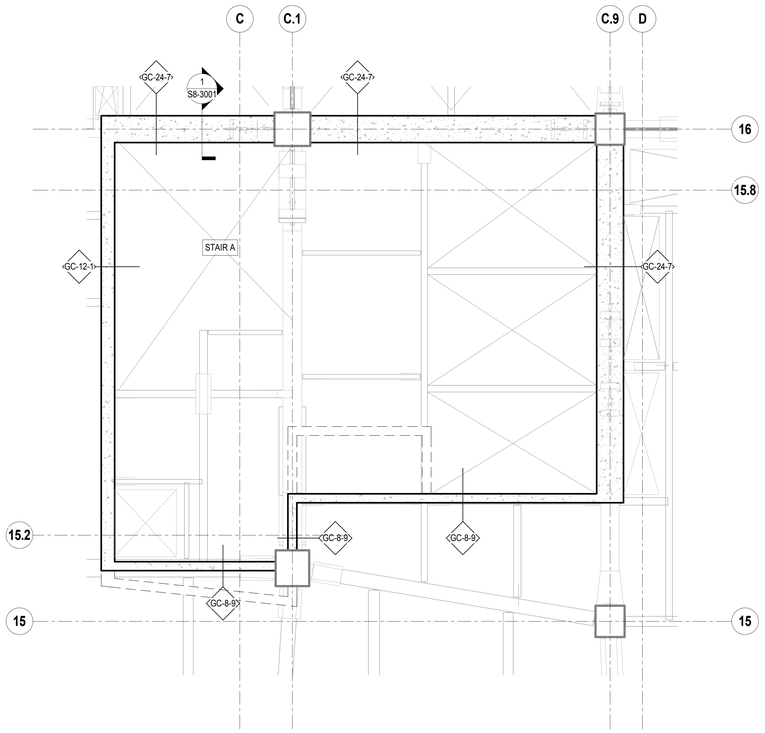

1 PART PLAN - STAIR A - LEVEL 04
1/4" = 1'-0"

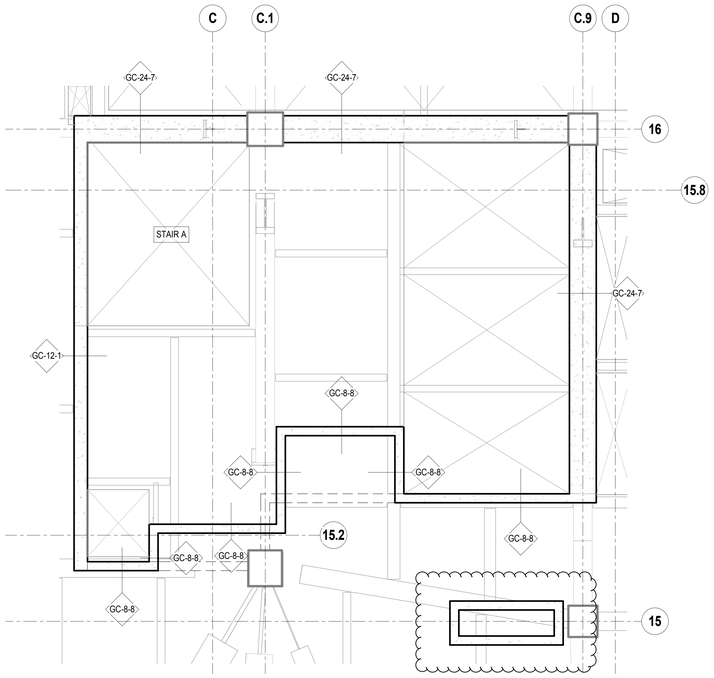

2 PART PLAN - STAIR A - LEVEL 05
1/4" = 1'-0"

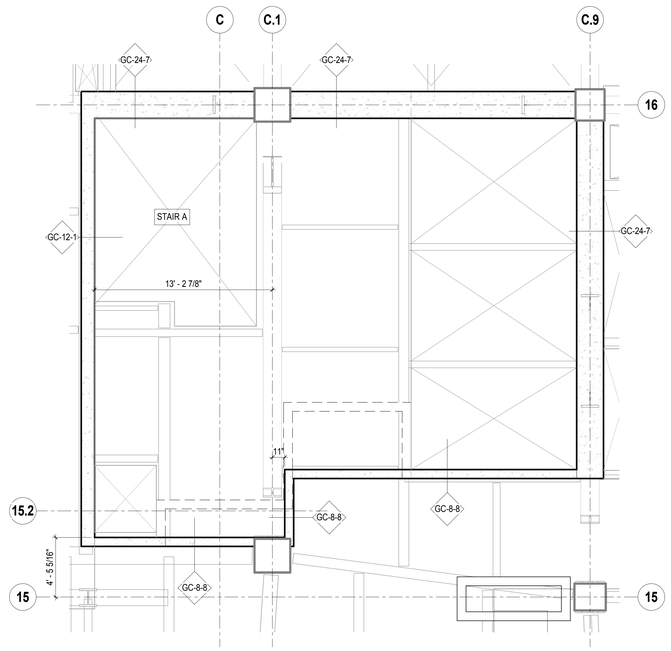

3 PART PLAN - STAIR A - LEVEL 06
1/4" = 1'-0"

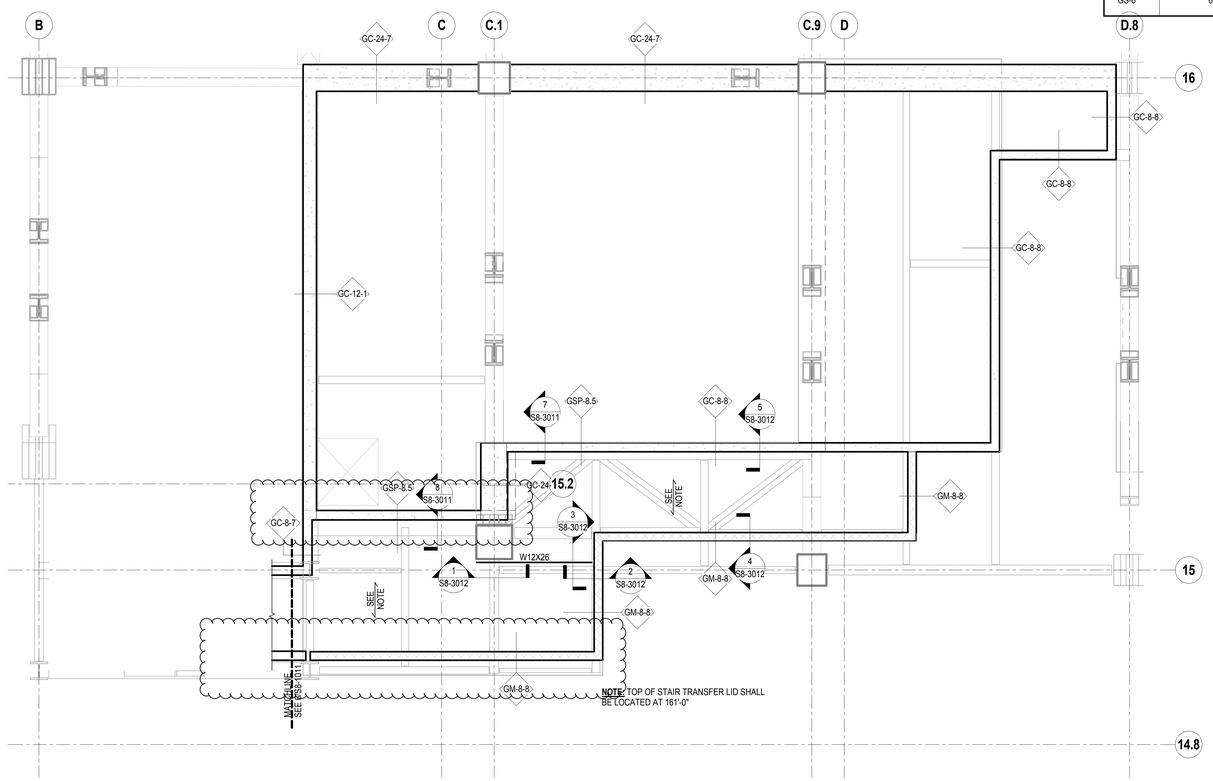

4 PART PLAN - STAIR A / STAIR B - LEVEL 6U
1/4" = 1'-0"

SHEET NOTES:

1. S8 SERIES DRAWINGS IDENTIFY SPECIAL WALLS.
2. SEE ARCHITECTURAL DRAWINGS FOR ALL WALL LOCATIONS AND FINISHES. SPECIAL WALLS SHOWN HERE MAY NOT REFLECT THE FULL WALL THICKNESS OR MAKE-UP AND ARE INTENDED TO CONVEY THE STRUCTURAL PROPERTIES ONLY. WALL PENETRATIONS FOR DOORWAYS / MEP SERVICES ARE NOT SHOWN ON THE S8-SERIES DRAWINGS.
3. SEE S1 SERIES DRAWINGS FOR FLOOR FRAMING. FRAMING SHOWN IN GREY ON S8 SERIES DRAWINGS IS INCLUDED FOR REFERENCE ONLY.
4. SEE S4 SERIES DRAWINGS FOR TYPICAL MASONRY NON-BEARING WALL DETAILS.
5. SEE S4 SERIES DRAWINGS FOR TYPICAL COMPOSITE DECK DETAILS NOT SHOWN OR INDICATED ON THE S8 SERIES DRAWINGS.
6. TYPICAL DETAILS ARE PROVIDED FOR SPECIAL WALL OPENINGS. ALL OPENINGS THAT DO NOT FALL WITHIN PARAMETERS OF THE TYPICAL DETAILS MUST BE APPROVED BY THE STRUCTURAL ENGINEER.
7. CORNERS AND INTERSECTIONS OF SPECIAL CONCRETE WALLS SHALL HAVE A BOND BREAK UON. SEE DETAIL 8/S8-2002 FOR TYPICAL BOND BREAK DETAILS.
8. CONCRETE STRENGTH OF SPECIAL WALLS SHALL MEET THE FOLLOWING 28-DAY COMPRESSIVE STRENGTHS (f'c), UON:
   - CONCRETE WALLS 5,000 PSI
   - STEEL PLATE WALLS 5,000 PSI
9. STEEL AND CONNECTION MATERIALS FOR SPECIAL WALLS SHALL CONFORM TO THE MINIMUM REQUIREMENTS AS INDICATED IN THE STRUCTURAL GENERAL NOTES EXCEPT AS FOLLOWS:
   - ANGLES: ASTM A572, MINIMUM YIELD STRENGTH 50 KSI
   - STEEL WALL PLATES: ASTM A572, MINIMUM YIELD STRENGTH 50 KSI
   - COLD-FORMED STUDS: MINIMUM YIELD STRENGTH 50 KSI
10. THE FOLLOWING NOMENCLATURE AND TABLES ARE USED TO IDENTIFY THE STRUCTURAL MAKE-UP OF THE SPECIAL WALLS:

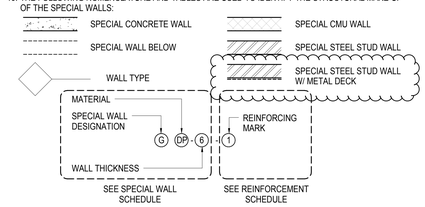

11. SEE S8-2001 AND S8-2002 FOR TYPICAL CONNECTION DETAILS FOR SPECIAL CONCRETE WALLS.
12. SEE S8-2003 FOR TYPICAL CONNECTION DETAILS FOR SPECIAL MASONRY WALLS.
13. SEE S8-2005 FOR TYPICAL CONNECTION DETAILS FOR STEEL SANDWICH PLATE WALLS.
14. SEE S8-2006 FOR TYPICAL CONNECTION DETAILS FOR SPECIAL COLD FORMED STEEL STUD WALLS.

SPECIAL WALL SCHEDULE

WALL ID	WALL THICKNESS (IN)	WALL MATERIAL	COMMENTS
GC-24	24	CONCRETE	
GC-20	20	CONCRETE	
GC-16	16	CONCRETE	
GC-12	12	CONCRETE	
GC-8	8	CONCRETE	
GC-7.5	7 1/2	CONCRETE	
GM-8	8	CMU	16" BLOCK LENGTH, TYP 18" BLOCK LENGTH, ALT.
GSP-8.5	8 1/2	STEEL SANDWICH PLATE	8" CONC CORE W/ (1) 1/2" THICK STL PLATE
GDP-8.75	8 3/4	STEEL SANDWICH PLATE	7" CONC CORE BETWEEN (2) 7/8" THICK STL PLATES
GDP-6	6	STEEL SANDWICH PLATE	5" CONC CORE BETWEEN (2) 1/2" THICK STL PLATES
GD-16	16	COLD-FORMED STEEL STUD W/ 1 1/2" 20 GA METAL DECK	1600S300-97 STUDS @ 12" O.C. UON
GS-6	6	COLD-FORMED STEEL STUD W/ GWB	600S250-97 STUDS @ 16" O.C. UON

REINFORCEMENT SCHEDULE

MARK	VERT BARS BAR SIZE	VERT BARS BAR SPACING (IN)	HORIZ BARS* BAR SIZE	HORIZ BARS* BAR SPACING (IN)
1	6	12	6	12
2	6	8	6	12
3	6	6	6	12
4	6	4	6	12
5	5	24	5	24
6	5	16	5	16
7	5	12	5	12
8	5	8	5	12
9	5	6	5	12
10	5	4	5	12

* HORIZONTAL BAR CALL OUTS ARE SPECIFICALLY FOR SPECIAL CONCRETE WALLS. SPECIAL MASONRY WALLS TO HAVE STANDARD LADDER MESH JOINT REINFORCEMENT EVERY OTHER COURSE.

Damian Titus
Buildings
APPROVED
Under Directive 2 of 1975
AMENDED APPLICATION
Date: 05/01/2017
NYC Development Hub

0 4' 8' 16'

N

HUDSON YARDS - RETAIL PODIUM AND TOWER A

500 WEST 33RD STREET
New York, NY

Client
Related Companies
60 Columbus Circle
New York, NY 10023
TEL: 212.801.1000 FAX: 212.801.1048

Oxford Properties Group
320 Park Avenue, 17th Floor
New York, NY 10022
TEL: 212.986.7514 FAX: 212.986.7510

Architect
Kohn Pedersen Fox Associates
11 West 42nd Street
New York, New York 10036
TEL: 212.977.6500 FAX: 212.956.2526

Structural Engineer
Thornton Tomasetti, Inc.
51 Madison Avenue
New York, New York 10010
TEL: 917.661.7800 FAX: 718.661.7801

Mechanical, Electrical, Plumbing, Fire Protection
Jaros Baum & Bolles Consulting Engineers
80 Pine Street
New York, NY 10013
TEL: 212.530.9300 FAX: 212.269.5894

Retail Interior Design & Planning
Elkus-Manfredi
300 A Street
Boston, MA 02210
TEL: 617.426.1300

No.	Description	Date
2	D.O.B. AMENDMENT #2	10/15/2016
1	D.O.B. BUILDING PERMIT FILING	12/10/2014

Key Plan

09 06 03
08 05 02
07 04 01

Issue Date: 12/10/2014
Project No. N11328.00
Drawn By: Author
Sheet Number

HYE -TA -S8-1002

Drawing Title

STAIR A PART PLANS

Drawing Number
S8-1002
A-Num Drawing Number
S-952.01

© 2013 KOHN PEDERSEN FOX ASSOCIATES PC. All rights reserved.

S8-1002
10/19/2016 10:44:13 AM
STAIR A PART PLANS
P:\NY\Projects\N11328.00\Drawings\Structural\Record\Issued\2016-10-19 - D.O.B. Amendment No.2\Revit - Rev. Removed\HYTA_S8-series.rvt

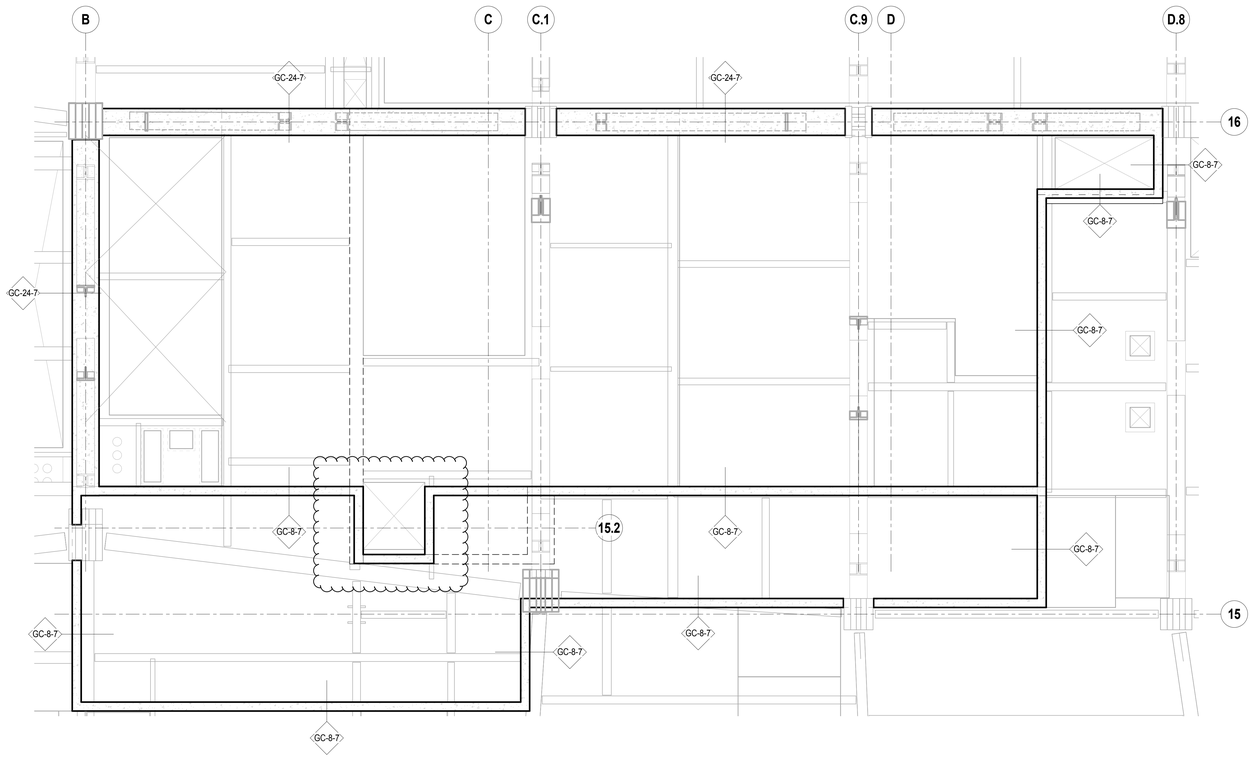

1 PART PLAN - STAIR A AND STAIR B - LEVEL 08

1/4" = 1'-0"

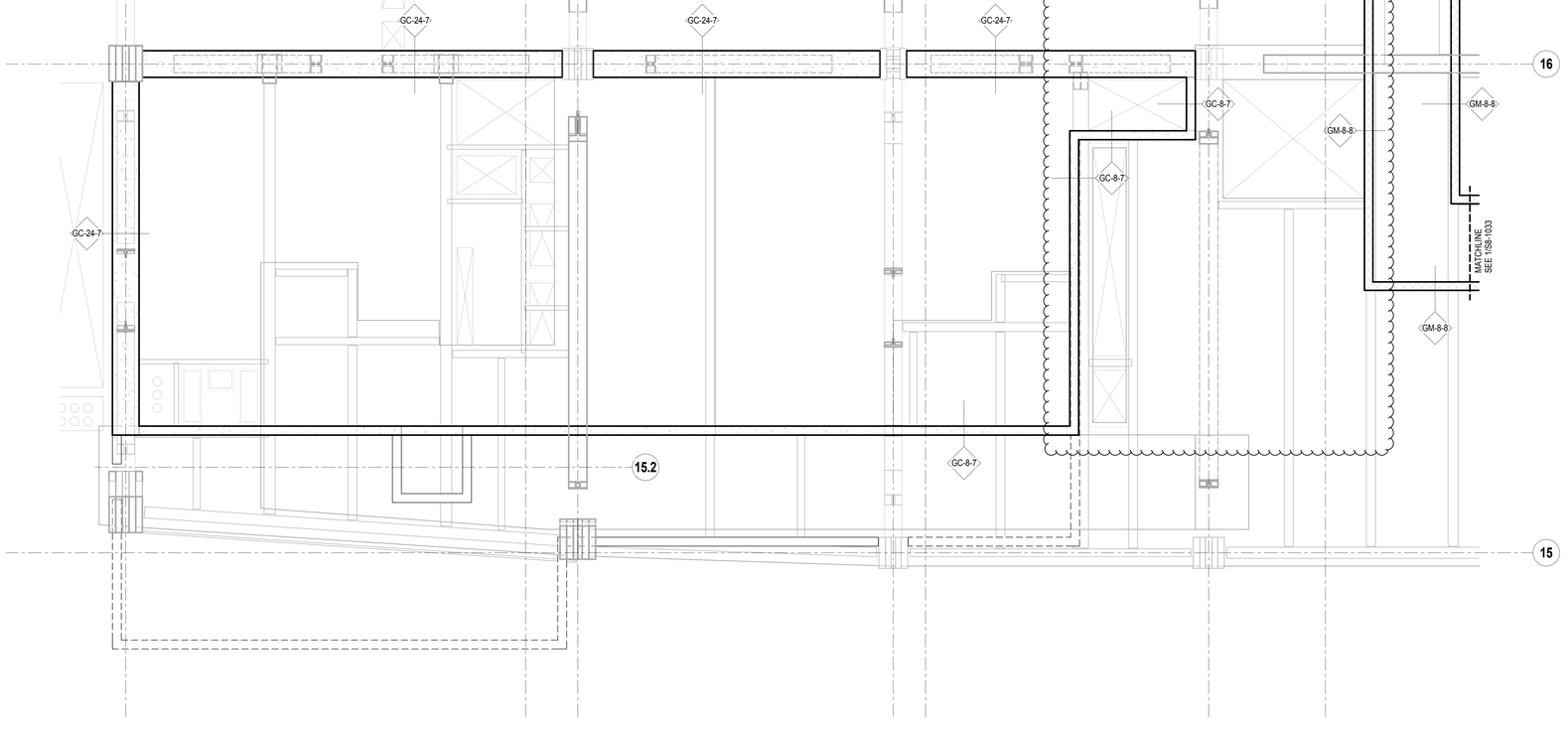

2 PART PLAN - STAIR A AND STAIR B - LEVEL 09

1/4" = 1'-0"

SHEET NOTES:

1. S8 SERIES DRAWINGS IDENTIFY SPECIAL WALLS.
2. SEE ARCHITECTURAL DRAWINGS FOR ALL WALL LOCATIONS AND FINISHES. SPECIAL WALLS SHOWN HERE MAY NOT REFLECT THE FULL WALL THICKNESS OR MAKE-UP AND ARE INTENDED TO CONVEY THE STRUCTURAL PROPERTIES ONLY. WALL PENETRATIONS FOR DOORWAYS / MEP SERVICES ARE NOT SHOWN ON THE S8-SERIES DRAWINGS.
3. SEE S1 SERIES DRAWINGS FOR FLOOR FRAMING. FRAMING SHOWN IN GREY ON S8 SERIES DRAWINGS IS INCLUDED FOR REFERENCE ONLY.
4. SEE S4 SERIES DRAWINGS FOR TYPICAL MASONRY NON-BEARING WALL DETAILS.
5. SEE S4 SERIES DRAWINGS FOR TYPICAL COMPOSITE DECK DETAILS NOT SHOWN OR INDICATED ON THE S8 SERIES DRAWINGS.
6. TYPICAL DETAILS ARE PROVIDED FOR SPECIAL WALL OPENINGS. ALL OPENINGS THAT DO NOT FALL WITHIN PARAMETERS OF THE TYPICAL DETAILS MUST BE APPROVED BY THE STRUCTURAL ENGINEER.
7. CORNERS AND INTERSECTIONS OF SPECIAL CONCRETE WALLS SHALL HAVE A BOND BREAK UON. SEE DETAIL 8/S8-2002 FOR TYPICAL BOND BREAK DETAILS.
8. CONCRETE STRENGTH OF SPECIAL WALLS SHALL MEET THE FOLLOWING 28-DAY COMPRESSIVE STRENGTHS (f'c) UON:
   - CONCRETE WALLS 5,000 PSI
   - STEEL PLATE WALLS 5,000 PSI
9. STEEL AND CONNECTION MATERIALS FOR SPECIAL WALLS SHALL CONFORM TO THE MINIMUM REQUIREMENTS AS INDICATED IN THE STRUCTURAL GENERAL NOTES EXCEPT AS FOLLOWS:
   - ANGLES: ASTM A572, MINIMUM YIELD STRENGTH 50 KSI
   - STEEL WALL PLATES: ASTM A572, MINIMUM YIELD STRENGTH 50 KSI
   - COLD-FORMED STUDS: MINIMUM YIELD STRENGTH 50 KSI
10. THE FOLLOWING NOMENCLATURE AND TABLES ARE USED TO IDENTIFY THE STRUCTURAL MAKE-UP OF THE SPECIAL WALLS:

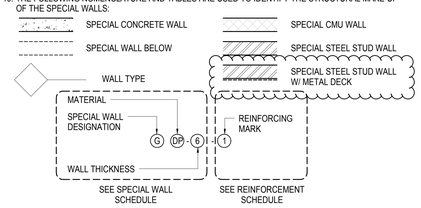

11. SEE S8-2001 AND S8-2002 FOR TYPICAL CONNECTION DETAILS FOR SPECIAL CONCRETE WALLS.
12. SEE S8-2003 FOR TYPICAL CONNECTION DETAILS FOR SPECIAL MASONRY WALLS.
13. SEE S8-2005 FOR TYPICAL CONNECTION DETAILS FOR STEEL SANDWICH PLATE WALLS.
14. SEE S8-2006 FOR TYPICAL CONNECTION DETAILS FOR SPECIAL COLD FORMED STEEL STUD WALLS.

SPECIAL WALL SCHEDULE

WALL ID	WALL THICKNESS (IN)	WALL MATERIAL	COMMENTS
GC-24	24	CONCRETE	
GC-20	20	CONCRETE	
GC-16	16	CONCRETE	
GC-12	12	CONCRETE	
GC-8	8	CONCRETE	
GC-7.5	7 1/2	CONCRETE	
GM-8	8	CMU	16" BLOCK LENGTH, TYP 18" BLOCK LENGTH, ALT.
GSP-8.5	8 1/2	STEEL SANDWICH PLATE	8" CONC CORE W/ (1) 1/2" THICK STL PLATE
GDP-8.75	8 3/4	STEEL SANDWICH PLATE	7" CONC CORE BETWEEN (2) 7/8" THICK STL PLATES
GDP-6	6	STEEL SANDWICH PLATE	5" CONC CORE BETWEEN (2) 1/2" THICK STL PLATES
GD-16	16	COLD-FORMED STEEL STUD W/ 1 1/2" 20 GA METAL DECK	1600S300-97 STUDS @ 12" O.C. UON
GS-6	6	COLD-FORMED STEEL STUD W/ GWB	600S250-97 STUDS @ 16" O.C. UON

REINFORCEMENT SCHEDULE

MARK	VERT BARS		HORIZ BARS*	
	BAR SIZE	BAR SPACING (IN)	BAR SIZE	BAR SPACING (IN)
1	6	12	6	12
2	6	8	6	12
3	6	6	6	12
4	6	4	6	12
5	5	24	5	24
6	5	16	5	16
7	5	12	5	12
8	5	8	5	12
9	5	6	5	12
10	5	4	5	12

* HORIZONTAL BAR CALL OUTS ARE SPECIFICALLY FOR SPECIAL CONCRETE WALLS. SPECIAL MASONRY WALLS TO HAVE STANDARD LADDER MESH JOINT REINFORCEMENT EVERY OTHER COURSE.

Damian Titus
Buildings
APPROVED
Under Directive 2 of 1975
AMENDED APPLICATION
Date: 05/01/2017
NYC Development Hub

0 4' 8' 16'

N

HUDSON YARDS - RETAIL PODIUM AND TOWER A

500 WEST 33RD STREET
New York, NY

Client
Related Companies
60 Columbus Circle
New York, NY 10023
TEL: 212.801.1000 FAX: 212.801.1048

Oxford Properties Group
320 Park Avenue, 17th Floor
New York, NY 10022
TEL: 212.986.7514 FAX: 212.986.7510

Architect
Kohn Pedersen Fox Associates
11 West 42nd Street
New York, New York 10036
TEL: 212.977.6500 FAX: 212.956.2526

Structural Engineer
Thornton Tomasetti, Inc.
51 Madison Avenue
New York, New York 10010
TEL: 917.661.7800 FAX: 718.661.7801

Mechanical, Electrical, Plumbing, Fire Protection
Jaros Baum & Bolles Consulting Engineers
80 Pine Street
New York, NY 10013
TEL: 212.530.9300 FAX: 212.269.5894

Retail Interior Design & Planning
Elkus-Manfredi
300 A Street
Boston, MA 02210
TEL: 617.426.1300

No.	Description	Date
2	D.O.B. AMENDMENT #2	10/15/2016
1	D.O.B. BUILDING PERMIT FILING	12/10/2014

Key Plan

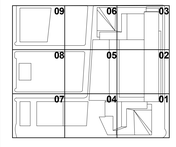

Issue Date: 12/10/2014
Project No. N11328.00
Drawn By: Author
Sheet Number

HYE -TA -S8-1003

Drawing Title

STAIR A / STAIR B PART PLANS

Drawing Number
S8-1003
A-Scan Drawing Number
S-953.01

© 2013 KOHN PEDERSEN FOX ASSOCIATES PC. All rights reserved.

S8-1003
10/19/2016 10:44:15 AM STAIR A / STAIR B PART PLANS
P:\NY\Projects\N11328.00\Drawings\Structural\Record Issued\2016-10-19 - D.O.B. Amendment No.2\Revit - Rev. Removed\HYTA_S8-series.rvt

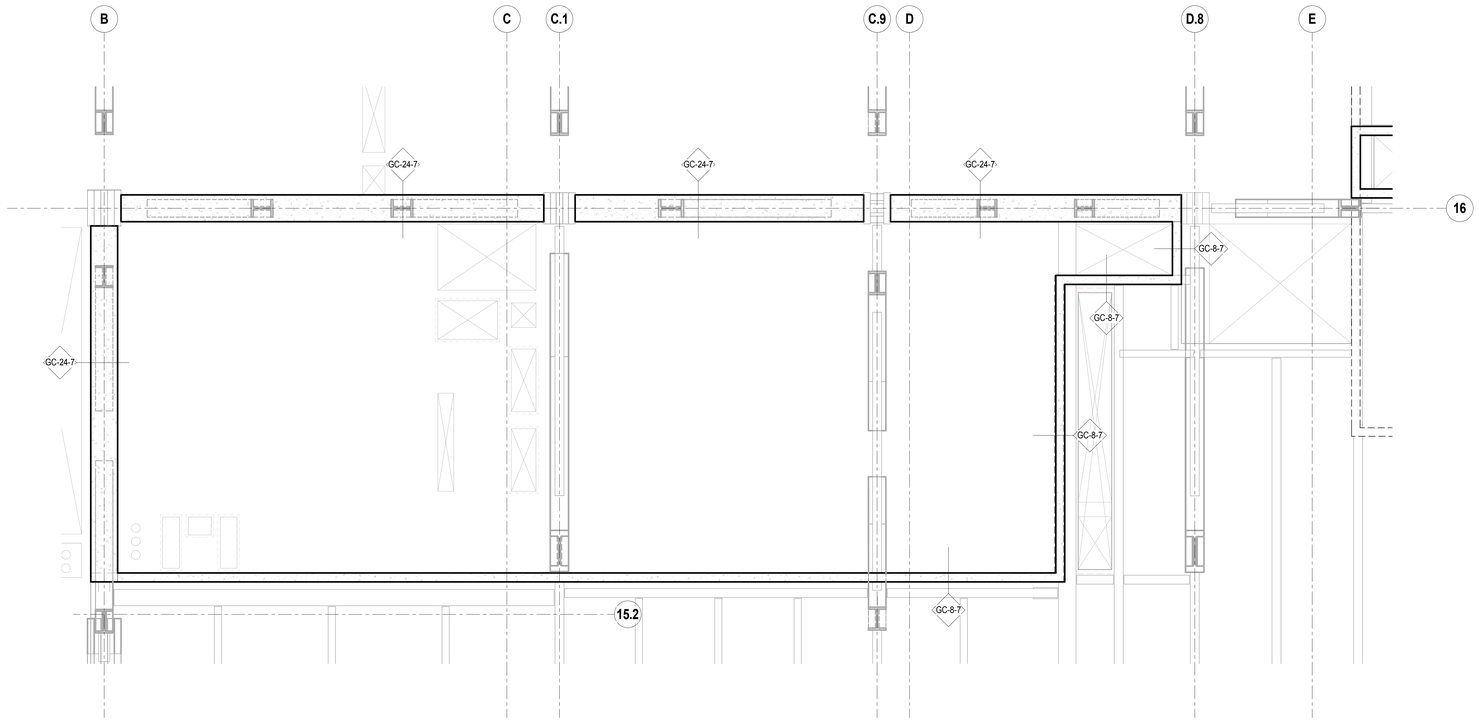

1 PART PLAN - STAIR A AND STAIR B - LEVEL 9U
1/4" = 1'-0"

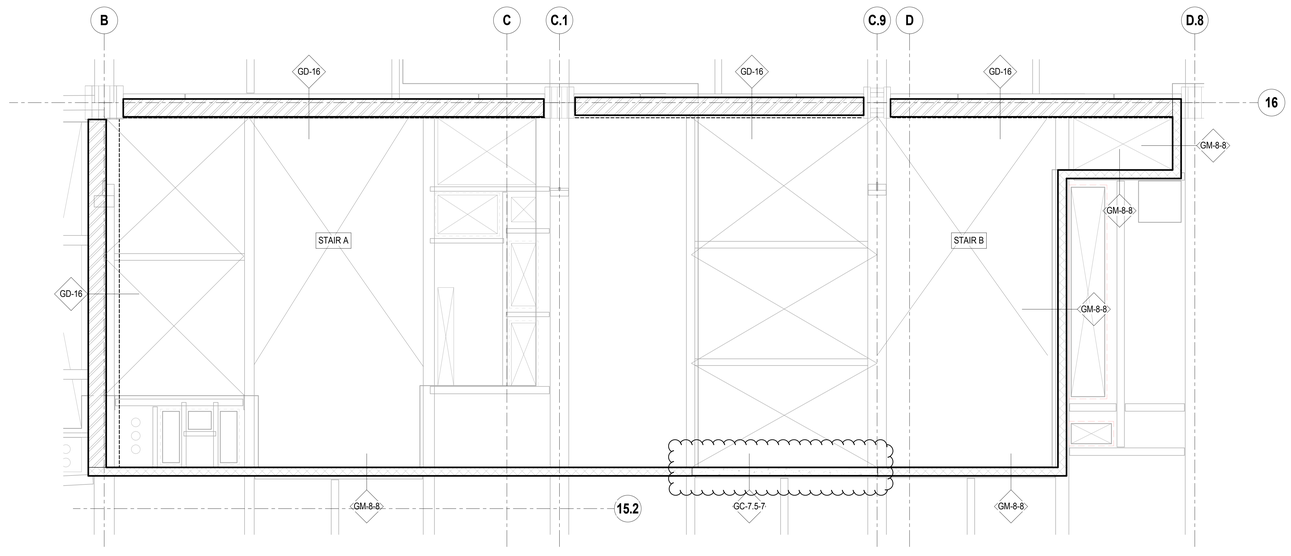

2 PART PLAN - STAIR A AND STAIR B - TYPICAL LEVELS 10 - 20
1/4" = 1'-0"

SHEET NOTES:

1. S8 SERIES DRAWINGS IDENTIFY SPECIAL WALLS.
2. SEE ARCHITECTURAL DRAWINGS FOR ALL WALL LOCATIONS AND FINISHES. SPECIAL WALLS SHOWN HERE MAY NOT REFLECT THE FULL WALL THICKNESS OR MAKE-UP AND ARE INTENDED TO CONVEY THE STRUCTURAL PROPERTIES ONLY. WALL PENETRATIONS FOR DOORWAYS / MEP SERVICES ARE NOT SHOWN ON THE S8-SERIES DRAWINGS.
3. SEE S1 SERIES DRAWINGS FOR FLOOR FRAMING. FRAMING SHOWN IN GREY ON S8 SERIES DRAWINGS IS INCLUDED FOR REFERENCE ONLY.
4. SEE S4 SERIES DRAWINGS FOR TYPICAL MASONRY NON-BEARING WALL DETAILS.
5. SEE S4 SERIES DRAWINGS FOR TYPICAL COMPOSITE DECK DETAILS NOT SHOWN OR INDICATED ON THE S8 SERIES DRAWINGS.
6. TYPICAL DETAILS ARE PROVIDED FOR SPECIAL WALL OPENINGS. ALL OPENINGS THAT DO NOT FALL WITHIN PARAMETERS OF THE TYPICAL DETAILS MUST BE APPROVED BY THE STRUCTURAL ENGINEER.
7. CORNERS AND INTERSECTIONS OF SPECIAL CONCRETE WALLS SHALL HAVE A BOND BREAK UON. SEE DETAIL 8/S8-2002 FOR TYPICAL BOND BREAK DETAILS.
8. CONCRETE STRENGTH OF SPECIAL WALLS SHALL MEET THE FOLLOWING 28-DAY COMPRESSIVE STRENGTHS (f'c), UON:
   - CONCRETE WALLS 5,000 PSI
   - STEEL PLATE WALLS 5,000 PSI
9. STEEL AND CONNECTION MATERIALS FOR SPECIAL WALLS SHALL CONFORM TO THE MINIMUM REQUIREMENTS AS INDICATED IN THE STRUCTURAL GENERAL NOTES EXCEPT AS FOLLOWS:
   - ANGLES: ASTM A572, MINIMUM YIELD STRENGTH 50 KSI
   - STEEL WALL PLATES: ASTM A572, MINIMUM YIELD STRENGTH 50 KSI
   - COLD-FORMED STUDS: MINIMUM YIELD STRENGTH 50 KSI
10. THE FOLLOWING NOMENCLATURE AND TABLES ARE USED TO IDENTIFY THE STRUCTURAL MAKE-UP OF THE SPECIAL WALLS:

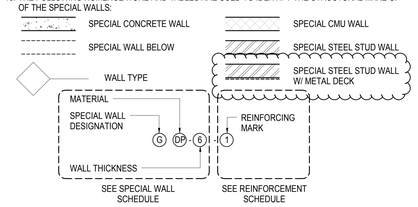

11. SEE S8-2001 AND S8-2002 FOR TYPICAL CONNECTION DETAILS FOR SPECIAL CONCRETE WALLS.
12. SEE S8-2003 FOR TYPICAL CONNECTION DETAILS FOR SPECIAL MASONRY WALLS.
13. SEE S8-2005 FOR TYPICAL CONNECTION DETAILS FOR STEEL SANDWICH PLATE WALLS.
14. SEE S8-2006 FOR TYPICAL CONNECTION DETAILS FOR SPECIAL COLD FORMED STEEL STUD WALLS.

SPECIAL WALL SCHEDULE

WALL ID	WALL THICKNESS (IN)	WALL MATERIAL	COMMENTS
GC-24	24	CONCRETE	
GC-20	20	CONCRETE	
GC-16	16	CONCRETE	
GC-12	12	CONCRETE	
GC-8	8	CONCRETE	
GC-7.5	7 1/2	CONCRETE	
GM-8	8	CMU	16" BLOCK LENGTH, TYP 18" BLOCK LENGTH, ALT.
GSP-8.5	8 1/2	STEEL SANDWICH PLATE	8" CONC CORE W/ (1) 1/2" THICK STL PLATE
GDP-8.75	8 3/4	STEEL SANDWICH PLATE	7" CONC CORE BETWEEN (2) 7/8" THICK STL PLATES
GDP-6	6	STEEL SANDWICH PLATE	5" CONC CORE BETWEEN (2) 1/2" THICK STL PLATES
GD-16	16	COLD-FORMED STEEL STUD W/ 1 1/2" 20 GA METAL DECK	1600S300-97 STUDS @ 12" O.C. UON
GS-6	6	COLD-FORMED STEEL STUD W/ GWB	600S250-97 STUDS @ 16" O.C. UON

REINFORCEMENT SCHEDULE

MARK	VERT BARS BAR SIZE	VERT BARS BAR SPACING (IN)	HORIZ BARS* BAR SIZE	HORIZ BARS* BAR SPACING (IN)
1	6	12	6	12
2	6	8	6	12
3	6	6	6	12
4	6	4	6	12
5	5	24	5	24
6	5	16	5	16
7	5	12	5	12
8	5	8	5	12
9	5	6	5	12
10	5	4	5	12

* HORIZONTAL BAR CALL OUTS ARE SPECIFICALLY FOR SPECIAL CONCRETE WALLS. SPECIAL MASONRY WALLS TO HAVE STANDARD LADDER MESH JOINT REINFORCEMENT EVERY OTHER COURSE.

Damian Titus
APPROVED
Under Directive 2 of 1975
AMENDED APPLICATION
Date: 05/03/2017
NYC Development Hub

0 4' 8' 16'

N

HUDSON YARDS - RETAIL PODIUM AND TOWER A
500 WEST 33RD STREET
New York, NY

Client
Related Companies
60 Columbus Circle
New York, NY 10023
TEL: 212.801.1000 FAX: 212.801.1048

Oxford Properties Group
320 Park Avenue, 17th Floor
New York, NY 10022
TEL: 212.986.7514 FAX: 212.986.7510

Architect
Kohn Pedersen Fox Associates
11 West 42nd Street
New York, New York 10036
TEL: 212.977.6500 FAX: 212.956.2526

Structural Engineer
Thornton Tomasetti, Inc.
51 Madison Avenue
New York, New York 10010
TEL: 917.661.7800 FAX: 718.661.7801

Mechanical, Electrical, Plumbing, Fire Protection
Jaros Baum & Bolles Consulting Engineers
80 Pine Street
New York, NY 10013
TEL: 212.530.9300 FAX: 212.269.5894

Retail Interior Design & Planning
Elkus-Manfredi
300 A Street
Boston, MA 02210
TEL: 617.426.1300

No.	Description	Date
2	D.O.B. AMENDMENT #2	10/15/2016
1	D.O.B. BUILDING PERMIT FILING	12/10/2014

Key Plan

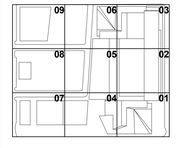

Issue Date: 12/10/2014
Project No. N11328.00
Drawn By: Author
Sheet Number

HYE -TA -S8-1004

Drawing Title

STAIR A / STAIR B PART PLANS

Drawing Number
S8-1004
B-Scan Drawing Number
S-954.01

© 2013 KOHN PEDERSEN FOX ASSOCIATES PC. All rights reserved.

S8-1004
10/19/2016 10:44:24 AM P:\NY\Projects\N11328.00\Drawings\Structural\Record\Issued\2016-10-18 - D.O.B. Amendment No.2\Revit - Rev- Removed\HYTA_S8-series.rvt
STAIR A \ STAIR B PART PLANS

DEPT OF BLDGS 421490025 Job Number
ES0001329M1 Scan Code

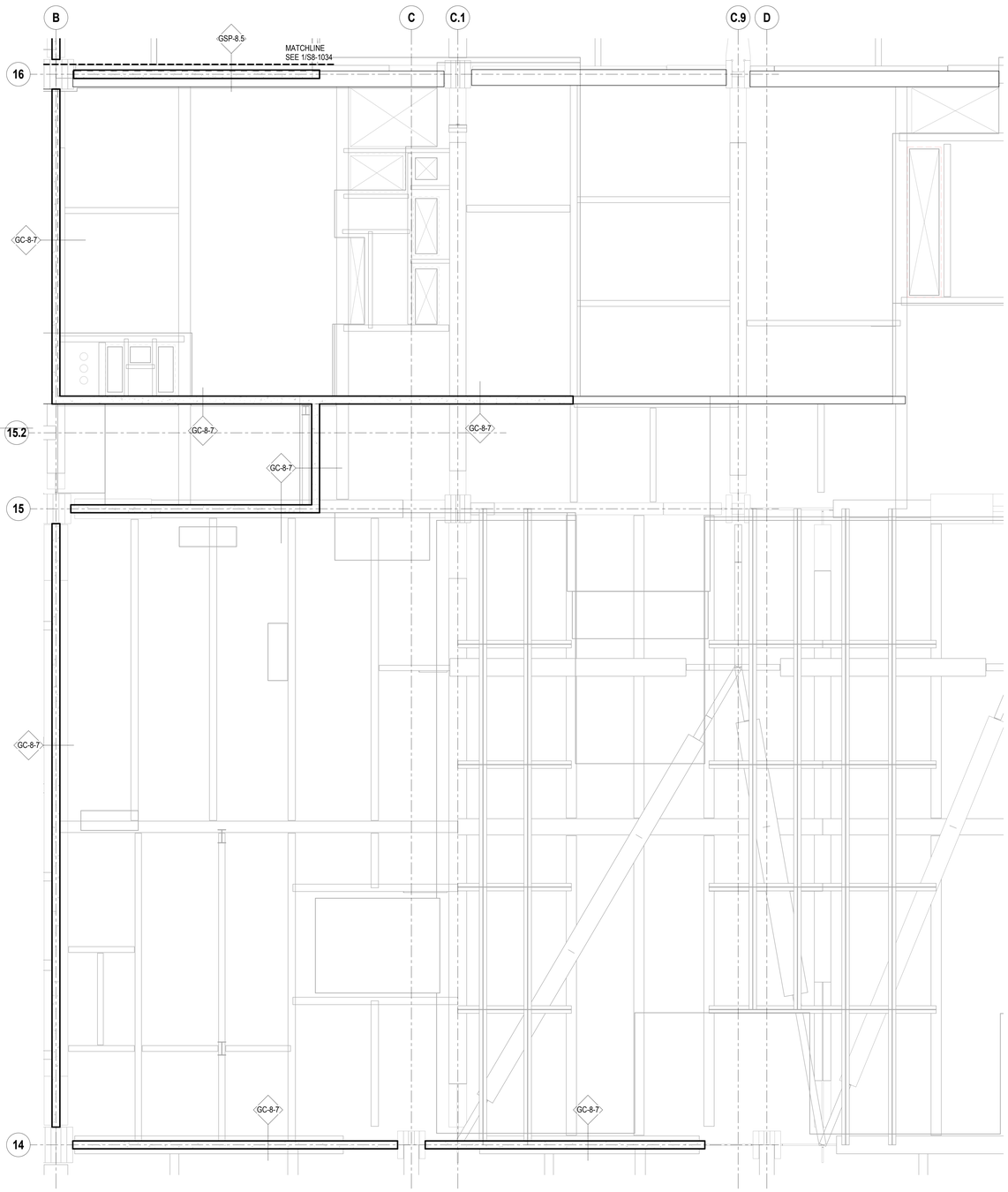

1 PART PLAN - STAIR A / STAIR B / STAIR D - LEVEL 21
1/4" = 1'-0"

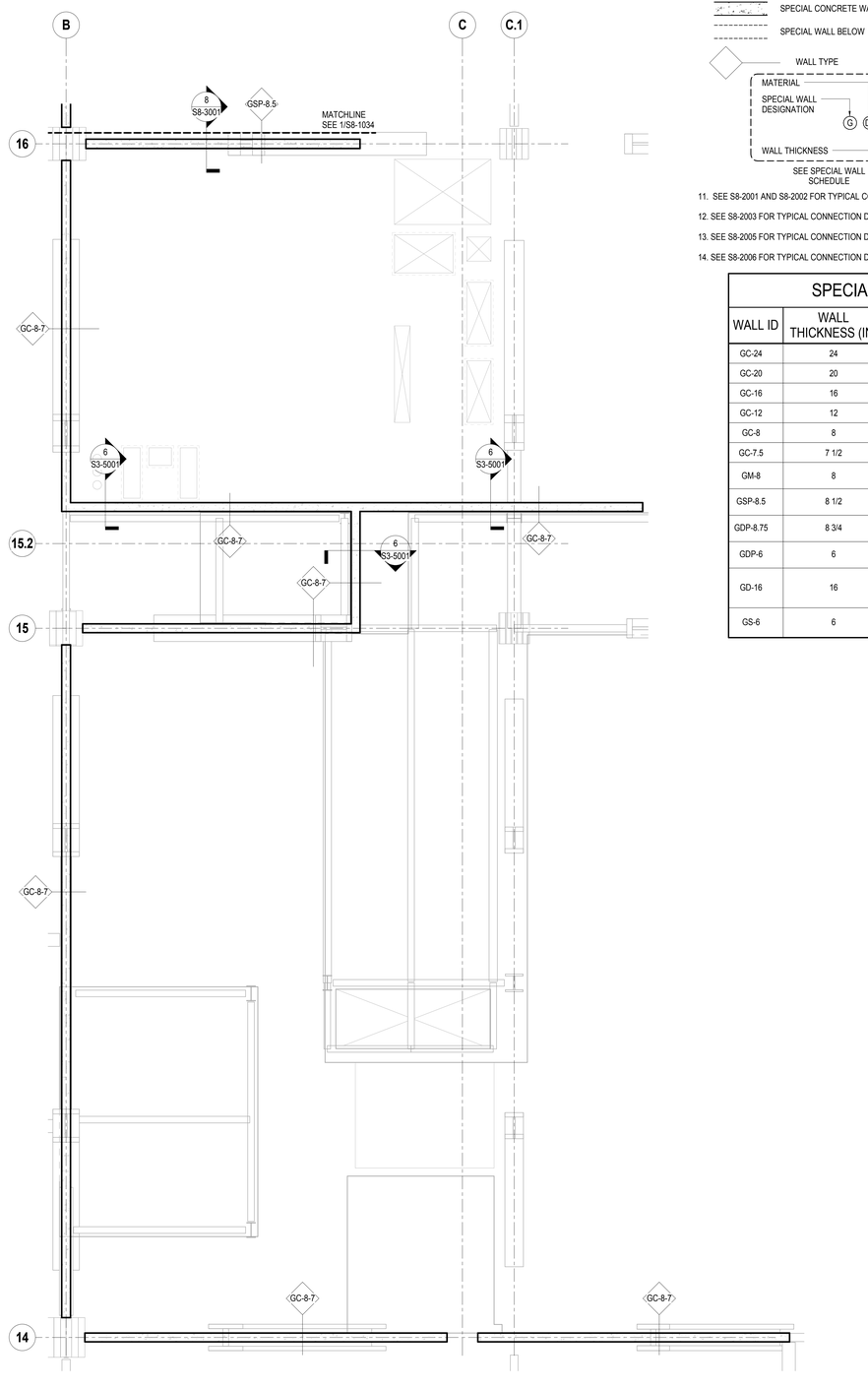

2 PART PLAN - STAIR A / STAIR B / STAIR D - LEVEL 21U
1/4" = 1'-0"

SHEET NOTES:

1. S8 SERIES DRAWINGS IDENTIFY SPECIAL WALLS.
2. SEE ARCHITECTURAL DRAWINGS FOR ALL WALL LOCATIONS AND FINISHES. SPECIAL WALLS SHOWN HERE MAY NOT REFLECT THE FULL WALL THICKNESS OR MAKE-UP AND ARE INTENDED TO CONVEY THE STRUCTURAL PROPERTIES ONLY. WALL PENETRATIONS FOR DOORWAYS / MEP SERVICES ARE NOT SHOWN ON THE S8-SERIES DRAWINGS.
3. SEE S1 SERIES DRAWINGS FOR FLOOR FRAMING. FRAMING SHOWN IN GREY ON S8 SERIES DRAWINGS IS INCLUDED FOR REFERENCE ONLY.
4. SEE S4 SERIES DRAWINGS FOR TYPICAL MASONRY NON-BEARING WALL DETAILS.
5. SEE S4 SERIES DRAWINGS FOR TYPICAL COMPOSITE DECK DETAILS NOT SHOWN OR INDICATED ON THE S8 SERIES DRAWINGS.
6. TYPICAL DETAILS ARE PROVIDED FOR SPECIAL WALL OPENINGS. ALL OPENINGS THAT DO NOT FALL WITHIN PARAMETERS OF THE TYPICAL DETAILS MUST BE APPROVED BY THE STRUCTURAL ENGINEER.
7. CORNERS AND INTERSECTIONS OF SPECIAL CONCRETE WALLS SHALL HAVE A BOND BREAK UON. SEE DETAIL 8/S8-2002 FOR TYPICAL BOND BREAK DETAILS.
8. CONCRETE STRENGTH OF SPECIAL WALLS SHALL MEET THE FOLLOWING 28-DAY COMPRESSIVE STRENGTHS (f'c), UON:
   CONCRETE WALLS 5,000 PSI
   STEEL PLATE WALLS 5,000 PSI
9. STEEL AND CONNECTION MATERIALS FOR SPECIAL WALLS SHALL CONFORM TO THE MINIMUM REQUIREMENTS AS INDICATED IN THE STRUCTURAL GENERAL NOTES EXCEPT AS FOLLOWS:
   ANGLES: ASTM A572, MINIMUM YIELD STRENGTH 50 KSI
   STEEL WALL PLATES: ASTM A572, MINIMUM YIELD STRENGTH 50 KSI
   COLD-FORMED STUDS: MINIMUM YIELD STRENGTH 50 KSI
10. THE FOLLOWING NOMENCLATURE AND TABLES ARE USED TO IDENTIFY THE STRUCTURAL MAKE-UP OF THE SPECIAL WALLS:

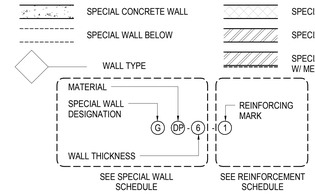

11. SEE S8-2001 AND S8-2002 FOR TYPICAL CONNECTION DETAILS FOR SPECIAL CONCRETE WALLS.
12. SEE S8-2003 FOR TYPICAL CONNECTION DETAILS FOR SPECIAL MASONRY WALLS.
13. SEE S8-2005 FOR TYPICAL CONNECTION DETAILS FOR STEEL SANDWICH PLATE WALLS.
14. SEE S8-2006 FOR TYPICAL CONNECTION DETAILS FOR SPECIAL COLD FORMED STEEL STUD WALLS.

SPECIAL WALL SCHEDULE

WALL ID	WALL THICKNESS (IN)	WALL MATERIAL	COMMENTS
GC-24	24	CONCRETE	
GC-20	20	CONCRETE	
GC-16	16	CONCRETE	
GC-12	12	CONCRETE	
GC-8	8	CONCRETE	
GC-7.5	7 1/2	CONCRETE	
GM-8	8	CMU	16" BLOCK LENGTH, TYP 18" BLOCK LENGTH, ALT.
GSP-8.5	8 1/2	STEEL SANDWICH PLATE	8" CONC CORE W/ (1) 1/2" THICK STL PLATE
GDP-8.75	8 3/4	STEEL SANDWICH PLATE	7" CONC CORE BETWEEN (2) 7/8" THICK STL PLATES
GDP-6	6	STEEL SANDWICH PLATE	5" CONC CORE BETWEEN (2) 1/2" THICK STL PLATES
GD-16	16	COLD-FORMED STEEL STUD W/ 1 1/2" 20 GA METAL DECK	1600S300-97 STUDS @ 12" O.C. UON
GS-6	6	COLD-FORMED STEEL STUD W/ GWB	600S250-97 STUDS @ 16" O.C. UON

REINFORCEMENT SCHEDULE

MARK	VERT BARS		HORIZ BARS*	
	BAR SIZE	BAR SPACING (IN)	BAR SIZE	BAR SPACING (IN)
1	6	12	6	12
2	6	8	6	12
3	6	6	6	12
4	6	4	6	12
5	5	24	5	24
6	5	16	5	16
7	5	12	5	12
8	5	8	5	12
9	5	6	5	12
10	5	4	5	12

* HORIZONTAL BAR CALL OUTS ARE SPECIFICALLY FOR SPECIAL CONCRETE WALLS. SPECIAL MASONRY WALLS TO HAVE STANDARD LADDER MESH JOINT REINFORCEMENT EVERY OTHER COURSE.

HUDSON YARDS - RETAIL PODIUM AND TOWER A

500 WEST 33RD STREET
New York, NY

Client
Related Companies
60 Columbus Circle
New York, NY 10023
TEL: 212.801.1000 FAX: 212.801.1048

Oxford Properties Group
320 Park Avenue, 17th Floor
New York, NY 10022
TEL: 212.986.7514 FAX: 212.986.7510

Architect
Kohn Pedersen Fox Associates
11 West 42nd Street
New York, New York 10036
TEL: 212.977.6500 FAX: 212.956.2526

Structural Engineer
Thornton Tomasetti, Inc.
51 Madison Avenue
New York, New York 10010
TEL: 917.661.7800 FAX: 718.661.7801

Mechanical, Electrical, Plumbing, Fire Protection
Jaros Baum & Bolles Consulting Engineers
80 Pine Street
New York, NY 10013
TEL: 212.530.9300 FAX: 212.269.5894

Retail Interior Design & Planning
Elkus-Manfredi
300 A Street
Boston, MA 02210
TEL: 617.426.1300

No.	Description	Date
1	D.O.B. AMENDMENT #2	10/15/2016

Key Plan

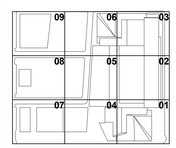

Issue Date: 10/15/2016
Project No. N11328.00
Drawn By: Author
Sheet Number

HYE -TA -S8-1005
Drawing Title

STAIR A / STAIR B PART PLANS

Drawing Number
S8-1005
A-Issue Drawing Number
S-955.00

Damian Titus
Buildings
APPROVED
Under Directive 2 of 1975
AMENDED APPLICATION
Date: 05/01/2017
NYC Development Hub

0 4' 8' 16'

N

SHEET 402 OF 443

© 2013 KOHN PEDERSEN FOX ASSOCIATES PC. All rights reserved.

S8-1005
10/19/2016 10:44:32 AM
STAIR A / STAIR B PART PLANS
P:\NY\Projects\N11328.00\Drawings\Structural\Record\Issued\2016-10-15 - D.O.B. Amendment No.2\Revit - Rev. Removed\HYTA_S8-series.rvt

DEPT OF BLDGS STR149055 Job Number
ES#11650800 Scan Code

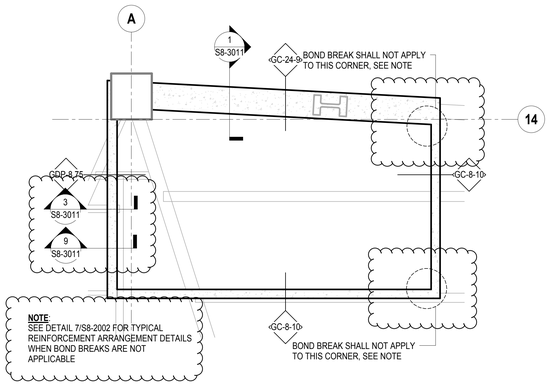

1 PART PLAN - STAIR B - UPPER PLATFORM LEVEL
1/4" = 1'-0"

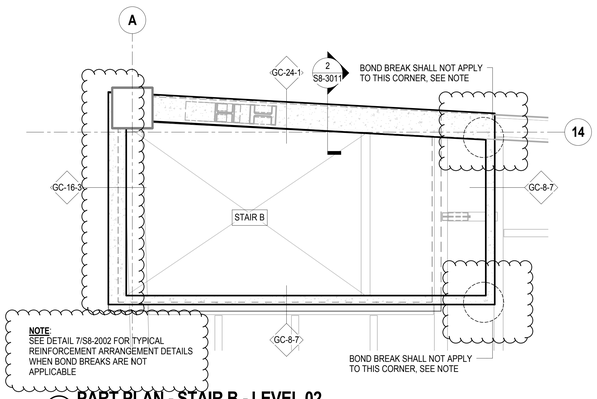

2 PART PLAN - STAIR B - LEVEL 02
1/4" = 1'-0"

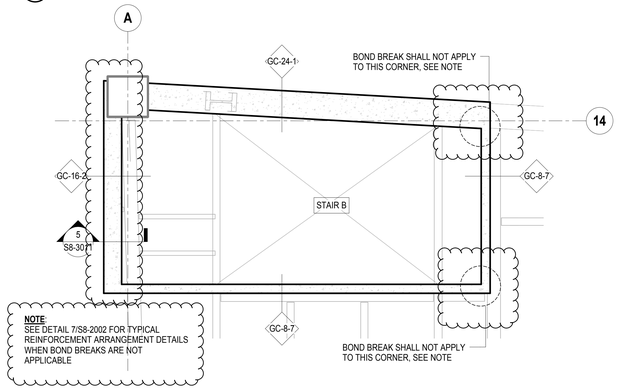

3 PART PLAN - STAIR B - LEVEL 03
1/4" = 1'-0"

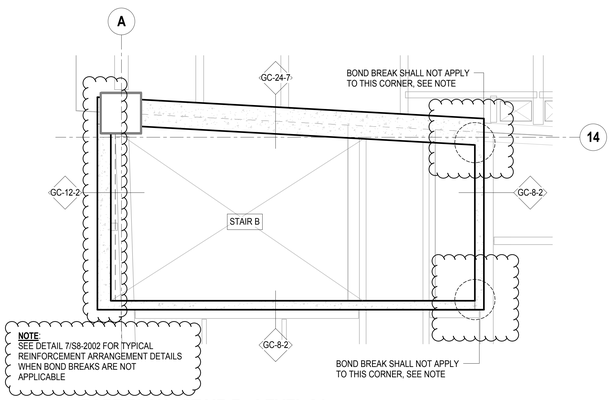

4 PART PLAN - STAIR B - LEVEL 04
1/4" = 1'-0"

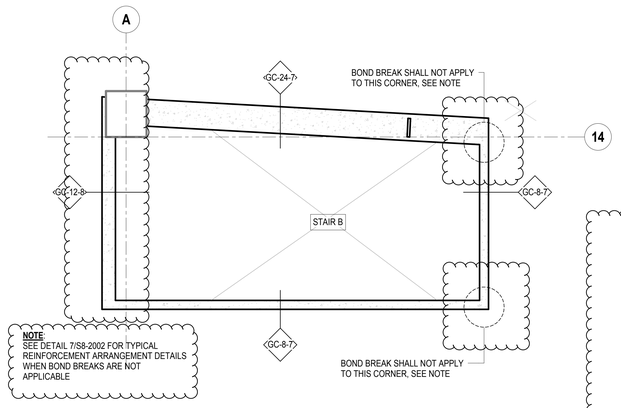

5 PART PLAN - STAIR B - LEVEL 05
1/4" = 1'-0"

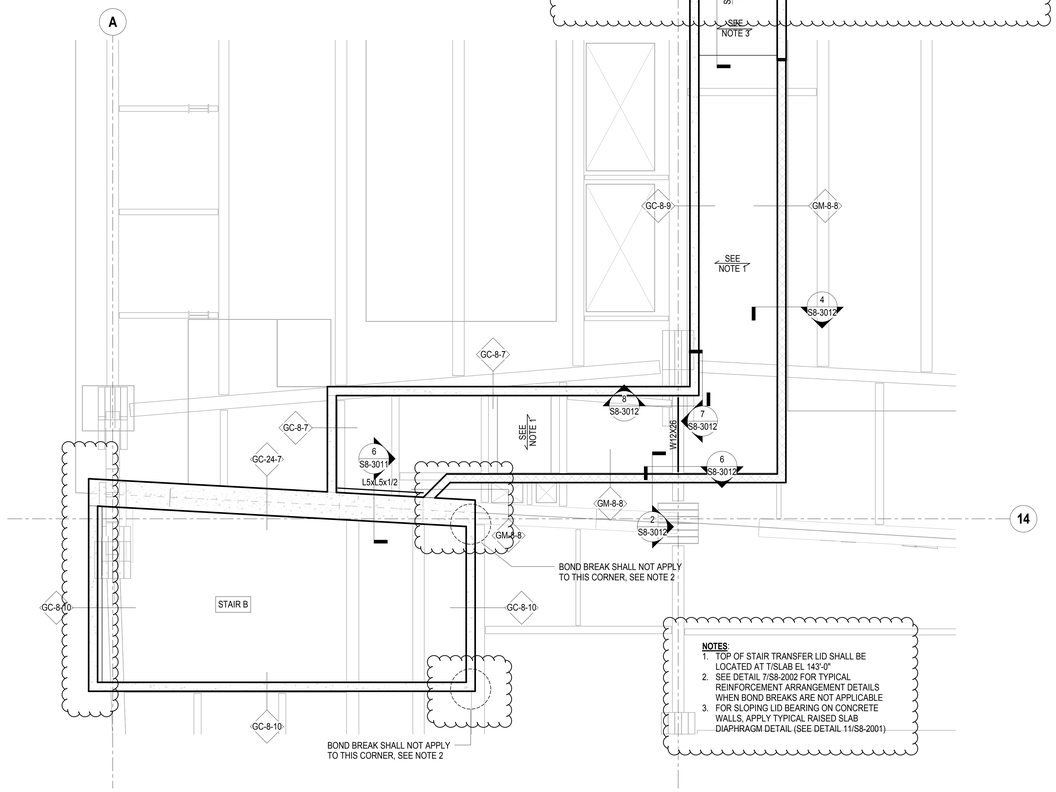

6 PART PLAN - STAIR B - LEVEL 06
1/4" = 1'-0"

SHEET NOTES:

1. S8 SERIES DRAWINGS IDENTIFY SPECIAL WALLS.
2. SEE ARCHITECTURAL DRAWINGS FOR ALL WALL LOCATIONS AND FINISHES. SPECIAL WALLS SHOWN HERE MAY NOT REFLECT THE FULL WALL THICKNESS OR MAKE-UP AND ARE INTENDED TO CONVEY THE STRUCTURAL PROPERTIES ONLY. WALL PENETRATIONS FOR DOORWAYS / MEP SERVICES ARE NOT SHOWN ON THE S8-SERIES DRAWINGS.
3. SEE S1 SERIES DRAWINGS FOR FLOOR FRAMING. FRAMING SHOWN IN GREY ON S8 SERIES DRAWINGS IS INCLUDED FOR REFERENCE ONLY.
4. SEE S4 SERIES DRAWINGS FOR TYPICAL MASONRY NON-BEARING WALL DETAILS.
5. SEE S4 SERIES DRAWINGS FOR TYPICAL COMPOSITE DECK DETAILS NOT SHOWN OR INDICATED ON THE S8 SERIES DRAWINGS.
6. TYPICAL DETAILS ARE PROVIDED FOR SPECIAL WALL OPENINGS. ALL OPENINGS THAT DO NOT FALL WITHIN PARAMETERS OF THE TYPICAL DETAILS MUST BE APPROVED BY THE STRUCTURAL ENGINEER.
7. CORNERS AND INTERSECTIONS OF SPECIAL CONCRETE WALLS SHALL HAVE A BOND BREAK UON. SEE DETAIL 8/S8-2002 FOR TYPICAL BOND BREAK DETAILS.
8. CONCRETE STRENGTH OF SPECIAL WALLS SHALL MEET THE FOLLOWING 28-DAY COMPRESSIVE STRENGTHS (f'c), UON:
   CONCRETE WALLS 5,000 PSI
   STEEL PLATE WALLS 5,000 PSI
9. STEEL AND CONNECTION MATERIALS FOR SPECIAL WALLS SHALL CONFORM TO THE MINIMUM REQUIREMENTS AS INDICATED IN THE STRUCTURAL GENERAL NOTES EXCEPT AS FOLLOWS:
   ANGLES: ASTM A572, MINIMUM YIELD STRENGTH 50 KSI
   STEEL WALL PLATES: ASTM A572, MINIMUM YIELD STRENGTH 50 KSI
   COLD-FORMED STUDS: MINIMUM YIELD STRENGTH 50 KSI
10. THE FOLLOWING NOMENCLATURE AND TABLES ARE USED TO IDENTIFY THE STRUCTURAL MAKE-UP OF THE SPECIAL WALLS:

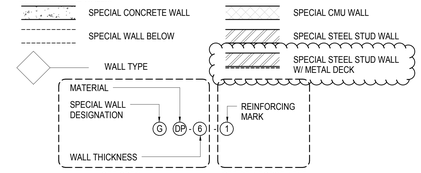

11. SEE S8-2001 AND S8-2002 FOR TYPICAL CONNECTION DETAILS FOR SPECIAL CONCRETE WALLS.
12. SEE S8-2003 FOR TYPICAL CONNECTION DETAILS FOR SPECIAL MASONRY WALLS.
13. SEE S8-2005 FOR TYPICAL CONNECTION DETAILS FOR STEEL SANDWICH PLATE WALLS.
14. SEE S8-2006 FOR TYPICAL CONNECTION DETAILS FOR SPECIAL COLD FORMED STEEL STUD WALLS.

SPECIAL WALL SCHEDULE

WALL ID	WALL THICKNESS (IN)	WALL MATERIAL	COMMENTS
GC-24	24	CONCRETE	
GC-20	20	CONCRETE	
GC-16	16	CONCRETE	
GC-12	12	CONCRETE	
GC-8	8	CONCRETE	
GC-7.5	7 1/2	CONCRETE	
GM-8	8	CMU	16" BLOCK LENGTH, TYP. 18" BLOCK LENGTH, ALT.
GSP-8.5	8 1/2	STEEL SANDWICH PLATE	8" CONC CORE W/ (1) 1/2" THICK STL PLATE
GDP-8.75	8 3/4	STEEL SANDWICH PLATE	7" CONC CORE BETWEEN (2) 7/8" THICK STL PLATES
GDP-6	6	STEEL SANDWICH PLATE	5" CONC CORE BETWEEN (2) 1/2" THICK STL PLATES
GD-16	16	COLD-FORMED STEEL STUD W/ 1 1/2" 20 GA METAL DECK	1600S300-97 STUDS @ 12" O.C. UON
GS-6	6	COLD-FORMED STEEL STUD W/ GWB	600S250-97 STUDS @ 16" O.C. UON

REINFORCEMENT SCHEDULE

MARK	VERT BARS BAR SIZE	VERT BARS BAR SPACING (IN)	HORIZ BARS* BAR SIZE	HORIZ BARS* BAR SPACING (IN)
1	6	12	6	12
2	6	8	6	12
3	6	6	6	12
4	6	4	6	12
5	5	24	5	24
6	5	16	5	16
7	5	12	5	12
8	5	8	5	12
9	5	6	5	12
10	5	4	5	12

* HORIZONTAL BAR CALL OUTS ARE SPECIFICALLY FOR SPECIAL CONCRETE WALLS. SPECIAL MASONRY WALLS TO HAVE STANDARD LADDER MESH JOINT REINFORCEMENT EVERY OTHER COURSE.

HUDSON YARDS - RETAIL PODIUM AND TOWER A

500 WEST 33RD STREET
New York, NY

Client
Related Companies
60 Columbus Circle
New York, NY 10023
TEL: 212.801.1000 FAX: 212.801.1048

Oxford Properties Group
320 Park Avenue, 17th Floor
New York, NY 10022
TEL: 212.986.7514 FAX: 212.986.7510

Architect
Kohn Pedersen Fox Associates
11 West 42nd Street
New York, New York 10036
TEL: 212.977.6500 FAX: 212.956.2526

Structural Engineer
Thornton Tomasetti, Inc.
51 Madison Avenue
New York, New York 10010
TEL: 917.661.7800 FAX: 718.661.7801

Mechanical, Electrical, Plumbing, Fire Protection
Jaros Baum & Bolles Consulting Engineers
80 Pine Street
New York, NY 10013
TEL: 212.530.9300 FAX: 212.269.5894

Retail Interior Design & Planning
Elkus-Manfredi
300 A Street
Boston, MA 02210
TEL: 617.426.1300

No.	Description	Date
2	D.O.B. AMENDMENT #2	10/15/2016
1	D.O.B. BUILDING PERMIT FILING	12/10/2014

Key Plan

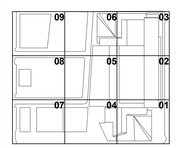

Issue Date: 12/10/2014
Project No. N11328.00
Drawn By: Author
Sheet Number

Damian Titus
Buildings
APPROVED
Under Directive 2 of 1975
AMENDED APPLICATION
Date: 05/01/2017
NYC Development Hub

HYE -TA -S8-1011

Drawing Title

STAIR B PART PLANS

Drawing Number
S8-1011
S-Scan Drawing Number
S-956.01

© 2013 KOHN PEDERSEN FOX ASSOCIATES PC. All rights reserved.

S8-1011
10/19/2016 10:45:29 AM
S8 STAIR B PART PLANS
P:\NY\Projects\N11328.00\Drawings\Structural\Record\Issued\2016-10-16 - D.O.B. Amendment No.2\Revit - Rev- Removed\HYTA_S8-series.rvt

DEPT OF BUILDINGS Job Number
ES1106220 Scan Code

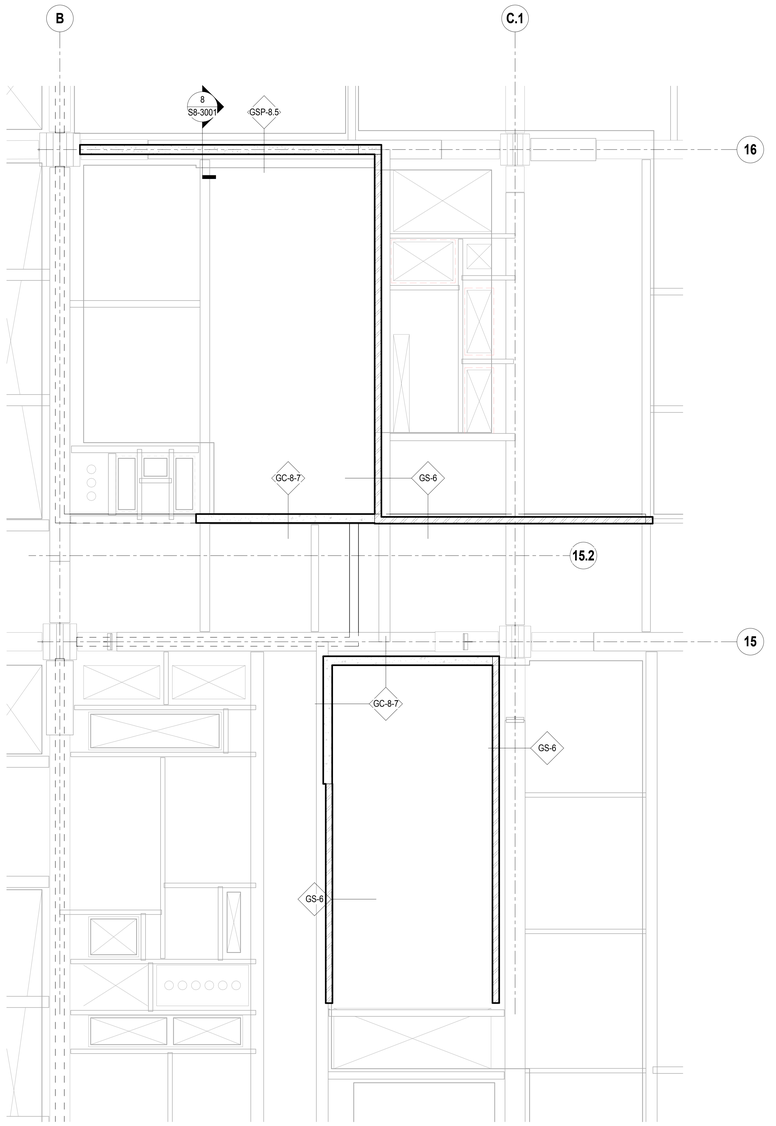

1 PART PLAN - STAIR A AND STAIR B - TYPICAL LEVELS 22 - 23
1/4" = 1'-0"

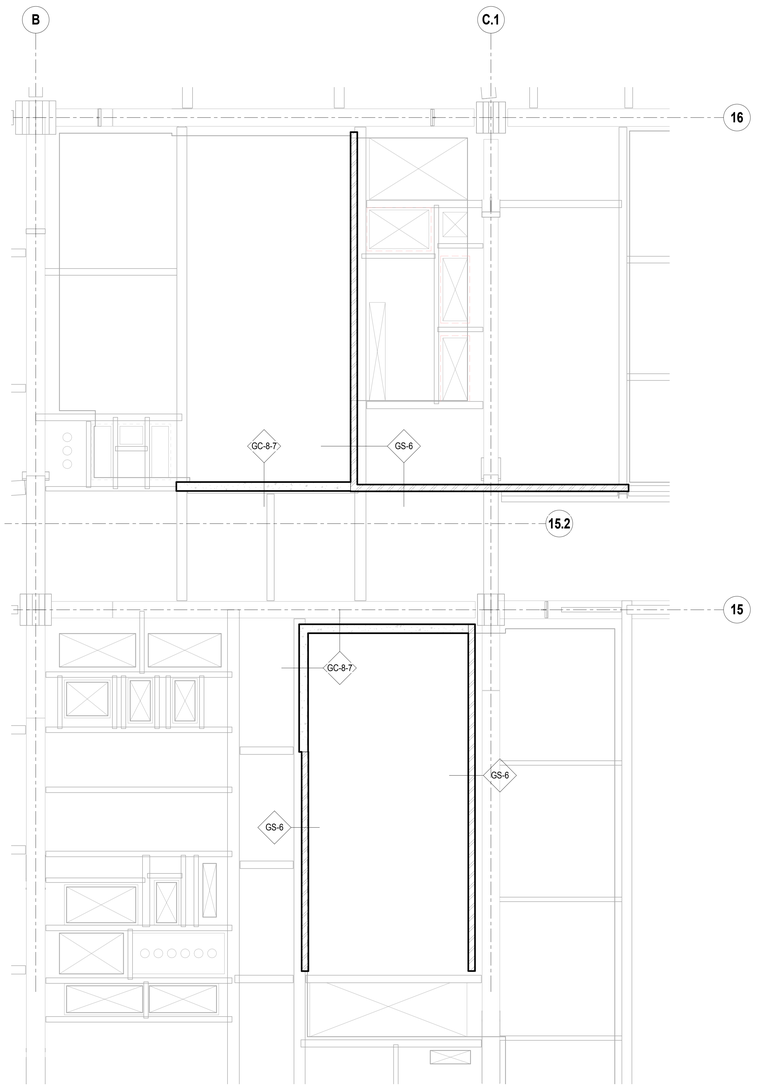

2 PART PLAN - STAIR A AND STAIR B - TYPICAL LEVELS 24 - 38
1/4" = 1'-0"

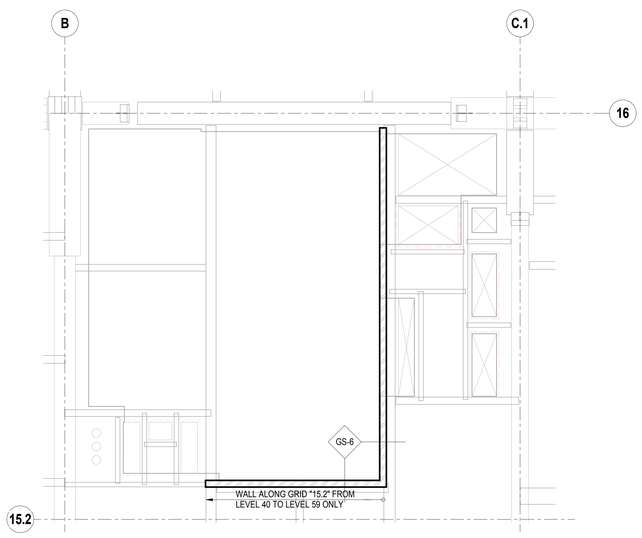

3 PART PLAN - STAIR A - TYPICAL LEVELS 39 - 59
1/4" = 1'-0"

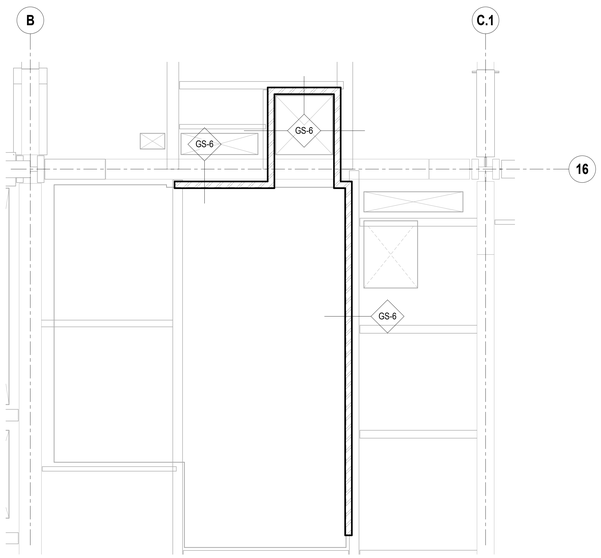

4 PART PLAN - STAIR A - TYPICAL LEVELS 61 AND 62 - 64
1/4" = 1'-0"

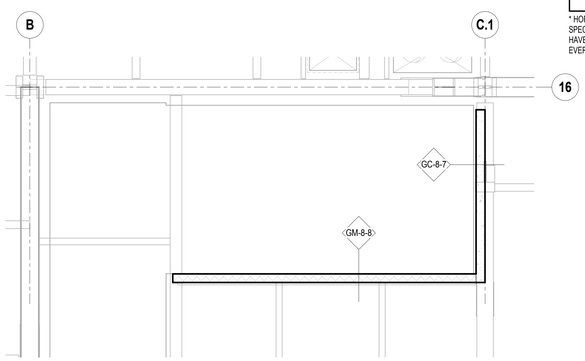

5 PART PLAN - STAIR A - TYPICAL LEVELS 66M - 68
1/4" = 1'-0"

SHEET NOTES:

1. S8 SERIES DRAWINGS IDENTIFY SPECIAL WALLS.
2. SEE ARCHITECTURAL DRAWINGS FOR ALL WALL LOCATIONS AND FINISHES. SPECIAL WALLS SHOWN HERE MAY NOT REFLECT THE FULL WALL THICKNESS OR MAKE-UP AND ARE INTENDED TO CONVEY THE STRUCTURAL PROPERTIES ONLY. WALL PENETRATIONS FOR DOORWAYS / MEP SERVICES ARE NOT SHOWN ON THE S8-SERIES DRAWINGS.
3. SEE S1 SERIES DRAWINGS FOR FLOOR FRAMING. FRAMING SHOWN IN GREY ON S8 SERIES DRAWINGS IS INCLUDED FOR REFERENCE ONLY.
4. SEE S4 SERIES DRAWINGS FOR TYPICAL MASONRY NON-BEARING WALL DETAILS.
5. SEE S4 SERIES DRAWINGS FOR TYPICAL COMPOSITE DECK DETAILS NOT SHOWN OR INDICATED ON THE S8 SERIES DRAWINGS.
6. TYPICAL DETAILS ARE PROVIDED FOR SPECIAL WALL OPENINGS. ALL OPENINGS THAT DO NOT FALL WITHIN PARAMETERS OF THE TYPICAL DETAILS MUST BE APPROVED BY THE STRUCTURAL ENGINEER.
7. CORNERS AND INTERSECTIONS OF SPECIAL CONCRETE WALLS SHALL HAVE A BOND BREAK UON. SEE DETAIL 8/S8-2002 FOR TYPICAL BOND BREAK DETAILS.
8. CONCRETE STRENGTH OF SPECIAL WALLS SHALL MEET THE FOLLOWING 28-DAY COMPRESSIVE STRENGTHS (f'c), UON:
   CONCRETE WALLS 5,000 PSI
   STEEL PLATE WALLS 5,000 PSI
9. STEEL AND CONNECTION MATERIALS FOR SPECIAL WALLS SHALL CONFORM TO THE MINIMUM REQUIREMENTS AS INDICATED IN THE STRUCTURAL GENERAL NOTES EXCEPT AS FOLLOWS:
   ANGLES: ASTM A572, MINIMUM YIELD STRENGTH 50 KSI
   STEEL WALL PLATES: ASTM A572, MINIMUM YIELD STRENGTH 50 KSI
   COLD-FORMED STUDS: MINIMUM YIELD STRENGTH 50 KSI
10. THE FOLLOWING NOMENCLATURE AND TABLES ARE USED TO IDENTIFY THE STRUCTURAL MAKE-UP OF THE SPECIAL WALLS:

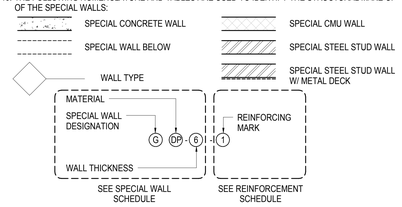

11. SEE S8-2001 AND S8-2002 FOR TYPICAL CONNECTION DETAILS FOR SPECIAL CONCRETE WALLS.
12. SEE S8-2003 FOR TYPICAL CONNECTION DETAILS FOR SPECIAL MASONRY WALLS.
13. SEE S8-2005 FOR TYPICAL CONNECTION DETAILS FOR STEEL SANDWICH PLATE WALLS.
14. SEE S8-2006 FOR TYPICAL CONNECTION DETAILS FOR SPECIAL COLD FORMED STEEL STUD WALLS.

SPECIAL WALL SCHEDULE

WALL ID	WALL THICKNESS (IN)	WALL MATERIAL	COMMENTS
GC-24	24	CONCRETE	
GC-20	20	CONCRETE	
GC-16	16	CONCRETE	
GC-12	12	CONCRETE	
GC-8	8	CONCRETE	
GC-7.5	7 1/2	CONCRETE	
GM-8	8	CMU	16" BLOCK LENGTH, TYP 18" BLOCK LENGTH, ALT.
GSP-8.5	8 1/2	STEEL SANDWICH PLATE	8" CONC CORE W/ (1) 1/2" THICK STL PLATE
GDP-8.75	8 3/4	STEEL SANDWICH PLATE	7" CONC CORE BETWEEN (2) 7/8" THICK STL PLATES
GDP-6	6	STEEL SANDWICH PLATE	5" CONC CORE BETWEEN (2) 1/2" THICK STL PLATES
GD-16	16	COLD-FORMED STEEL STUD W/ 1 1/2" 20 GA METAL DECK	1600S300-97 STUDS @ 12" O.C. UON
GS-6	6	COLD-FORMED STEEL STUD W/ GWB	600S250-97 STUDS @ 16" O.C. UON

REINFORCEMENT SCHEDULE

MARK	VERT BARS		HORIZ BARS*	
	BAR SIZE	BAR SPACING (IN)	BAR SIZE	BAR SPACING (IN)
1	6	12	6	12
2	6	8	6	12
3	6	6	6	12
4	6	4	6	12
5	5	24	5	24
6	5	16	5	16
7	5	12	5	12
8	5	8	5	12
9	5	6	5	12
10	5	4	5	12

* HORIZONTAL BAR CALL OUTS ARE SPECIFICALLY FOR SPECIAL CONCRETE WALLS. SPECIAL MASONRY WALLS TO HAVE STANDARD LADDER MESH JOINT REINFORCEMENT EVERY OTHER COURSE.

Damian Titus
Buildings
APPROVED
Under Directive 2 of 1975
AMENDED APPLICATION
Date: 05/03/2017
NYC Development Hub

0 2" 4" 8"

HUDSON YARDS - RETAIL PODIUM AND TOWER A

500 WEST 33RD STREET
New York, NY

Client
Related Companies
60 Columbus Circle
New York, NY 10023
TEL: 212.801.1000 FAX: 212.801.1048

Oxford Properties Group
320 Park Avenue, 17th Floor
New York, NY 10022
TEL: 212.986.7514 FAX: 212.986.7510

Architect
Kohn Pedersen Fox Associates
11 West 42nd Street
New York, New York 10036
TEL: 212.977.6500 FAX: 212.956.2526

Structural Engineer
Thornton Tomasetti, Inc.
51 Madison Avenue
New York, New York 10010
TEL: 917.661.7800 FAX: 718.661.7801

Mechanical, Electrical, Plumbing, Fire Protection
Jaros Baum & Bolles Consulting Engineers
80 Pine Street
New York, NY 10013
TEL: 212.530.9300 FAX: 212.269.5894

Retail Interior Design & Planning
Elkus-Manfredi
300 A Street
Boston, MA 02210
TEL: 617.426.1300

No.	Description	Date
1	D.O.B. AMENDMENT #2	10/15/2016

Key Plan

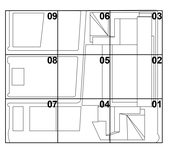

Issue Date: 10/15/2016
Project No. N11328.00
Drawn By: Author
Sheet Number

HYE -TA -S8-1006

STAIR A / STAIR B PART PLANS

Drawing Number
S8-1006
S-Scan Drawing Number
S-957.00

S8-1006
10/19/2016 10:44:49 AM
STAIR A / STAIR B PART PLANS
P:\NY\Projects\N11328.00\Drawings\Structural\Record\Issued\2016-10-16 - D.O.B. Amendment No.2\Revit - Rev- Removed\HYTA_S8-series.rvt

DEPT OF BUILDINGS 421496253 Job Number
ESA20050850 Scan Code

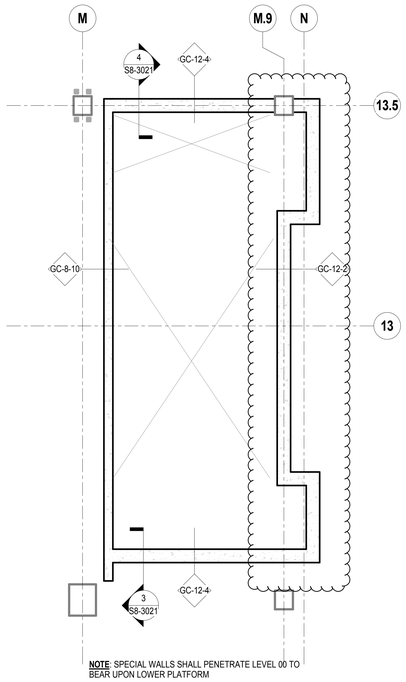

NOTE: SPECIAL WALLS SHALL PENETRATE LEVEL 00 TO BEAR UPON LOWER PLATFORM

1 PART PLAN - STAIR C/E - LEVEL 00
1/4" = 1'-0"

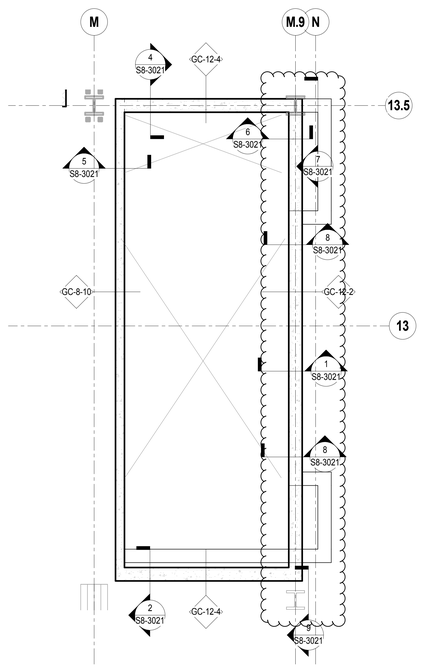

2 PART PLAN - STAIR C/E - LEVEL UPPER PLATFORM
1/4" = 1'-0"

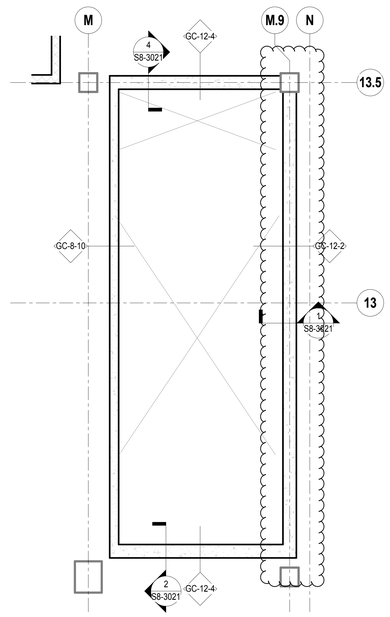

3 PART PLAN - STAIR C/E - LEVEL 02
1/4" = 1'-0"

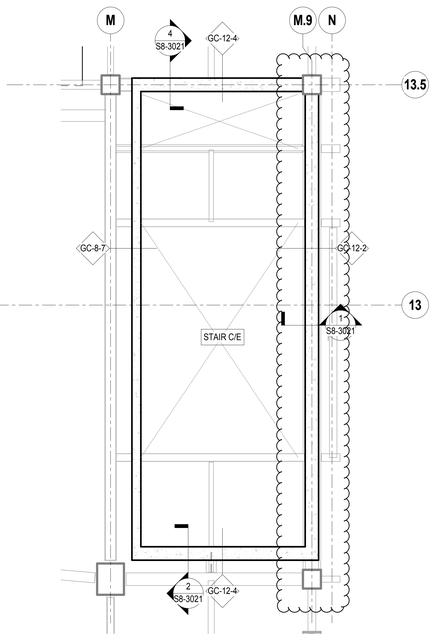

4 PART PLAN - STAIR C/E - LEVEL 03
1/4" = 1'-0"

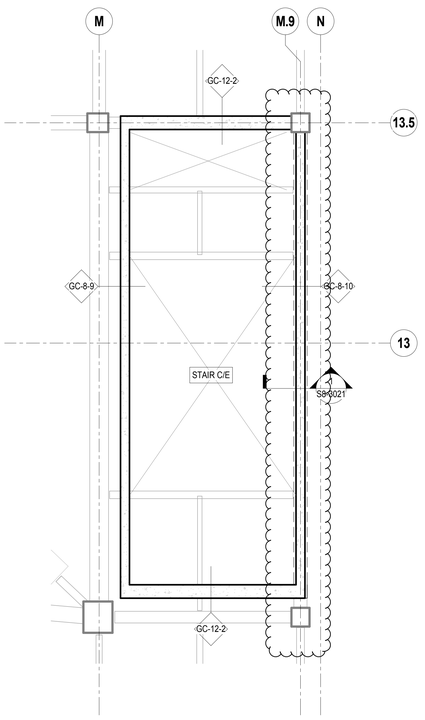

5 PART PLAN - STAIR C/E - LEVEL 04
1/4" = 1'-0"

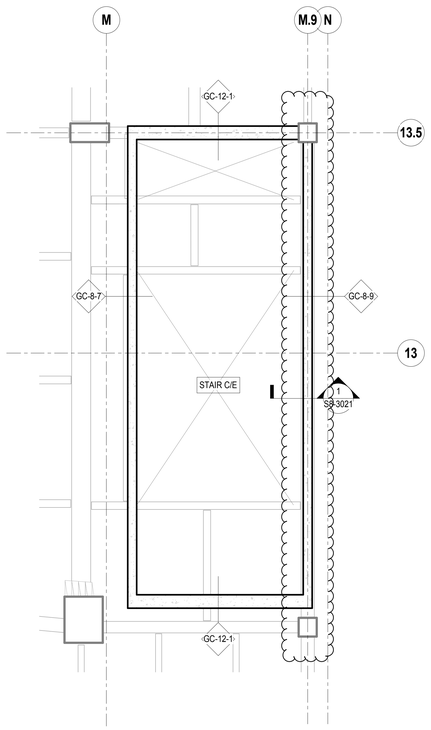

6 PART PLAN - STAIR C/E - LEVEL 05
1/4" = 1'-0"

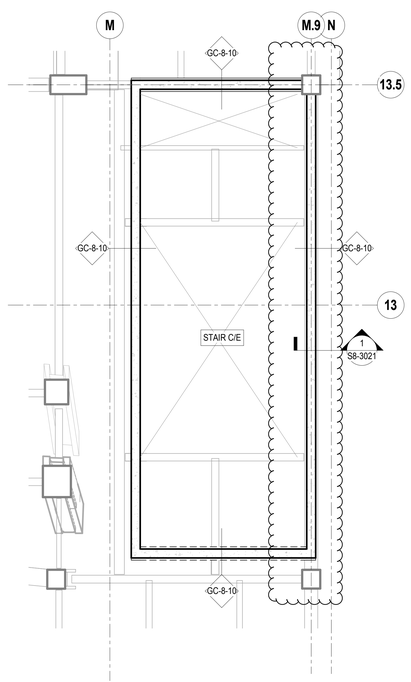

7 PART PLAN - STAIR C/E - LEVEL 06
1/4" = 1'-0"

SHEET NOTES:

1. S8 SERIES DRAWINGS IDENTIFY SPECIAL WALLS.
2. SEE ARCHITECTURAL DRAWINGS FOR ALL WALL LOCATIONS AND FINISHES. SPECIAL WALLS SHOWN HERE MAY NOT REFLECT THE FULL WALL THICKNESS OR MAKE-UP AND ARE INTENDED TO CONVEY THE STRUCTURAL PROPERTIES ONLY. WALL PENETRATIONS FOR DOORWAYS / MEP SERVICES ARE NOT SHOWN ON THE S8-SERIES DRAWINGS.
3. SEE S1 SERIES DRAWINGS FOR FLOOR FRAMING. FRAMING SHOWN IN GREY ON S8 SERIES DRAWINGS IS INCLUDED FOR REFERENCE ONLY.
4. SEE S4 SERIES DRAWINGS FOR TYPICAL MASONRY NON-BEARING WALL DETAILS.
5. SEE S4 SERIES DRAWINGS FOR TYPICAL COMPOSITE DECK DETAILS NOT SHOWN OR INDICATED ON THE S8 SERIES DRAWINGS.
6. TYPICAL DETAILS ARE PROVIDED FOR SPECIAL WALL OPENINGS. ALL OPENINGS THAT DO NOT FALL WITHIN PARAMETERS OF THE TYPICAL DETAILS MUST BE APPROVED BY THE STRUCTURAL ENGINEER.
7. CORNERS AND INTERSECTIONS OF SPECIAL CONCRETE WALLS SHALL HAVE A BOND BREAK UON. SEE DETAIL 8/S8-2002 FOR TYPICAL BOND BREAK DETAILS.
8. CONCRETE STRENGTH OF SPECIAL WALLS SHALL MEET THE FOLLOWING 28-DAY COMPRESSIVE STRENGTHS (f'c), UON:
   CONCRETE WALLS 5,000 PSI
   STEEL PLATE WALLS 5,000 PSI
9. STEEL AND CONNECTION MATERIALS FOR SPECIAL WALLS SHALL CONFORM TO THE MINIMUM REQUIREMENTS AS INDICATED IN THE STRUCTURAL GENERAL NOTES EXCEPT AS FOLLOWS:
   ANGLES: ASTM A572, MINIMUM YIELD STRENGTH 50 KSI
   STEEL WALL PLATES: ASTM A572, MINIMUM YIELD STRENGTH 50 KSI
   COLD-FORMED STUDS: MINIMUM YIELD STRENGTH 50 KSI
10. THE FOLLOWING NOMENCLATURE AND TABLES ARE USED TO IDENTIFY THE STRUCTURAL MAKE-UP OF THE SPECIAL WALLS:

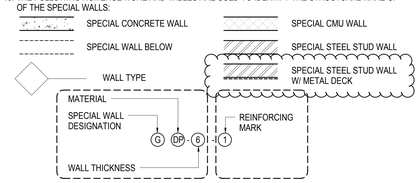

11. SEE S8-2001 AND S8-2002 FOR TYPICAL CONNECTION DETAILS FOR SPECIAL CONCRETE WALLS.
12. SEE S8-2003 FOR TYPICAL CONNECTION DETAILS FOR SPECIAL MASONRY WALLS.
13. SEE S8-2005 FOR TYPICAL CONNECTION DETAILS FOR STEEL SANDWICH PLATE WALLS.
14. SEE S8-2006 FOR TYPICAL CONNECTION DETAILS FOR SPECIAL COLD FORMED STEEL STUD WALLS.

SPECIAL WALL SCHEDULE

WALL ID	WALL THICKNESS (IN)	WALL MATERIAL	COMMENTS
GC-24	24	CONCRETE	
GC-20	20	CONCRETE	
GC-16	16	CONCRETE	
GC-12	12	CONCRETE	
GC-8	8	CONCRETE	
GC-7.5	7 1/2	CONCRETE	
GM-8	8	CMU	16" BLOCK LENGTH, TYP 18" BLOCK LENGTH, ALT.
GSP-8.5	8 1/2	STEEL SANDWICH PLATE	8" CONC CORE W/ (1) 1/2" THICK STL PLATE
GDP-8.75	8 3/4	STEEL SANDWICH PLATE	7" CONC CORE BETWEEN (2) 7/8" THICK STL PLATES
GDP-6	6	STEEL SANDWICH PLATE	5" CONC CORE BETWEEN (2) 1/2" THICK STL PLATES
GD-16	16	COLD-FORMED STEEL STUD W/ 1 1/2" 20 GA METAL DECK	1600S300-97 STUDS @ 12" O.C. UON
GS-6	6	COLD-FORMED STEEL STUD W/ GWB	600S250-97 STUDS @ 16" O.C. UON

REINFORCEMENT SCHEDULE

MARK	VERT BARS BAR SIZE	VERT BARS BAR SPACING (IN)	HORIZ BARS* BAR SIZE	HORIZ BARS* BAR SPACING (IN)
1	6	12	6	12
2	6	8	6	12
3	6	6	6	12
4	6	4	6	12
5	5	24	5	24
6	5	16	5	16
7	5	12	5	12
8	5	8	5	12
9	5	6	5	12
10	5	4	5	12

* HORIZONTAL BAR CALL OUTS ARE SPECIFICALLY FOR SPECIAL CONCRETE WALLS. SPECIAL MASONRY WALLS TO HAVE STANDARD LADDER MESH JOINT REINFORCEMENT EVERY OTHER COURSE.

Damian Titus
Buildings
APPROVED
Under Directive 2 of 1975
AMENDED APPLICATION
Date: 05/03/2017
NYC Development Hub

0 4' 8' 16'

N

HUDSON YARDS - RETAIL PODIUM AND TOWER A

500 WEST 33RD STREET
New York, NY

Client
Related Companies
60 Columbus Circle
New York, NY 10023
TEL: 212.801.1000 FAX: 212.801.1048

Oxford Properties Group
320 Park Avenue, 17th Floor
New York, NY 10022
TEL: 212.986.7514 FAX: 212.986.7510

Architect
Kohn Pedersen Fox Associates
11 West 42nd Street
New York, New York 10036
TEL: 212.977.6500 FAX: 212.956.2526

Structural Engineer
Thornton Tomasetti, Inc.
51 Madison Avenue
New York, New York 10010
TEL: 917.661.7800 FAX: 718.661.7801

Mechanical, Electrical, Plumbing, Fire Protection
Jaros Baum & Bolles Consulting Engineers
80 Pine Street
New York, NY 10013
TEL: 212.530.9300 FAX: 212.269.5894

Retail Interior Design & Planning
Elkus-Manfredi
300 A Street
Boston, MA 02210
TEL: 617.426.1300

No.	Description	Date
2	D.O.B. AMENDMENT #2	10/15/2016
1	D.O.B. BUILDING PERMIT FILING	12/10/2014

Key Plan

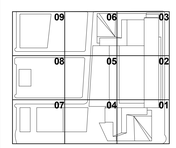

Issue Date: 12/10/2014
Project No. N11328.00
Drawn By Author
Sheet Number

STATE OF NEW YORK
025 LICENSED ARCHITECT

HYE -TA -S8-1021

Drawing Title

STAIR C/E PART PLANS

Drawing Number
S8-1021
Bchan Drawing Number
S-958.01

© 2013 KOHN PEDERSEN FOX ASSOCIATES PC. All rights reserved.

S8-1021 STAIR C/E PART PLANS
10/19/2016 10:45:44 AM P:\NY\Projects\N11328.00\Drawings\Structural\Record\Issued\2016-10-16 - D.O.B. Amendment No.2\Rev5 - Rev. Removed\HYTA_S8-series.rvt

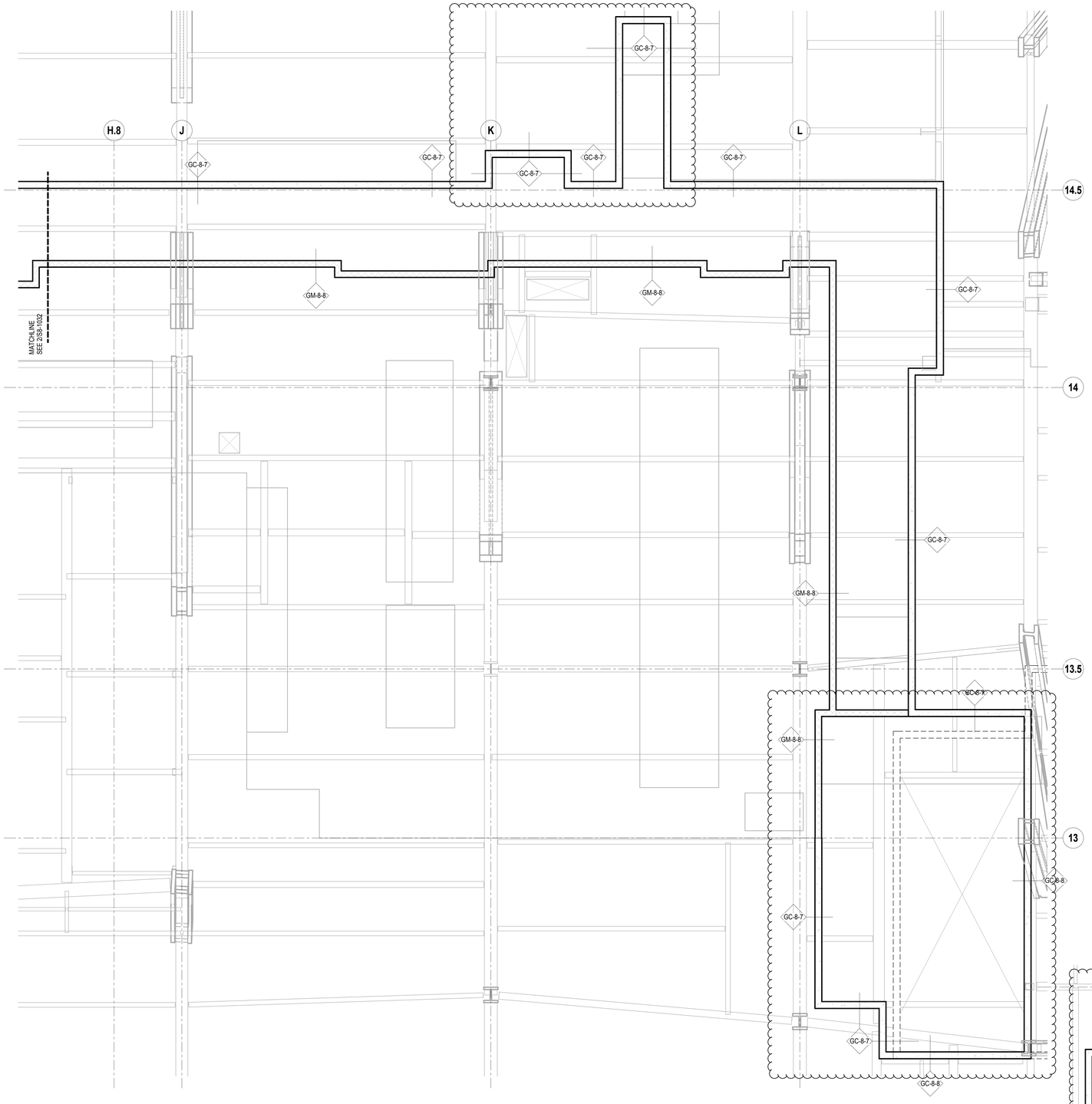

2 PART PLAN - STAIR C/E LEVEL 08 - SOUTH
1/4" = 1'-0"

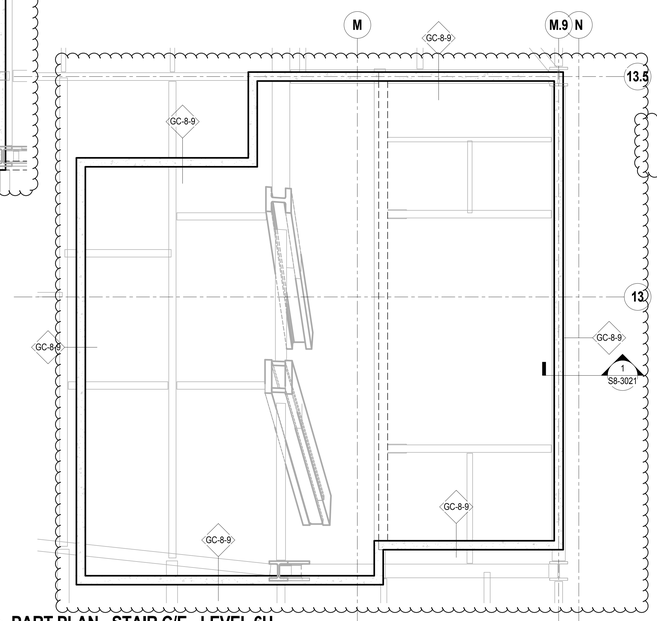

1 PART PLAN - STAIR C/E - LEVEL 6U
1/4" = 1'-0"

SHEET NOTES:

1. S8 SERIES DRAWINGS IDENTIFY SPECIAL WALLS.
2. SEE ARCHITECTURAL DRAWINGS FOR ALL WALL LOCATIONS AND FINISHES. SPECIAL WALLS SHOWN HERE MAY NOT REFLECT THE FULL WALL THICKNESS OR MAKE-UP AND ARE INTENDED TO CONVEY THE STRUCTURAL PROPERTIES ONLY. WALL PENETRATIONS FOR DOORWAYS / MEP SERVICES ARE NOT SHOWN ON THE S8-SERIES DRAWINGS.
3. SEE S1 SERIES DRAWINGS FOR FLOOR FRAMING. FRAMING SHOWN IN GREY ON S8 SERIES DRAWINGS IS INCLUDED FOR REFERENCE ONLY.
4. SEE S4 SERIES DRAWINGS FOR TYPICAL MASONRY NON-BEARING WALL DETAILS.
5. SEE S4 SERIES DRAWINGS FOR TYPICAL COMPOSITE DECK DETAILS NOT SHOWN OR INDICATED ON THE S8 SERIES DRAWINGS.
6. TYPICAL DETAILS ARE PROVIDED FOR SPECIAL WALL OPENINGS. ALL OPENINGS THAT DO NOT FALL WITHIN PARAMETERS OF THE TYPICAL DETAILS MUST BE APPROVED BY THE STRUCTURAL ENGINEER.
7. CORNERS AND INTERSECTIONS OF SPECIAL CONCRETE WALLS SHALL HAVE A BOND BREAK UON. SEE DETAIL 8/S8-2002 FOR TYPICAL BOND BREAK DETAILS.
8. CONCRETE STRENGTH OF SPECIAL WALLS SHALL MEET THE FOLLOWING 28-DAY COMPRESSIVE STRENGTHS (f'c), UON:
   - CONCRETE WALLS: 5,000 PSI
   - STEEL PLATE WALLS: 5,000 PSI
9. STEEL AND CONNECTION MATERIALS FOR SPECIAL WALLS SHALL CONFORM TO THE MINIMUM REQUIREMENTS AS INDICATED IN THE STRUCTURAL GENERAL NOTES EXCEPT AS FOLLOWS:
   - ANGLES: ASTM A572, MINIMUM YIELD STRENGTH 50 KSI
   - STEEL WALL PLATES: ASTM A572, MINIMUM YIELD STRENGTH 50 KSI
   - COLD-FORMED STUDS: MINIMUM YIELD STRENGTH 50 KSI
10. THE FOLLOWING NOMENCLATURE AND TABLES ARE USED TO IDENTIFY THE STRUCTURAL MAKE-UP OF THE SPECIAL WALLS:

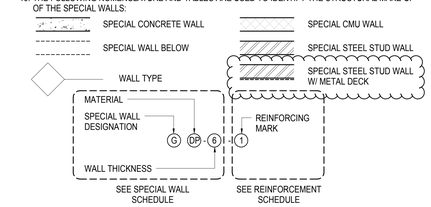

11. SEE S8-2001 AND S8-2002 FOR TYPICAL CONNECTION DETAILS FOR SPECIAL CONCRETE WALLS.
12. SEE S8-2003 FOR TYPICAL CONNECTION DETAILS FOR SPECIAL MASONRY WALLS.
13. SEE S8-2005 FOR TYPICAL CONNECTION DETAILS FOR STEEL SANDWICH PLATE WALLS.
14. SEE S8-2006 FOR TYPICAL CONNECTION DETAILS FOR SPECIAL COLD FORMED STEEL STUD WALLS.

SPECIAL WALL SCHEDULE

WALL ID	WALL THICKNESS (IN)	WALL MATERIAL	COMMENTS
GC-24	24	CONCRETE	
GC-20	20	CONCRETE	
GC-16	16	CONCRETE	
GC-12	12	CONCRETE	
GC-8	8	CONCRETE	
GC-7.5	7 1/2	CONCRETE	
GM-8	8	CMU	16" BLOCK LENGTH, TYP 18" BLOCK LENGTH, ALT.
GSP-8.5	8 1/2	STEEL SANDWICH PLATE	8" CONC CORE W/ (1) 1/2" THICK STL PLATE
GDP-8.75	8 3/4	STEEL SANDWICH PLATE	7" CONC CORE BETWEEN (2) 7/8" THICK STL PLATES
GDP-6	6	STEEL SANDWICH PLATE	5" CONC CORE BETWEEN (2) 1/2" THICK STL PLATES
GD-16	16	COLD-FORMED STEEL STUD W/ 1 1/2" 20 GA METAL DECK	1600S300-97 STUDS @ 12" O.C. UON
GS-6	6	COLD-FORMED STEEL STUD W/ GWB	600S250-97 STUDS @ 16" O.C. UON

REINFORCEMENT SCHEDULE

MARK	VERT BARS BAR SIZE	VERT BARS BAR SPACING (IN)	HORIZ BARS* BAR SIZE	HORIZ BARS* BAR SPACING (IN)
1	6	12	6	12
2	6	8	6	12
3	6	6	6	12
4	6	4	6	12
5	5	24	5	24
6	5	16	5	16
7	5	12	5	12
8	5	8	5	12
9	5	6	5	12
10	5	4	5	12

* HORIZONTAL BAR CALL OUTS ARE SPECIFICALLY FOR SPECIAL CONCRETE WALLS. SPECIAL MASONRY WALLS TO HAVE STANDARD LADDER MESH JOINT REINFORCEMENT EVERY OTHER COURSE.

Damian Titus
DOB Buildings
APPROVED
Under Directive 2 of 1975
AMENDED APPLICATION
Date: 05/03/2017
NYC Development Hub

0 4' 8' 16'

N

HUDSON YARDS - RETAIL PODIUM AND TOWER A

500 WEST 33RD STREET
New York, NY

Client
Related Companies
60 Columbus Circle
New York, NY 10023
TEL: 212.801.1000 FAX: 212.801.1048

Oxford Properties Group
320 Park Avenue, 17th Floor
New York, NY 10022
TEL: 212.986.7514 FAX: 212.986.7510

Architect
Kohn Pedersen Fox Associates
11 West 42nd Street
New York, New York 10036
TEL: 212.977.6500 FAX: 212.956.2526

Structural Engineer
Thornton Tomasetti, Inc.
51 Madison Avenue
New York, New York 10010
TEL: 917.661.7800 FAX: 718.661.7801

Mechanical, Electrical, Plumbing, Fire Protection
Jaros Baum & Bolles Consulting Engineers
80 Pine Street
New York, NY 10013
TEL: 212.530.9300 FAX: 212.269.5894

Retail Interior Design & Planning
Elkus-Manfredi
300 A Street
Boston, MA 02210
TEL: 617.426.1300

No.	Description	Date
2	D.O.B. AMENDMENT #2	10/15/2016
1	D.O.B. BUILDING PERMIT FILING	12/10/2014

Key Plan

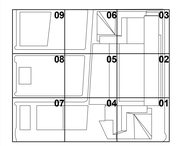

Issue Date: 12/10/2014
Project No. N11328.00
Drawn By Author
Sheet Number

HYE -TA -S8-1022

Drawing Title

STAIR C/E PART PLANS

Drawing Number
S8-1022
B-Scan Drawing Number
S-959.01

© 2013 KOHN PEDERSEN FOX ASSOCIATES PC. All rights reserved.

S8-1022 10/19/2016 10:45:53 AM STAIR C/E PART PLANS P:\NY\Projects\N11328.00\Drawings\Structural\Record\Issued\2016-10-16 - D.O.B. Amendment No.2\Revit - Rev. Removed\HYTA_S8-series.rvt

DEPT OF BUILDINGS X11328.00 Job Number
E1521.00 Scan Code

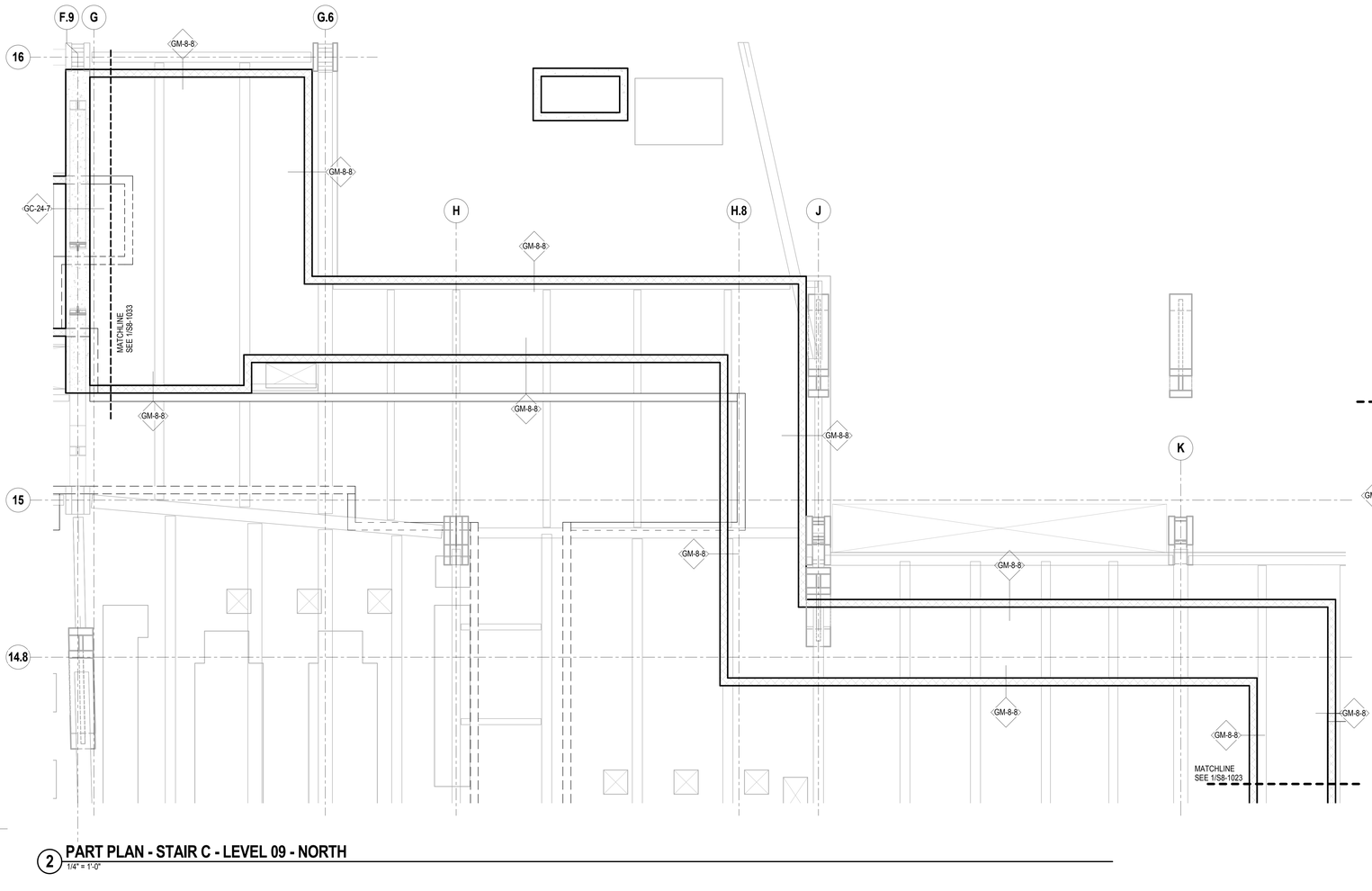

2 PART PLAN - STAIR C - LEVEL 09 - NORTH
1/4" = 1'-0"

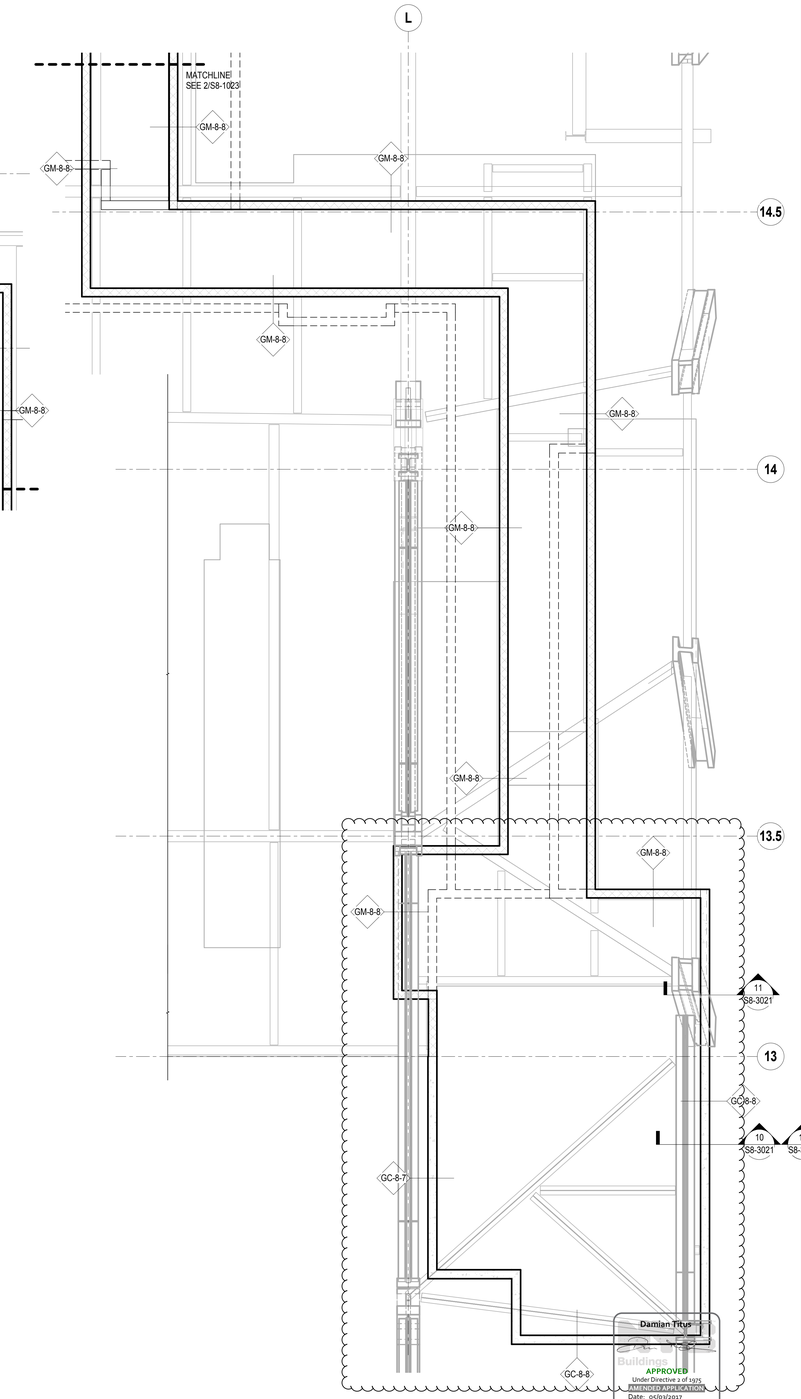

1 PART PLAN - STAIR C - LEVEL 09 - SOUTH
1/4" = 1'-0"

NOTE:
FOR SPECIAL WALL PLAN NOTES PLEASE SEE SHEET S8-1022

HUDSON YARDS - RETAIL PODIUM AND TOWER A

500 WEST 33RD STREET
New York, NY

Client
Related Companies
60 Columbus Circle
New York, NY 10023
TEL: 212.801.1000 FAX: 212.801.1048

Oxford Properties Group
320 Park Avenue, 17th Floor
New York, NY 10022
TEL: 212.986.7514 FAX: 212.986.7510

Architect
Kohn Pedersen Fox Associates
11 West 42nd Street
New York, New York 10036
TEL: 212.977.6500 FAX: 212.956.2526

Structural Engineer
Thornton Tomasetti, Inc.
51 Madison Avenue
New York, New York 10010
TEL: 917.661.7800 FAX: 718.661.7801

Mechanical, Electrical, Plumbing, Fire Protection
Jaros Baum & Bolles Consulting Engineers
80 Pine Street
New York, NY 10013
TEL: 212.530.9300 FAX: 212.269.5894

Retail Interior Design & Planning
Elkus-Manfredi
300 A Street
Boston, MA 02210
TEL: 617.426.1300

No.	Description	Date
2	D.O.B. AMENDMENT #2	10/15/2016
1	D.O.B. BUILDING PERMIT FILING	12/10/2014

Key Plan

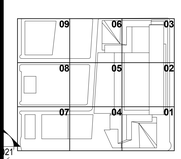

Issue Date: 12/10/2014
Project No. N11328.00
Drawn By Author
Sheet Number

Damian Titus
APPROVED
Under Directive 2 of 1975
EXTENDED APPLICATION
Date: 05/03/2017
NYC Development Hub

HYE -TA -S8-1023
Drawing Title

STAIR C/E PART PLANS

Drawing Number
S8-1023
B-Scan Drawing Number
S-960.01

SHEET 407 OF 443

© 2013 KOHN PEDERSEN FOX ASSOCIATES PC. All rights reserved.

S8-1023
10/19/2016 10:46:01 AM
S8140 CE PART PLANS
P:\NY\Projects\N11328.00\Drawings\Structural\Record\Issued\2016-10-18 - D.O.B. Amendment No.2\Revit - Rev. Removed\HYTA_S8-series.rvt

DEPT OF BUILDINGS 421490925 Job Number
ESQ7097930 Scan Code

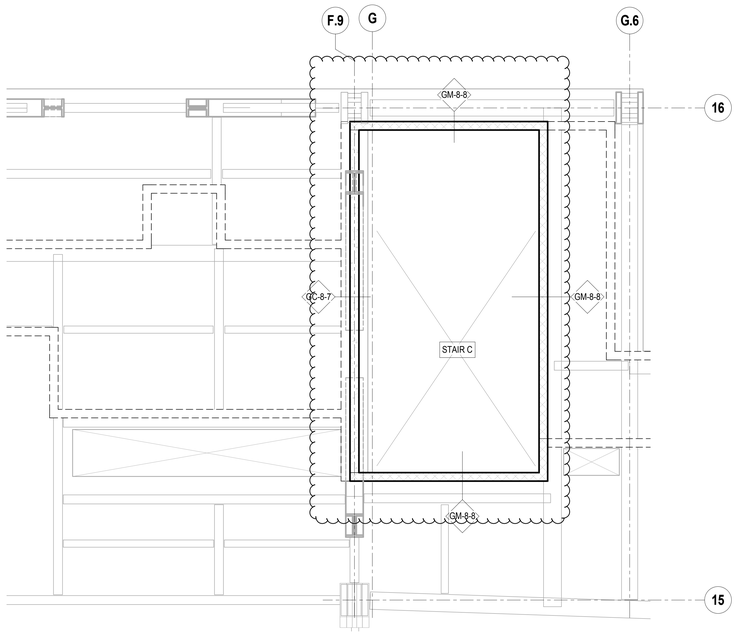

1 PART PLAN - STAIR C - LEVEL 9U
1/4" = 1'-0"

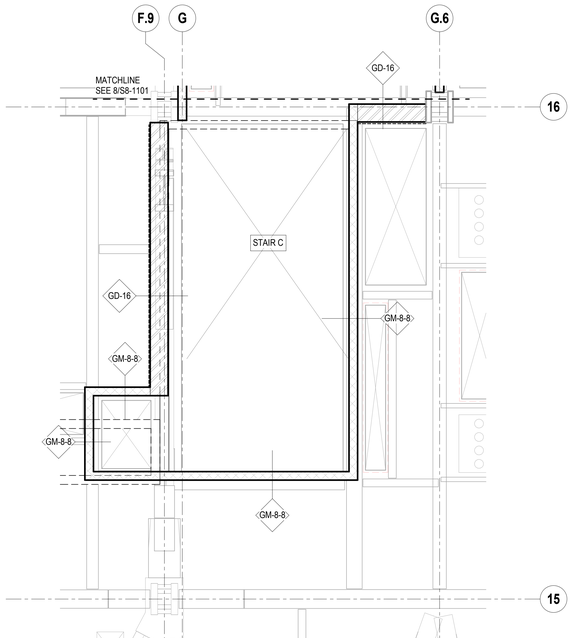

2 PART PLAN - STAIR C -TYPICAL LEVEL 10 THRU 20
1/4" = 1'-0"

SHEET NOTES:

1. S8 SERIES DRAWINGS IDENTIFY SPECIAL WALLS.
2. SEE ARCHITECTURAL DRAWINGS FOR ALL WALL LOCATIONS AND FINISHES. SPECIAL WALLS SHOWN HERE MAY NOT REFLECT THE FULL WALL THICKNESS OR MAKE-UP AND ARE INTENDED TO CONVEY THE STRUCTURAL PROPERTIES ONLY. WALL PENETRATIONS FOR DOORWAYS / MEP SERVICES ARE NOT SHOWN ON THE S8-SERIES DRAWINGS.
3. SEE S1 SERIES DRAWINGS FOR FLOOR FRAMING. FRAMING SHOWN IN GREY ON S8 SERIES DRAWINGS IS INCLUDED FOR REFERENCE ONLY.
4. SEE S4 SERIES DRAWINGS FOR TYPICAL MASONRY NON-BEARING WALL DETAILS.
5. SEE S4 SERIES DRAWINGS FOR TYPICAL COMPOSITE DECK DETAILS NOT SHOWN OR INDICATED ON THE S8 SERIES DRAWINGS.
6. TYPICAL DETAILS ARE PROVIDED FOR SPECIAL WALL OPENINGS. ALL OPENINGS THAT DO NOT FALL WITHIN PARAMETERS OF THE TYPICAL DETAILS MUST BE APPROVED BY THE STRUCTURAL ENGINEER.
7. CORNERS AND INTERSECTIONS OF SPECIAL CONCRETE WALLS SHALL HAVE A BOND BREAK UON. SEE DETAIL 8/S8-2002 FOR TYPICAL BOND BREAK DETAILS.
8. CONCRETE STRENGTH OF SPECIAL WALLS SHALL MEET THE FOLLOWING 28-DAY COMPRESSIVE STRENGTHS (f'c), UON:
   - CONCRETE WALLS 5,000 PSI
   - STEEL PLATE WALLS 5,000 PSI
9. STEEL AND CONNECTION MATERIALS FOR SPECIAL WALLS SHALL CONFORM TO THE MINIMUM REQUIREMENTS AS INDICATED IN THE STRUCTURAL GENERAL NOTES EXCEPT AS FOLLOWS:
   - ANGLES: ASTM A572, MINIMUM YIELD STRENGTH 50 KSI
   - STEEL WALL PLATES: ASTM A572, MINIMUM YIELD STRENGTH 50 KSI
   - COLD-FORMED STUDS: MINIMUM YIELD STRENGTH 50 KSI
10. THE FOLLOWING NOMENCLATURE AND TABLES ARE USED TO IDENTIFY THE STRUCTURAL MAKE-UP OF THE SPECIAL WALLS:

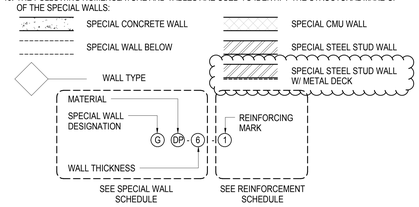

11. SEE S8-2001 AND S8-2002 FOR TYPICAL CONNECTION DETAILS FOR SPECIAL CONCRETE WALLS.
12. SEE S8-2003 FOR TYPICAL CONNECTION DETAILS FOR SPECIAL MASONRY WALLS.
13. SEE S8-2005 FOR TYPICAL CONNECTION DETAILS FOR STEEL SANDWICH PLATE WALLS.
14. SEE S8-2006 FOR TYPICAL CONNECTION DETAILS FOR SPECIAL COLD FORMED STEEL STUD WALLS.

SPECIAL WALL SCHEDULE

WALL ID	WALL THICKNESS (IN)	WALL MATERIAL	COMMENTS
GC-24	24	CONCRETE	
GC-20	20	CONCRETE	
GC-16	16	CONCRETE	
GC-12	12	CONCRETE	
GC-8	8	CONCRETE	
GC-7.5	7 1/2	CONCRETE	
GM-8	8	CMU	16" BLOCK LENGTH, TYP 18" BLOCK LENGTH, ALT.
GSP-8.5	8 1/2	STEEL SANDWICH PLATE	8" CONC CORE W/ (1) 1/2" THICK STL PLATE
GDP-8.75	8 3/4	STEEL SANDWICH PLATE	7" CONC CORE BETWEEN (2) 7/8" THICK STL PLATES
GDP-6	6	STEEL SANDWICH PLATE	5" CONC CORE BETWEEN (2) 1/2" THICK STL PLATES
GD-16	16	COLD-FORMED STEEL STUD W/ 1 1/2" 20 GA METAL DECK	1600S300-97 STUDS @ 12" O.C. UON
GS-6	6	COLD-FORMED STEEL STUD W/ GWB	600S250-97 STUDS @ 16" O.C. UON

REINFORCEMENT SCHEDULE

MARK	VERT BARS BAR SIZE	VERT BARS BAR SPACING (IN)	HORIZ BARS* BAR SIZE	HORIZ BARS* BAR SPACING (IN)
1	6	12	6	12
2	6	8	6	12
3	6	6	6	12
4	6	4	6	12
5	5	24	5	24
6	5	16	5	16
7	5	12	5	12
8	5	8	5	12
9	5	6	5	12
10	5	4	5	12

* HORIZONTAL BAR CALL OUTS ARE SPECIFICALLY FOR SPECIAL CONCRETE WALLS. SPECIAL MASONRY WALLS TO HAVE STANDARD LADDER MESH JOINT REINFORCEMENT EVERY OTHER COURSE.

Damian Titus
Buildings
APPROVED
Under Directive 2 of 1975
AMENDED APPLICATION
Date: 05/03/2017
NYC Development Hub

0 4' 8' 16'

N

HUDSON YARDS - RETAIL PODIUM AND TOWER A

500 WEST 33RD STREET
New York, NY

Client
Related Companies
60 Columbus Circle
New York, NY 10023
TEL: 212.801.1000 FAX: 212.801.1048

Oxford Properties Group
320 Park Avenue, 17th Floor
New York, NY 10022
TEL: 212.986.7514 FAX: 212.986.7510

Architect
Kohn Pedersen Fox Associates
11 West 42nd Street
New York, New York 10036
TEL: 212.977.6500 FAX: 212.956.2526

Structural Engineer
Thornton Tomasetti, Inc.
51 Madison Avenue
New York, New York 10010
TEL: 917.661.7800 FAX: 718.661.7801

Mechanical, Electrical, Plumbing, Fire Protection
Jaros Baum & Bolles Consulting Engineers
80 Pine Street
New York, NY 10013
TEL: 212.530.9300 FAX: 212.269.5894

Retail Interior Design & Planning
Elkus-Manfredi
300 A Street
Boston, MA 02210
TEL: 617.426.1300

No.	Description	Date
2	D.O.B. AMENDMENT #2	10/15/2016
1	D.O.B. BUILDING PERMIT FILING	12/10/2014

Key Plan

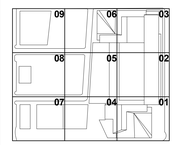

Issue Date: 12/10/2014
Project No. N11328.00
Drawn By: Author
Sheet Number

HYE -TA -S8-1024

Drawing Title

STAIR C/E PART PLANS

Drawing Number
S8-1024
S-Scan Drawing Number
S-961.01

© 2013 KOHN PEDERSEN FOX ASSOCIATES PC. All rights reserved.

S8-1024 STAIR C/E PART PLANS
10/19/2016 10:46:09 AM P:\NY\Projects\N11328.00\Drawings\Structural\Record\Issued\2016-10-16 - D.O.B. Amendment No.2\Revit - Rev - Removed\HYTA_S8-series.rvt

DEPT OF BUILDINGS 421490025 Job Number
ES1709544451 Scan Code

SHEET NOTES:

1. S8 SERIES DRAWINGS IDENTIFY SPECIAL WALLS.
2. SEE ARCHITECTURAL DRAWINGS FOR ALL WALL LOCATIONS AND FINISHES. SPECIAL WALLS SHOWN HERE MAY NOT REFLECT THE FULL WALL THICKNESS OR MAKE-UP AND ARE INTENDED TO CONVEY THE STRUCTURAL PROPERTIES ONLY. WALL PENETRATIONS FOR DOORWAYS / MEP SERVICES ARE NOT SHOWN ON THE S8-SERIES DRAWINGS.
3. SEE S1 SERIES DRAWINGS FOR FLOOR FRAMING. FRAMING SHOWN IN GREY ON S8 SERIES DRAWINGS IS INCLUDED FOR REFERENCE ONLY.
4. SEE S4 SERIES DRAWINGS FOR TYPICAL MASONRY NON-BEARING WALL DETAILS.
5. SEE S4 SERIES DRAWINGS FOR TYPICAL COMPOSITE DECK DETAILS NOT SHOWN OR INDICATED ON THE S8 SERIES DRAWINGS.
6. TYPICAL DETAILS ARE PROVIDED FOR SPECIAL WALL OPENINGS. ALL OPENINGS THAT DO NOT FALL WITHIN PARAMETERS OF THE TYPICAL DETAILS MUST BE APPROVED BY THE STRUCTURAL ENGINEER.
7. CORNERS AND INTERSECTIONS OF SPECIAL CONCRETE WALLS SHALL HAVE A BOND BREAK UON. SEE DETAIL 8/S8-2002 FOR TYPICAL BOND BREAK DETAILS.
8. CONCRETE STRENGTH OF SPECIAL WALLS SHALL MEET THE FOLLOWING 28-DAY COMPRESSIVE STRENGTHS (f'c), UON:
   - CONCRETE WALLS 5,000 PSI
   - STEEL PLATE WALLS 5,000 PSI
9. STEEL AND CONNECTION MATERIALS FOR SPECIAL WALLS SHALL CONFORM TO THE MINIMUM REQUIREMENTS AS INDICATED IN THE STRUCTURAL GENERAL NOTES EXCEPT AS FOLLOWS:
   - ANGLES: ASTM A572, MINIMUM YIELD STRENGTH 50 KSI
   - STEEL WALL PLATES: ASTM A572, MINIMUM YIELD STRENGTH 50 KSI
   - COLD-FORMED STUDS: MINIMUM YIELD STRENGTH 50 KSI
10. THE FOLLOWING NOMENCLATURE AND TABLES ARE USED TO IDENTIFY THE STRUCTURAL MAKE-UP OF THE SPECIAL WALLS:

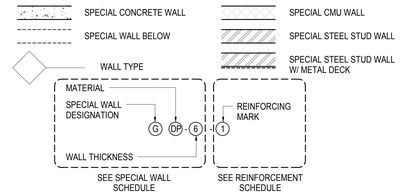

11. SEE S8-2001 AND S8-2002 FOR TYPICAL CONNECTION DETAILS FOR SPECIAL CONCRETE WALLS.
12. SEE S8-2003 FOR TYPICAL CONNECTION DETAILS FOR SPECIAL MASONRY WALLS.
13. SEE S8-2005 FOR TYPICAL CONNECTION DETAILS FOR STEEL SANDWICH PLATE WALLS.
14. SEE S8-2006 FOR TYPICAL CONNECTION DETAILS FOR SPECIAL COLD FORMED STEEL STUD WALLS.

SPECIAL WALL SCHEDULE

WALL ID	WALL THICKNESS (IN)	WALL MATERIAL	COMMENTS
GC-24	24	CONCRETE	
GC-20	20	CONCRETE	
GC-16	16	CONCRETE	
GC-12	12	CONCRETE	
GC-8	8	CONCRETE	
GC-7.5	7 1/2	CONCRETE	
GM-8	8	CMU	16" BLOCK LENGTH, TYP 18" BLOCK LENGTH, ALT.
GSP-8.5	8 1/2	STEEL SANDWICH PLATE	8" CONC CORE W/ (1) 1/2" THICK STL PLATE
GDP-8.75	8 3/4	STEEL SANDWICH PLATE	7" CONC CORE BETWEEN (2) 7/8" THICK STL PLATES
GDP-6	6	STEEL SANDWICH PLATE	5" CONC CORE BETWEEN (2) 1/2" THICK STL PLATES
GD-16	16	COLD-FORMED STEEL STUD W/ 1 1/2" 20 GA METAL DECK	1600S300-97 STUDS @ 12" O.C. UON
GS-6	6	COLD-FORMED STEEL STUD W/ GWB	600S250-97 STUDS @ 16" O.C. UON

REINFORCEMENT SCHEDULE

MARK	VERT BARS BAR SIZE	VERT BARS BAR SPACING (IN)	HORIZ BARS* BAR SIZE	HORIZ BARS* BAR SPACING (IN)
1	6	12	6	12
2	6	8	6	12
3	6	6	6	12
4	6	4	6	12
5	5	24	5	24
6	5	16	5	16
7	5	12	5	12
8	5	8	5	12
9	5	6	5	12
10	5	4	5	12

* HORIZONTAL BAR CALL OUTS ARE SPECIFICALLY FOR SPECIAL CONCRETE WALLS. SPECIAL MASONRY WALLS TO HAVE STANDARD LADDER MESH JOINT REINFORCEMENT EVERY OTHER COURSE.

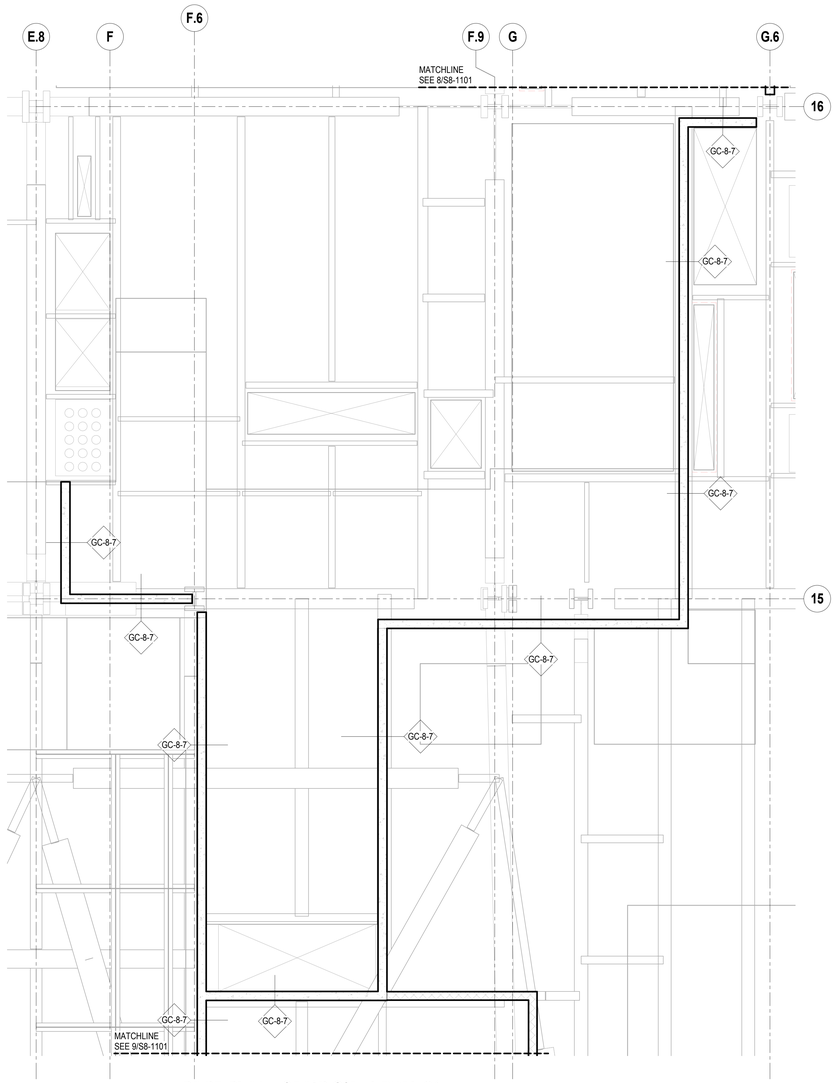

1 PART PLAN - STAIR C/E - LEVEL 21
1/4" = 1'-0"

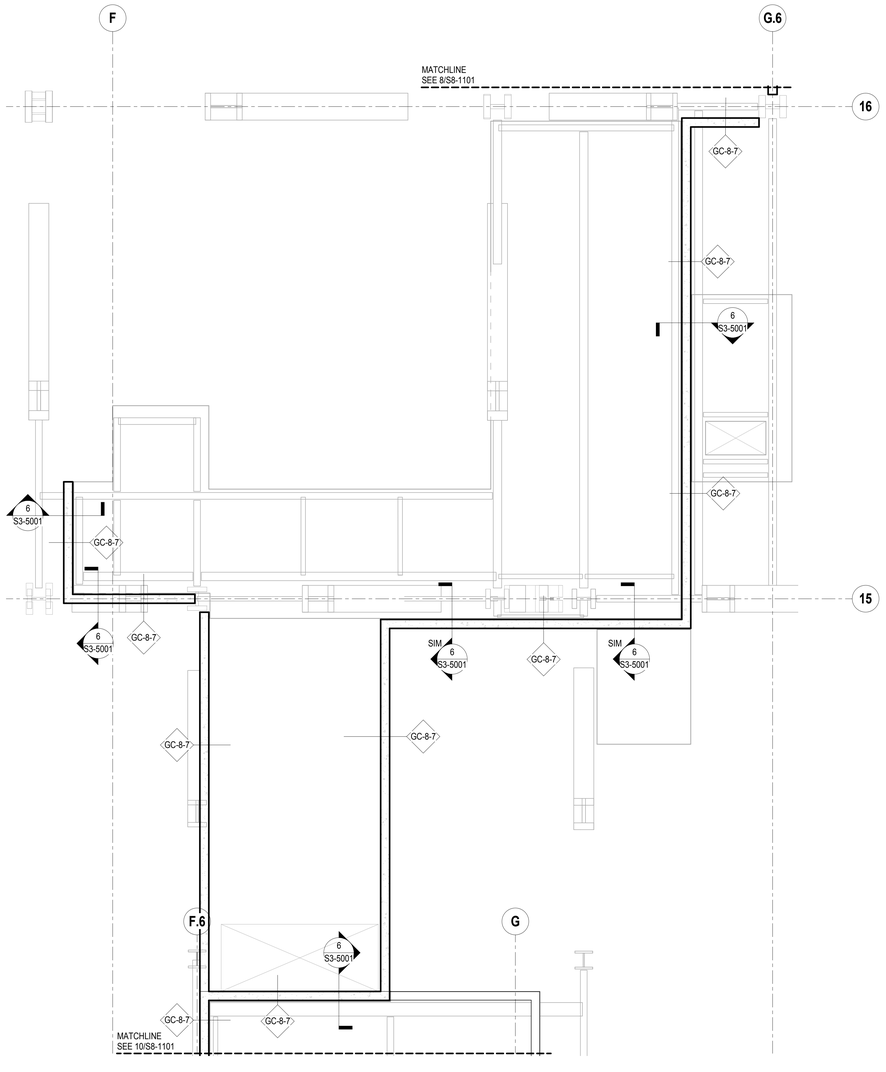

2 PART PLAN - STAIR C/E - LEVEL 21U
1/4" = 1'-0"

Damian Titus
Buildings
APPROVED
Under Directive 2 of 1975
MEMO OF APPLICATION
Date: 05/03/2017
NYC Development Hub

0 4' 8' 16'

N

HUDSON YARDS - RETAIL PODIUM AND TOWER A
500 WEST 33RD STREET
New York, NY

Client
Related Companies
60 Columbus Circle
New York, NY 10023
TEL: 212.801.1000 FAX: 212.801.1048

Oxford Properties Group
320 Park Avenue, 17th Floor
New York, NY 10022
TEL: 212.986.7514 FAX: 212.986.7510

Architect
Kohn Pedersen Fox Associates
11 West 42nd Street
New York, New York 10036
TEL: 212.977.6500 FAX: 212.956.2526

Structural Engineer
Thornton Tomasetti, Inc.
51 Madison Avenue
New York, New York 10010
TEL: 917.661.7800 FAX: 718.661.7801

Mechanical, Electrical, Plumbing, Fire Protection
Jaros Baum & Bolles Consulting Engineers
80 Pine Street
New York, NY 10013
TEL: 212.530.9300 FAX: 212.269.5894

Retail Interior Design & Planning
Elkus-Manfredi
300 A Street
Boston, MA 02210
TEL: 617.426.1300

No.	Description	Date
1	D.O.B. AMENDMENT #2	10/15/2016

Key Plan

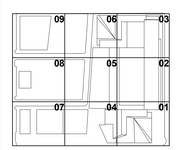

Issue Date: 10/15/2016
Project No. N11328.00
Drawn By Author
Sheet Number

HYE -TA -S8-1025
Drawing Title

STAIR C/E PART PLANS

Drawing Number
S8-1025
S-Scan Drawing Number
S-962.00

© 2013 KOHN PEDERSEN FOX ASSOCIATES PC All rights reserved.

S8-1025
10/19/2016 10:46:17 AM
STAIR C/E PART PLANS
P:\NY\Projects\N11328.00\Drawings\Structural\Record\Issues\2016-10-16 - D.O.B. Amendment No.2\Revit - Rev. Removed\HYTA_S8-series.rvt

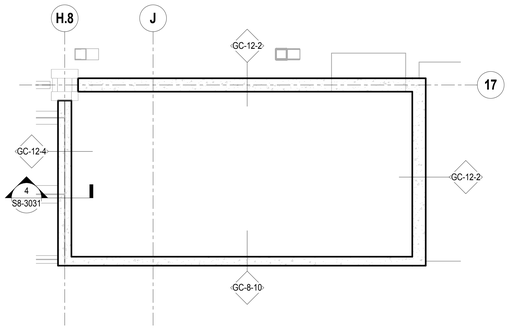

1 PART PLAN - STAIR D - LOWER PLATFORM
1/4" = 1'-0"

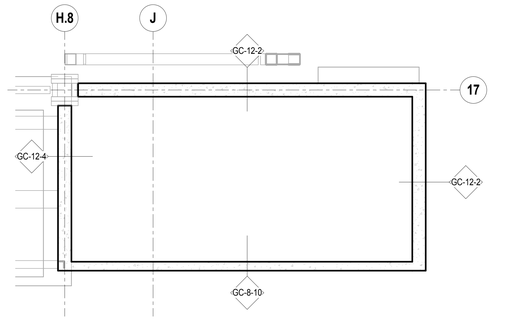

2 PART PLAN - STAIR D - UPPER PLATFORM
1/4" = 1'-0"

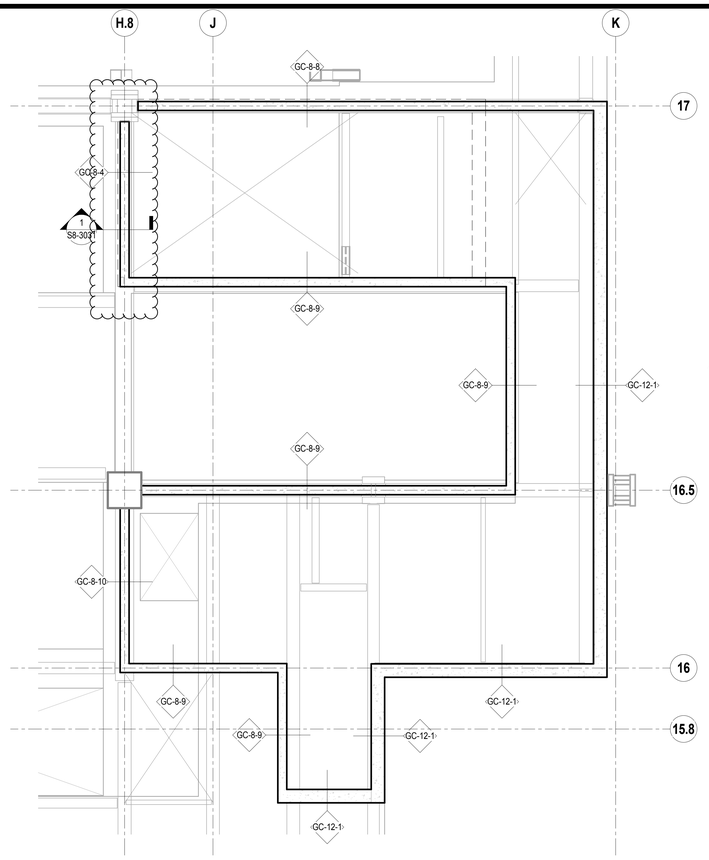

3 PART PLAN - STAIR D - LEVEL 01
1/4" = 1'-0"

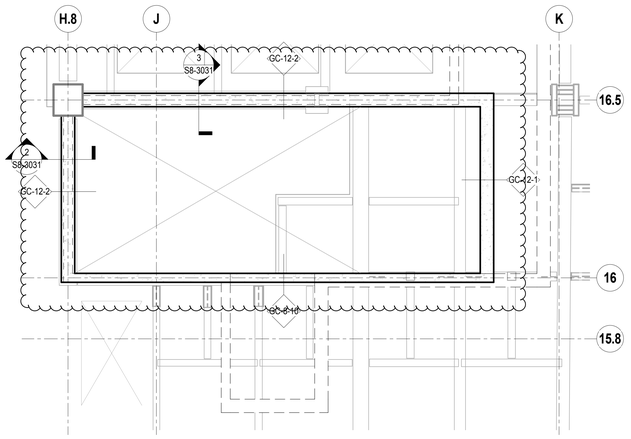

4 PART PLAN - STAIR D - LEVEL 02
1/4" = 1'-0"

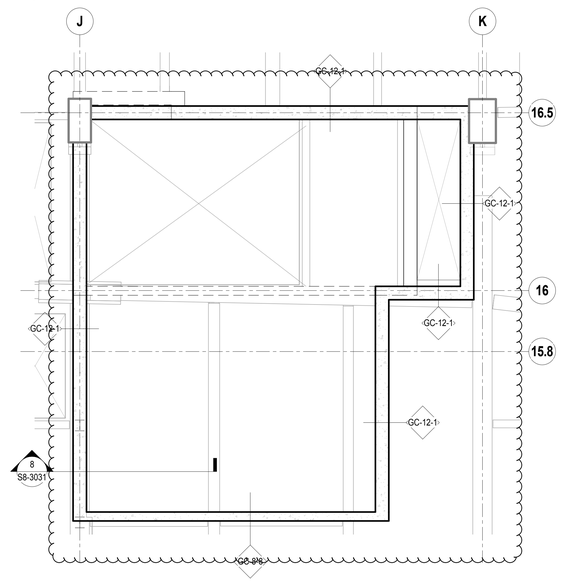

7 PART PLAN - STAIR D - LEVEL 05
1/4" = 1'-0"

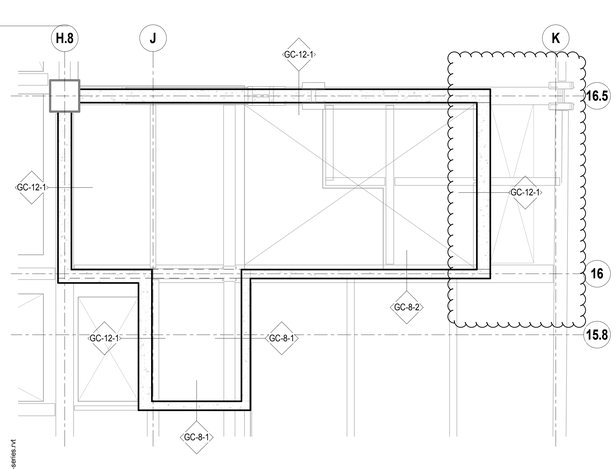

5 PART PLAN - STAIR D - LEVEL 03
1/4" = 1'-0"

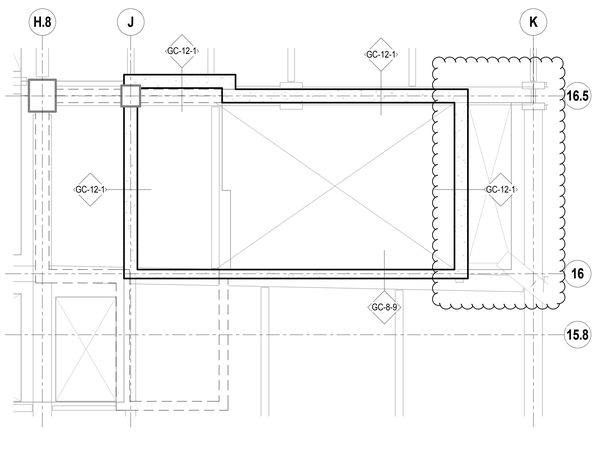

6 PART PLAN - STAIR D - LEVEL 04
1/4" = 1'-0"

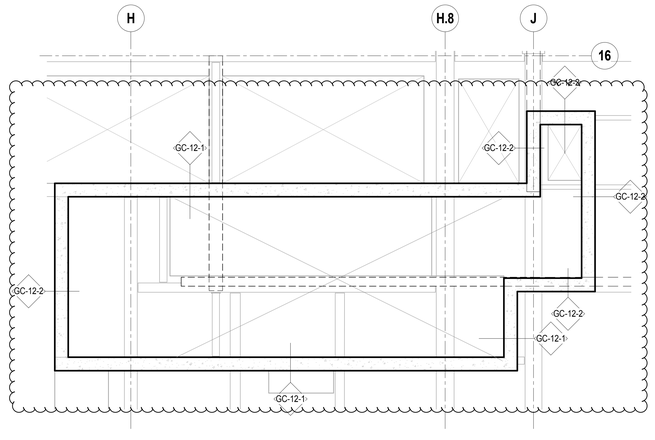

8 PART PLAN - STAIR D - LEVEL 06
1/4" = 1'-0"

SHEET NOTES:

1. S8 SERIES DRAWINGS IDENTIFY SPECIAL WALLS.
2. SEE ARCHITECTURAL DRAWINGS FOR ALL WALL LOCATIONS AND FINISHES. SPECIAL WALLS SHOWN HERE MAY NOT REFLECT THE FULL WALL THICKNESS OR MAKE-UP AND ARE INTENDED TO CONVEY THE STRUCTURAL PROPERTIES ONLY. WALL PENETRATIONS FOR DOORWAYS / MEP SERVICES ARE NOT SHOWN ON THE S8-SERIES DRAWINGS.
3. SEE S1 SERIES DRAWINGS FOR FLOOR FRAMING. FRAMING SHOWN IN GREY ON S8 SERIES DRAWINGS IS INCLUDED FOR REFERENCE ONLY.
4. SEE S4 SERIES DRAWINGS FOR TYPICAL MASONRY NON-BEARING WALL DETAILS.
5. SEE S4 SERIES DRAWINGS FOR TYPICAL COMPOSITE DECK DETAILS NOT SHOWN OR INDICATED ON THE S8 SERIES DRAWINGS.
6. TYPICAL DETAILS ARE PROVIDED FOR SPECIAL WALL OPENINGS. ALL OPENINGS THAT DO NOT FALL WITHIN PARAMETERS OF THE TYPICAL DETAILS MUST BE APPROVED BY THE STRUCTURAL ENGINEER.
7. CORNERS AND INTERSECTIONS OF SPECIAL CONCRETE WALLS SHALL HAVE A BOND BREAK UON. SEE DETAIL 8/S8-2002 FOR TYPICAL BOND BREAK DETAILS.
8. CONCRETE STRENGTH OF SPECIAL WALLS SHALL MEET THE FOLLOWING 28-DAY COMPRESSIVE STRENGTHS (f'c), UON:
   - CONCRETE WALLS: 5,000 PSI
   - STEEL PLATE WALLS: 5,000 PSI
9. STEEL AND CONNECTION MATERIALS FOR SPECIAL WALLS SHALL CONFORM TO THE MINIMUM REQUIREMENTS AS INDICATED IN THE STRUCTURAL GENERAL NOTES EXCEPT AS FOLLOWS:
   - ANGLES: ASTM A572, MINIMUM YIELD STRENGTH 50 KSI
   - STEEL WALL PLATES: ASTM A572, MINIMUM YIELD STRENGTH 50 KSI
   - COLD-FORMED STUDS: MINIMUM YIELD STRENGTH 50 KSI
10. THE FOLLOWING NOMENCLATURE AND TABLES ARE USED TO IDENTIFY THE STRUCTURAL MAKE-UP OF THE SPECIAL WALLS:

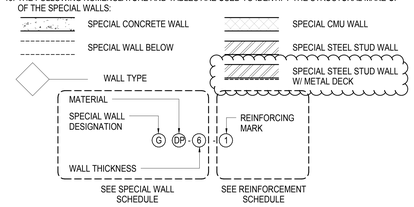

11. SEE S8-2001 AND S8-2002 FOR TYPICAL CONNECTION DETAILS FOR SPECIAL CONCRETE WALLS.
12. SEE S8-2003 FOR TYPICAL CONNECTION DETAILS FOR SPECIAL MASONRY WALLS.
13. SEE S8-2005 FOR TYPICAL CONNECTION DETAILS FOR STEEL SANDWICH PLATE WALLS.
14. SEE S8-2006 FOR TYPICAL CONNECTION DETAILS FOR SPECIAL COLD FORMED STEEL STUD WALLS.

SPECIAL WALL SCHEDULE

WALL ID	WALL THICKNESS (IN)	WALL MATERIAL	COMMENTS
GC-24	24	CONCRETE	
GC-20	20	CONCRETE	
GC-16	16	CONCRETE	
GC-12	12	CONCRETE	
GC-8	8	CONCRETE	
GC-7.5	7 1/2	CONCRETE	
GM-8	8	CMU	16" BLOCK LENGTH, TYP 18" BLOCK LENGTH, ALT.
GSP-8.5	8 1/2	STEEL SANDWICH PLATE	8" CONC CORE W/ (1) 1/2" THICK STL PLATE
GDP-8.75	8 3/4	STEEL SANDWICH PLATE	7" CONC CORE BETWEEN (2) 7/8" THICK STL PLATES
GDP-6	6	STEEL SANDWICH PLATE	5" CONC CORE BETWEEN (2) 1/2" THICK STL PLATES
GD-16	16	COLD-FORMED STEEL STUD W/ 1 1/2" 20 GA METAL DECK	1600S300-97 STUDS @ 12" O.C. UON
GS-6	6	COLD-FORMED STEEL STUD W/ GWB	600S250-97 STUDS @ 16" O.C. UON

REINFORCEMENT SCHEDULE

MARK	VERT BARS BAR SIZE	VERT BARS BAR SPACING (IN)	HORIZ BARS* BAR SIZE	HORIZ BARS* BAR SPACING (IN)
1	6	12	6	12
2	6	8	6	12
3	6	6	6	12
4	6	4	6	12
5	5	24	5	24
6	5	16	5	16
7	5	12	5	12
8	5	8	5	12
9	5	6	5	12
10	5	4	5	12

* HORIZONTAL BAR CALL OUTS ARE SPECIFICALLY FOR SPECIAL CONCRETE WALLS. SPECIAL MASONRY WALLS TO HAVE STANDARD LADDER MESH JOINT REINFORCEMENT EVERY OTHER COURSE.

Damian Titus
Buildings
APPROVED
Under Directive 1 of 1975
MUNDIFICATIONS
Date: 05/03/2017
NYC Development Hub

0 4' 8' 16'

N

HUDSON YARDS - RETAIL PODIUM AND TOWER A

500 WEST 33RD STREET
New York, NY

Client
Related Companies
60 Columbus Circle
New York, NY 10023
TEL: 212.801.1000 FAX: 212.801.1048

Oxford Properties Group
320 Park Avenue, 17th Floor
New York, NY 10022
TEL: 212.986.7514 FAX: 212.986.7510

Architect
Kohn Pedersen Fox Associates
11 West 42nd Street
New York, New York 10036
TEL: 212.977.6500 FAX: 212.956.2526

Structural Engineer
Thornton Tomasetti, Inc.
51 Madison Avenue
New York, New York 10010
TEL: 917.661.7800 FAX: 718.661.7801

Mechanical, Electrical, Plumbing, Fire Protection
Jaros Baum & Bolles Consulting Engineers
80 Pine Street
New York, NY 10013
TEL: 212.530.9300 FAX: 212.269.5894

Retail Interior Design & Planning
Elkus-Manfredi
300 A Street
Boston, MA 02210
TEL: 617.426.1300

No.	Description	Date
2	D.O.B. AMENDMENT #2	10/15/2016
1	D.O.B. BUILDING PERMIT FILING	12/10/2014

Key Plan

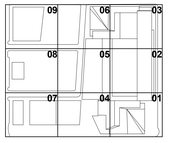

Issue Date: 12/10/2014
Project No. N11328.00
Drawn By Author
Sheet Number

HYE -TA -S8-1031

Drawing Title

STAIR D PART PLANS

Drawing Number
S8-1031
B-Scan Drawing Number
S-963.01

© 2013 KOHN PEDERSEN FOX ASSOCIATES PC. All rights reserved.

S8-1031 10/19/2016 10:47:19 AM STAIR D PART PLANS P:\NY\Projects\N11328.00\Drawings\Structural\Record\Issued\2016-10-16 - D.O.B. Amendment No.2\Revit - Rev. Removed\HYTA_S8-series.rvt

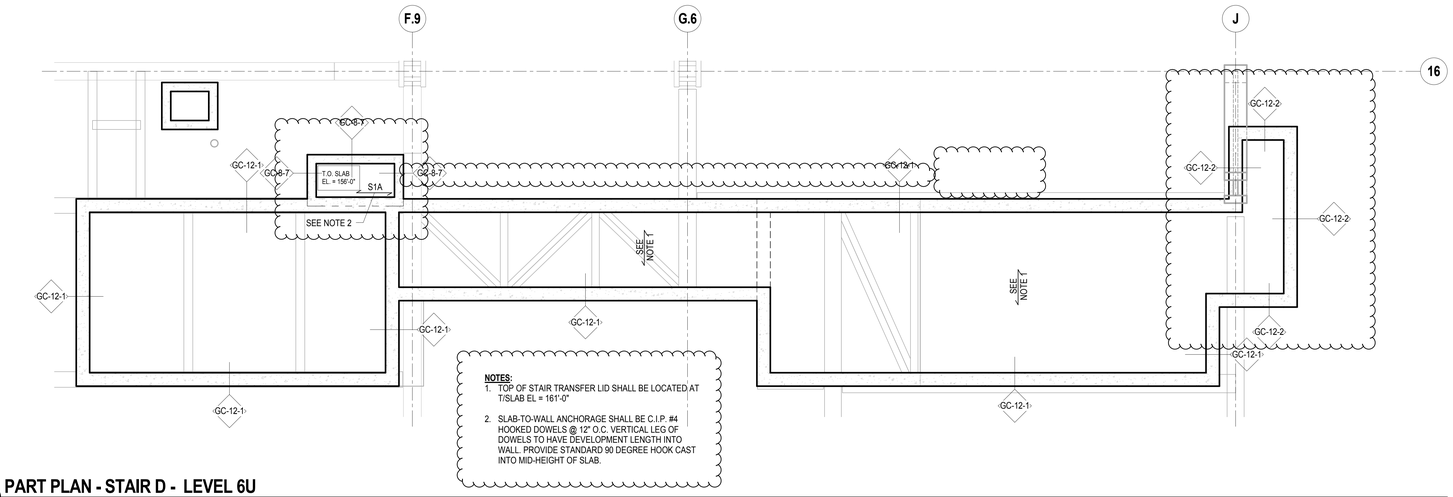

1 PART PLAN - STAIR D - LEVEL 6U
1/4" = 1'-0"

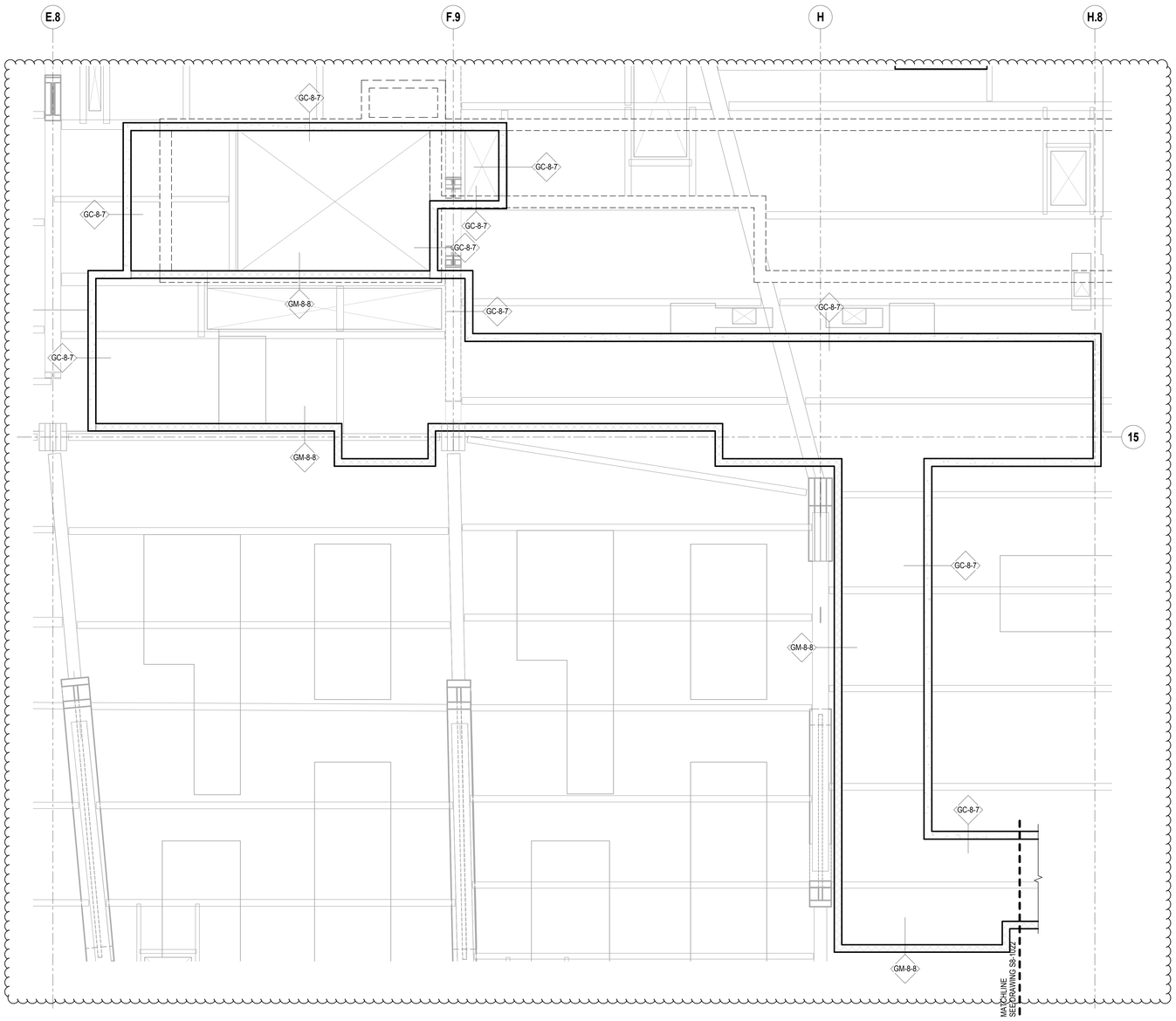

2 PART PLAN - STAIR D - LEVEL 08
1/4" = 1'-0"

SHEET NOTES:
1. S8 SERIES DRAWINGS IDENTIFY SPECIAL WALLS.
2. SEE ARCHITECTURAL DRAWINGS FOR ALL WALL LOCATIONS AND FINISHES. SPECIAL WALLS SHOWN HERE MAY NOT REFLECT THE FULL WALL THICKNESS OR MAKE-UP AND ARE INTENDED TO CONVEY THE STRUCTURAL PROPERTIES ONLY. WALL PENETRATIONS FOR DOORWAYS / MEP SERVICES ARE NOT SHOWN ON THE S8-SERIES DRAWINGS.
3. SEE S1 SERIES DRAWINGS FOR FLOOR FRAMING. FRAMING SHOWN IN GREY ON S8 SERIES DRAWINGS IS INCLUDED FOR REFERENCE ONLY.
4. SEE S4 SERIES DRAWINGS FOR TYPICAL MASONRY NON-BEARING WALL DETAILS.
5. SEE S4 SERIES DRAWINGS FOR TYPICAL COMPOSITE DECK DETAILS NOT SHOWN OR INDICATED ON THE S8 SERIES DRAWINGS.
6. TYPICAL DETAILS ARE PROVIDED FOR SPECIAL WALL OPENINGS. ALL OPENINGS THAT DO NOT FALL WITHIN PARAMETERS OF THE TYPICAL DETAILS MUST BE APPROVED BY THE STRUCTURAL ENGINEER.
7. CORNERS AND INTERSECTIONS OF SPECIAL CONCRETE WALLS SHALL HAVE A BOND BREAK UON. SEE DETAIL 8/S8-2002 FOR TYPICAL BOND BREAK DETAILS.
8. CONCRETE STRENGTH OF SPECIAL WALLS SHALL MEET THE FOLLOWING 28-DAY COMPRESSIVE STRENGTHS (f'c), UON:
   CONCRETE WALLS 5,000 PSI
   STEEL PLATE WALLS 5,000 PSI
9. STEEL AND CONNECTION MATERIALS FOR SPECIAL WALLS SHALL CONFORM TO THE MINIMUM REQUIREMENTS AS INDICATED IN THE STRUCTURAL GENERAL NOTES EXCEPT AS FOLLOWS:
   ANGLES: ASTM A572, MINIMUM YIELD STRENGTH 50 KSI
   STEEL WALL PLATES: ASTM A572, MINIMUM YIELD STRENGTH 50 KSI
   COLD-FORMED STUDS: MINIMUM YIELD STRENGTH 50 KSI
10. THE FOLLOWING NOMENCLATURE AND TABLES ARE USED TO IDENTIFY THE STRUCTURAL MAKE-UP OF THE SPECIAL WALLS:

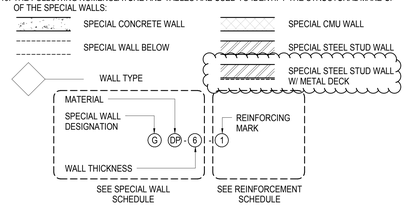

11. SEE S8-2001 AND S8-2002 FOR TYPICAL CONNECTION DETAILS FOR SPECIAL CONCRETE WALLS.
12. SEE S8-2003 FOR TYPICAL CONNECTION DETAILS FOR SPECIAL MASONRY WALLS.
13. SEE S8-2005 FOR TYPICAL CONNECTION DETAILS FOR STEEL SANDWICH PLATE WALLS.
14. SEE S8-2006 FOR TYPICAL CONNECTION DETAILS FOR SPECIAL COLD FORMED STEEL STUD WALLS.

SPECIAL WALL SCHEDULE

WALL ID	WALL THICKNESS (IN)	WALL MATERIAL	COMMENTS
GC-24	24	CONCRETE	
GC-20	20	CONCRETE	
GC-16	16	CONCRETE	
GC-12	12	CONCRETE	
GC-8	8	CONCRETE	
GC-7.5	7 1/2	CONCRETE	
GM-8	8	CMU	16" BLOCK LENGTH, TYP 18" BLOCK LENGTH, ALT.
GSP-8.5	8 1/2	STEEL SANDWICH PLATE	8" CONC CORE W/ (1) 1/2" THICK STL PLATE
GDP-8.75	8 3/4	STEEL SANDWICH PLATE	7" CONC CORE BETWEEN (2) 7/8" THICK STL PLATES
GDP-6	6	STEEL SANDWICH PLATE	5" CONC CORE BETWEEN (2) 1/2" THICK STL PLATES
GD-16	16	COLD-FORMED STEEL STUD W/ 1 1/2" 20 GA METAL DECK	1600S300-97 STUDS @ 12" O.C. UON
GS-6	6	COLD-FORMED STEEL STUD W/ GWB	600S250-97 STUDS @ 16" O.C. UON

REINFORCEMENT SCHEDULE

MARK	VERT BARS BAR SIZE	VERT BARS BAR SPACING (IN)	HORIZ BARS* BAR SIZE	HORIZ BARS* BAR SPACING (IN)
1	6	12	6	12
2	6	8	6	12
3	6	6	6	12
4	6	4	6	12
5	5	24	5	24
6	5	16	5	16
7	5	12	5	12
8	5	8	5	12
9	5	6	5	12
10	5	4	5	12

* HORIZONTAL BAR CALL OUTS ARE SPECIFICALLY FOR SPECIAL CONCRETE WALLS. SPECIAL MASONRY WALLS TO HAVE STANDARD LADDER MESH JOINT REINFORCEMENT EVERY OTHER COURSE.

Damian Titus
Buildings
APPROVED
Under Directive 2 of 1975
AMENDED APPLICATION
Date: 05/01/2017
NYC Development Hub

0 4' 8' 16'

N

HUDSON YARDS - RETAIL PODIUM AND TOWER A

500 WEST 33RD STREET
New York, NY

Client
Related Companies
60 Columbus Circle
New York, NY 10023
TEL: 212.801.1000 FAX: 212.801.1048

Oxford Properties Group
320 Park Avenue, 17th Floor
New York, NY 10022
TEL: 212.986.7514 FAX: 212.986.7510

Architect
Kohn Pedersen Fox Associates
11 West 42nd Street
New York, New York 10036
TEL: 212.977.6500 FAX: 212.956.2526

Structural Engineer
Thornton Tomasetti, Inc.
51 Madison Avenue
New York, New York 10010
TEL: 917.661.7800 FAX: 718.661.7801

Mechanical, Electrical, Plumbing, Fire Protection
Jaros Baum & Bolles Consulting Engineers
80 Pine Street
New York, NY 10013
TEL: 212.530.9300 FAX: 212.269.5894

Retail Interior Design & Planning
Elkus-Manfredi
300 A Street
Boston, MA 02210
TEL: 617.426.1300

No.	Description	Date
2	D.O.B. AMENDMENT #2	10/15/2016
1	D.O.B. BUILDING PERMIT FILING	12/10/2014

Key Plan

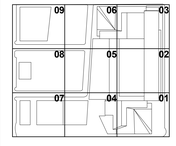

Issue Date: 12/10/2014
Project No. N11328.00
Drawn By: Author
Sheet Number

HYE -TA -S8-1032

Drawing Title

STAIR D PART PLANS

Drawing Number
S8-1032
B-Scan Drawing Number
S-964.01

© 2013 KOHN PEDERSEN FOX ASSOCIATES PC. All rights reserved.

S8-1032
10/19/2016 10:47:27 AM
S8-MR D PART PLANS
P:\NY\Projects\N11328.00\Drawings\Structural\Record\Issued\2016-10-19 - D.O.B. Amendment No.2\Revit - Rev. Removed\HYTA_S8-series.rvt

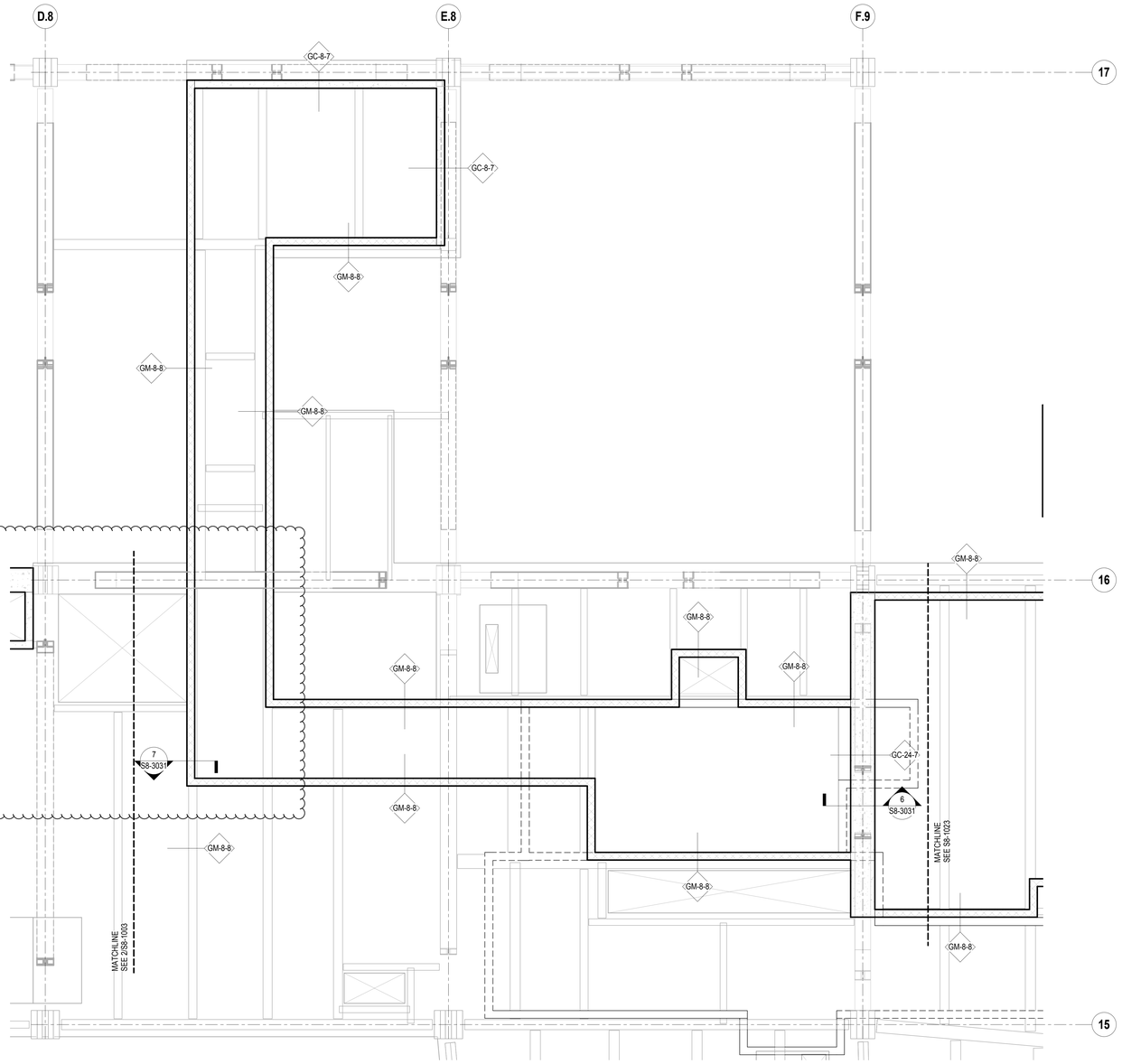

1 PART PLAN - STAIR D - LEVEL 09

1/4" = 1'-0"

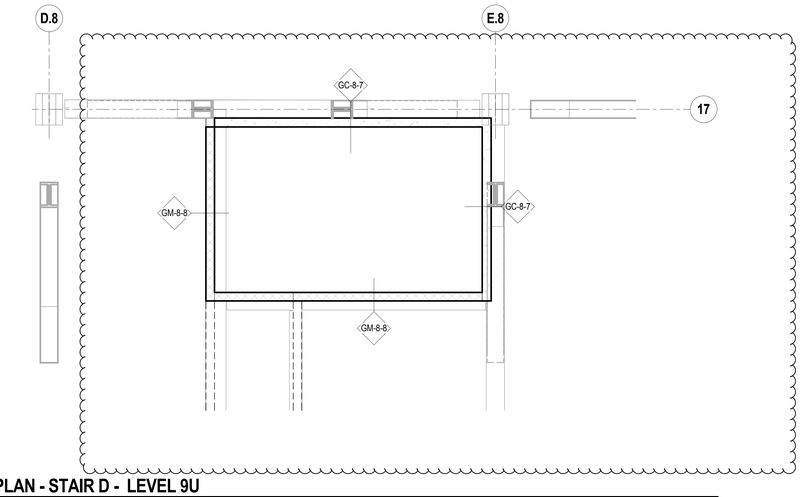

2 PART PLAN - STAIR D - LEVEL 9U

1/4" = 1'-0"

SHEET NOTES:

1. S8 SERIES DRAWINGS IDENTIFY SPECIAL WALLS.
2. SEE ARCHITECTURAL DRAWINGS FOR ALL WALL LOCATIONS AND FINISHES. SPECIAL WALLS SHOWN HERE MAY NOT REFLECT THE FULL WALL THICKNESS OR MAKE-UP AND ARE INTENDED TO CONVEY THE STRUCTURAL PROPERTIES ONLY. WALL PENETRATIONS FOR DOORWAYS / MEP SERVICES ARE NOT SHOWN ON THE S8-SERIES DRAWINGS.
3. SEE S1 SERIES DRAWINGS FOR FLOOR FRAMING. FRAMING SHOWN IN GREY ON S8 SERIES DRAWINGS IS INCLUDED FOR REFERENCE ONLY.
4. SEE S4 SERIES DRAWINGS FOR TYPICAL MASONRY NON-BEARING WALL DETAILS.
5. SEE S4 SERIES DRAWINGS FOR TYPICAL COMPOSITE DECK DETAILS NOT SHOWN OR INDICATED ON THE S8 SERIES DRAWINGS.
6. TYPICAL DETAILS ARE PROVIDED FOR SPECIAL WALL OPENINGS. ALL OPENINGS THAT DO NOT FALL WITHIN PARAMETERS OF THE TYPICAL DETAILS MUST BE APPROVED BY THE STRUCTURAL ENGINEER.
7. CORNERS AND INTERSECTIONS OF SPECIAL CONCRETE WALLS SHALL HAVE A BOND BREAK UON. SEE DETAIL 8/S8-2002 FOR TYPICAL BOND BREAK DETAILS.
8. CONCRETE STRENGTH OF SPECIAL WALLS SHALL MEET THE FOLLOWING 28-DAY COMPRESSIVE STRENGTHS (f'c), UON:
   CONCRETE WALLS 5,000 PSI
   STEEL PLATE WALLS 5,000 PSI
9. STEEL AND CONNECTION MATERIALS FOR SPECIAL WALLS SHALL CONFORM TO THE MINIMUM REQUIREMENTS AS INDICATED IN THE STRUCTURAL GENERAL NOTES EXCEPT AS FOLLOWS:
   ANGLES: ASTM A572, MINIMUM YIELD STRENGTH 50 KSI
   STEEL WALL PLATES: ASTM A572, MINIMUM YIELD STRENGTH 50 KSI
   COLD-FORMED STUDS: MINIMUM YIELD STRENGTH 50 KSI
10. THE FOLLOWING NOMENCLATURE AND TABLES ARE USED TO IDENTIFY THE STRUCTURAL MAKE-UP OF THE SPECIAL WALLS:

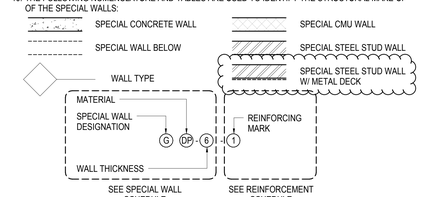

11. SEE S8-2001 AND S8-2002 FOR TYPICAL CONNECTION DETAILS FOR SPECIAL CONCRETE WALLS.
12. SEE S8-2003 FOR TYPICAL CONNECTION DETAILS FOR SPECIAL MASONRY WALLS.
13. SEE S8-2005 FOR TYPICAL CONNECTION DETAILS FOR STEEL SANDWICH PLATE WALLS.
14. SEE S8-2006 FOR TYPICAL CONNECTION DETAILS FOR SPECIAL COLD FORMED STEEL STUD WALLS.

SPECIAL WALL SCHEDULE

WALL ID	WALL THICKNESS (IN)	WALL MATERIAL	COMMENTS
GC-24	24	CONCRETE	
GC-20	20	CONCRETE	
GC-16	16	CONCRETE	
GC-12	12	CONCRETE	
GC-8	8	CONCRETE	
GC-7.5	7 1/2	CONCRETE	
GM-8	8	CMU	16" BLOCK LENGTH, TYP 18" BLOCK LENGTH, ALT.
GSP-8.5	8 1/2	STEEL SANDWICH PLATE	8" CONC CORE W/ (1) 1/2" THICK STL PLATE
GDP-8.75	8 3/4	STEEL SANDWICH PLATE	7" CONC CORE BETWEEN (2) 7/8" THICK STL PLATES
GDP-6	6	STEEL SANDWICH PLATE	5" CONC CORE BETWEEN (2) 1/2" THICK STL PLATES
GD-16	16	COLD-FORMED STEEL STUD W/ 1 1/2" 20 GA METAL DECK	1600S300-97 STUDS @ 12" O.C. UON
GS-6	6	COLD-FORMED STEEL STUD W/ GWB	600S250-97 STUDS @ 16" O.C. UON

REINFORCEMENT SCHEDULE

MARK	VERT BARS BAR SIZE	VERT BARS BAR SPACING (IN)	HORIZ BARS* BAR SIZE	HORIZ BARS* BAR SPACING (IN)
1	6	12	6	12
2	6	8	6	12
3	6	6	6	12
4	6	4	6	12
5	5	24	5	24
6	5	16	5	16
7	5	12	5	12
8	5	8	5	12
9	5	6	5	12
10	5	4	5	12

* HORIZONTAL BAR CALL OUTS ARE SPECIFICALLY FOR SPECIAL CONCRETE WALLS. SPECIAL MASONRY WALLS TO HAVE STANDARD LADDER MESH JOINT REINFORCEMENT EVERY OTHER COURSE.

Damian Titus
Buildings
APPROVED
Under Directive 2 of 1975
AMENDED APPLICATION
Date: 05/03/2017
NYC Development Hub

0 4' 8' 16'

N

HUDSON YARDS - RETAIL PODIUM AND TOWER A

500 WEST 33RD STREET
New York, NY

Client
Related Companies
60 Columbus Circle
New York, NY 10023
TEL: 212.801.1000 FAX: 212.801.1048

Oxford Properties Group
320 Park Avenue, 17th Floor
New York, NY 10022
TEL: 212.986.7514 FAX: 212.986.7510

Architect
Kohn Pedersen Fox Associates
11 West 42nd Street
New York, New York 10036
TEL: 212.977.6500 FAX: 212.956.2526

Structural Engineer
Thornton Tomasetti, Inc.
51 Madison Avenue
New York, New York 10010
TEL: 917.661.7800 FAX: 718.661.7801

Mechanical, Electrical, Plumbing, Fire Protection
Jaros Baum & Bolles Consulting Engineers
80 Pine Street
New York, NY 10013
TEL: 212.530.9300 FAX: 212.269.5894

Retail Interior Design & Planning
Elkus-Manfredi
300 A Street
Boston, MA 02210
TEL: 617.426.1300

No.	Description	Date
2	D.O.B. AMENDMENT #2	10/15/2016
1	D.O.B. BUILDING PERMIT FILING	12/10/2014

Key Plan

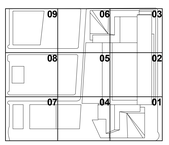

Issue Date: 12/10/2014
Project No. N11328.00
Drawn By Author
Sheet Number

HYE -TA -S8-1033

Drawing Title

STAIR D PART PLANS

Drawing Number
S8-1033
B-Size Drawing Number
S-965.01

© 2013 KOHN PEDERSEN FOX ASSOCIATES PC. All rights reserved.

S8-1033 STAIR D PART PLANS
10/10/2016 10:47:38 AM P:\NY\Projects\N11328.00\Drawings\Structural\Record\Issued\2016-10-16 - D.O.B. Amendment No.2\Revit - Rev. Removed\HYTA_S8-series.rvt

DEPT OF BLDGS 421490825 Job Number
E5809657935 Scan Code

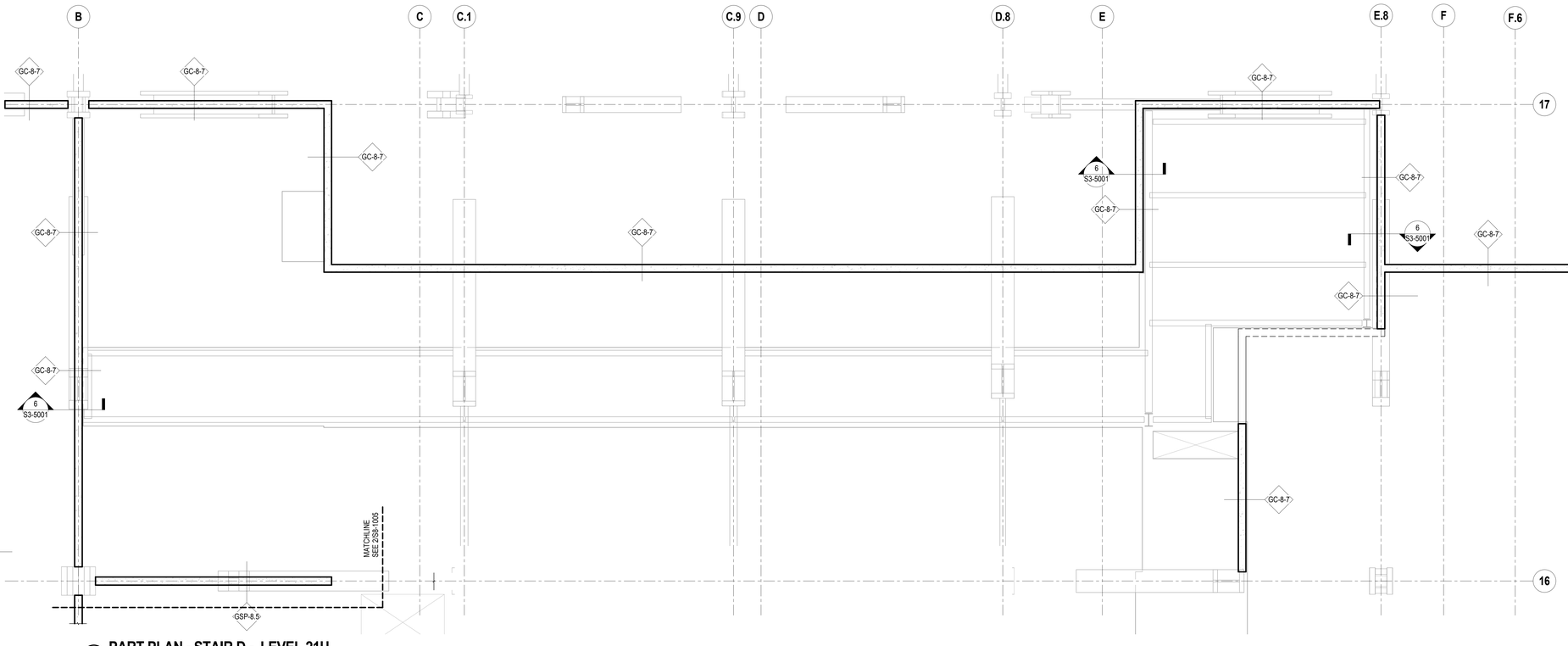

2 PART PLAN - STAIR D - LEVEL 21U
1/4" = 1'-0"

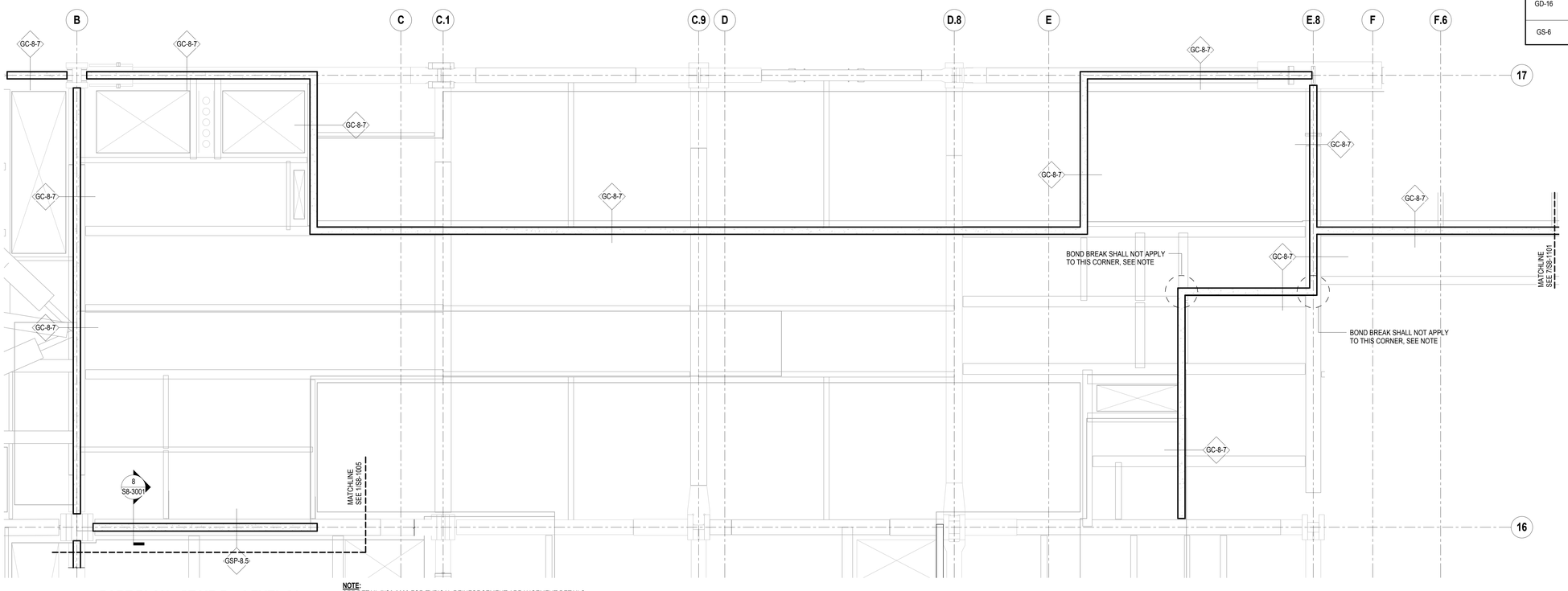

1 PART PLAN - STAIR D - LEVEL 21
1/4" = 1'-0"

NOTE:
SEE DETAIL 7/S8-2002 FOR TYPICAL REINFORCEMENT ARRANGEMENT DETAILS WHEN BOND BREAKS ARE NOT APPLICABLE.

SHEET NOTES:

1. S8 SERIES DRAWINGS IDENTIFY SPECIAL WALLS.
2. SEE ARCHITECTURAL DRAWINGS FOR ALL WALL LOCATIONS AND FINISHES. SPECIAL WALLS SHOWN HERE MAY NOT REFLECT THE FULL WALL THICKNESS OR MAKE-UP AND ARE INTENDED TO CONVEY THE STRUCTURAL PROPERTIES ONLY. WALL PENETRATIONS FOR DOORWAYS / MEP SERVICES ARE NOT SHOWN ON THE S8-SERIES DRAWINGS.
3. SEE S1 SERIES DRAWINGS FOR FLOOR FRAMING. FRAMING SHOWN IN GREY ON S8 SERIES DRAWINGS IS INCLUDED FOR REFERENCE ONLY.
4. SEE S4 SERIES DRAWINGS FOR TYPICAL MASONRY NON-BEARING WALL DETAILS.
5. SEE S4 SERIES DRAWINGS FOR TYPICAL COMPOSITE DECK DETAILS NOT SHOWN OR INDICATED ON THE S8 SERIES DRAWINGS.
6. TYPICAL DETAILS ARE PROVIDED FOR SPECIAL WALL OPENINGS. ALL OPENINGS THAT DO NOT FALL WITHIN PARAMETERS OF THE TYPICAL DETAILS MUST BE APPROVED BY THE STRUCTURAL ENGINEER.
7. CORNERS AND INTERSECTIONS OF SPECIAL CONCRETE WALLS SHALL HAVE A BOND BREAK UON. SEE DETAIL 8/S8-2002 FOR TYPICAL BOND BREAK DETAILS.
8. CONCRETE STRENGTH OF SPECIAL WALLS SHALL MEET THE FOLLOWING 28-DAY COMPRESSIVE STRENGTHS (f'c), UON:
   - CONCRETE WALLS 5,000 PSI
   - STEEL PLATE WALLS 5,000 PSI
9. STEEL AND CONNECTION MATERIALS FOR SPECIAL WALLS SHALL CONFORM TO THE MINIMUM REQUIREMENTS AS INDICATED IN THE STRUCTURAL GENERAL NOTES EXCEPT AS FOLLOWS:
   - ANGLES: ASTM A572, MINIMUM YIELD STRENGTH 50 KSI
   - STEEL WALL PLATES: ASTM A572, MINIMUM YIELD STRENGTH 50 KSI
   - COLD-FORMED STUDS: MINIMUM YIELD STRENGTH 50 KSI
10. THE FOLLOWING NOMENCLATURE AND TABLES ARE USED TO IDENTIFY THE STRUCTURAL MAKE-UP OF THE SPECIAL WALLS:

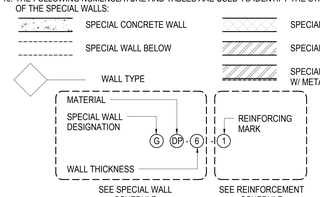

11. SEE S8-2001 AND S8-2002 FOR TYPICAL CONNECTION DETAILS FOR SPECIAL CONCRETE WALLS.
12. SEE S8-2003 FOR TYPICAL CONNECTION DETAILS FOR SPECIAL MASONRY WALLS.
13. SEE S8-2005 FOR TYPICAL CONNECTION DETAILS FOR STEEL SANDWICH PLATE WALLS.
14. SEE S8-2006 FOR TYPICAL CONNECTION DETAILS FOR SPECIAL COLD FORMED STEEL STUD WALLS.

SPECIAL WALL SCHEDULE

WALL ID	WALL THICKNESS (IN)	WALL MATERIAL	COMMENTS
GC-24	24	CONCRETE	
GC-20	20	CONCRETE	
GC-16	16	CONCRETE	
GC-12	12	CONCRETE	
GC-8	8	CONCRETE	
GC-7.5	7 1/2	CONCRETE	
GM-8	8	CMU	16" BLOCK LENGTH, TYP 18" BLOCK LENGTH, ALT
GSP-8.5	8 1/2	STEEL SANDWICH PLATE	8" CONC CORE W/ (1) 1/2" THICK STL PLATE
GDP-8.75	8 3/4	STEEL SANDWICH PLATE	7" CONC CORE BETWEEN (2) 7/8" THICK STL PLATES
GDP-6	6	STEEL SANDWICH PLATE	5" CONC CORE BETWEEN (2) 1/2" THICK STL PLATES
GD-16	16	COLD-FORMED STEEL STUD W/ 1 1/2" 20 GA METAL DECK	1600S300-97 STUDS @ 12" O.C. UON
GS-6	6	COLD-FORMED STEEL STUD W/ GWB	600S250-97 STUDS @ 16" O.C. UON

REINFORCEMENT SCHEDULE

MARK	VERT BARS		HORIZ BARS*	
	BAR SIZE	BAR SPACING (IN)	BAR SIZE	BAR SPACING (IN)
1	6	12	6	12
2	6	8	6	12
3	6	6	6	12
4	6	4	6	12
5	5	24	5	24
6	5	16	5	16
7	5	12	5	12
8	5	8	5	12
9	5	6	5	12
10	5	4	5	12

* HORIZONTAL BAR CALL OUTS ARE SPECIFICALLY FOR SPECIAL CONCRETE WALLS. SPECIAL MASONRY WALLS TO HAVE STANDARD LADDER MESH JOINT REINFORCEMENT EVERY OTHER COURSE.

HUDSON YARDS - RETAIL PODIUM AND TOWER A

500 WEST 33RD STREET
New York, NY

Client
Related Companies
60 Columbus Circle
New York, NY 10023
TEL: 212.801.1000 FAX: 212.801.1048

Oxford Properties Group
320 Park Avenue, 17th Floor
New York, NY 10022
TEL: 212.986.7514 FAX: 212.986.7510

Architect
Kohn Pedersen Fox Associates
11 West 42nd Street
New York, New York 10036
TEL: 212.977.6500 FAX: 212.956.2526

Structural Engineer
Thornton Tomasetti, Inc.
51 Madison Avenue
New York, New York 10010
TEL: 917.661.7800 FAX: 718.661.7801

Mechanical, Electrical, Plumbing, Fire Protection
Jaros Baum & Bolles Consulting Engineers
80 Pine Street
New York, NY 10013
TEL: 212.530.9300 FAX: 212.269.5894

Retail Interior Design & Planning
Elkus-Manfredi
300 A Street
Boston, MA 02210
TEL: 617.426.1300

No.	Description	Date
1	D.O.B. AMENDMENT #2	10/15/2016

Key Plan

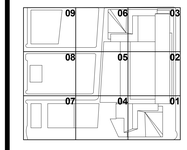

Issue Date: 10/15/2016
Project No. N11328.00
Drawn By: Author
Sheet Number

HYE -TA -S8-1034

Drawing Title

STAIR D PART PLANS

Drawing Number
S8-1034
B-Scan Drawing Number
S-966.00

SHEET 416 OF 443

Damian Titus
APPROVED
Under Directive 2 of 1975
AMENDED APPLICATION
Date: 05/03/2017
NYC Development Hub

0 4' 8' 16'

N

© 2013 KOHN PEDERSEN FOX ASSOCIATES PC. All rights reserved.

S8-1034
10/19/2016 10:47:59 AM
P:\NY\Projects\N11328.00\Drawings\Structural\Record\Issued\2016-10-16 - D.O.B. Amendment No.2\Revit - Rev. Removed\HYTA_S8-series.rvt

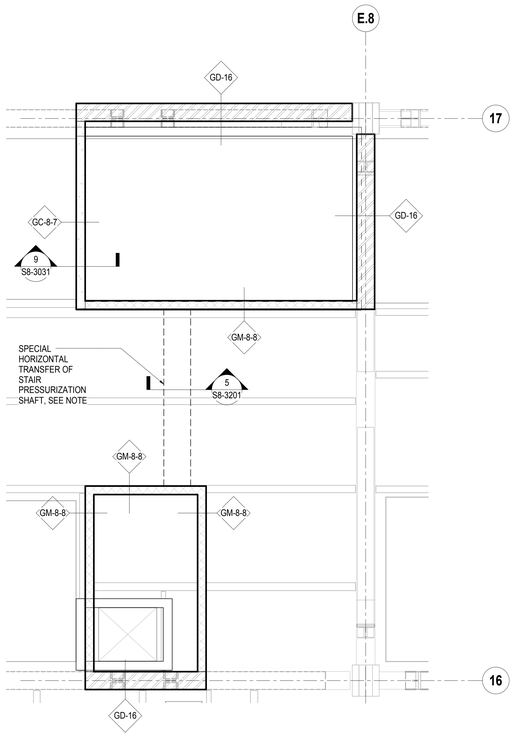

NOTE: THERE IS A SPECIAL HORIZONTAL TRANSFER OF STAIR PRESSURIZATION SHAFT ATTACHED TO THE FRAMING OF THE LEVEL ABOVE. SEE MECHANICAL DWGS FOR LAYOUTS OF HORIZONTAL TRANSFERS.

1 PART PLAN - STAIR D - TYPICAL LEVEL 10
1/4" = 1'-0"

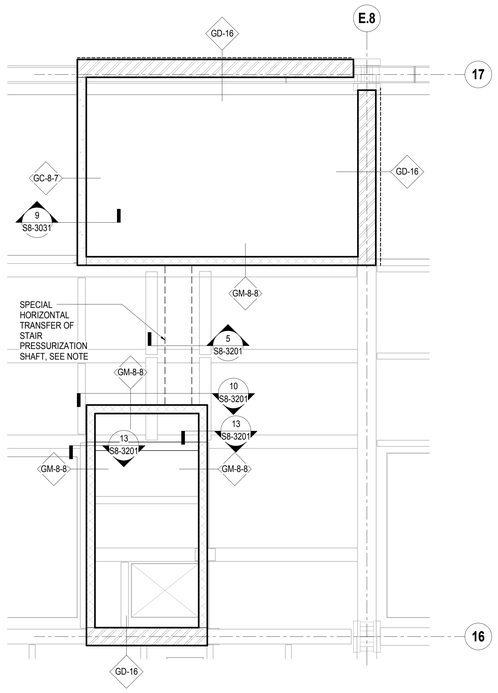

NOTE: THERE IS A SPECIAL HORIZONTAL TRANSFER OF STAIR PRESSURIZATION SHAFT ATTACHED TO THE FRAMING OF THE LEVEL ABOVE. SEE MECHANICAL DWGS FOR LAYOUTS OF HORIZONTAL TRANSFERS.

2 PART PLAN - STAIR D - TYPICAL LEVEL 11
1/4" = 1'-0"

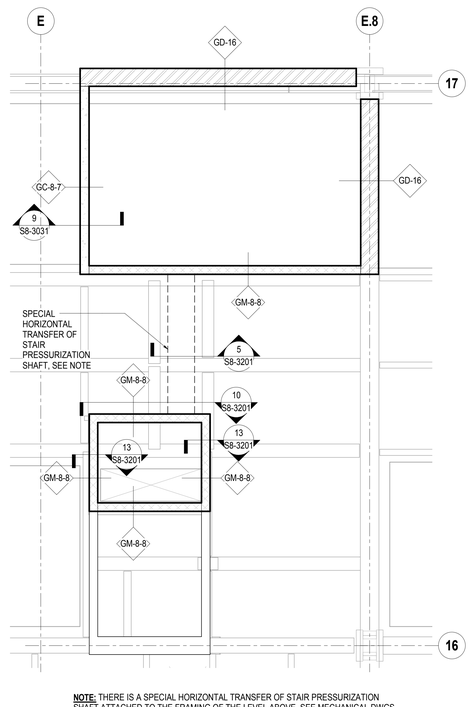

NOTE: THERE IS A SPECIAL HORIZONTAL TRANSFER OF STAIR PRESSURIZATION SHAFT ATTACHED TO THE FRAMING OF THE LEVEL ABOVE. SEE MECHANICAL DWGS FOR LAYOUTS OF HORIZONTAL TRANSFERS.

3 PART PLAN - STAIR D - TYPICAL LEVELS 12, 15, 17, 19
1/4" = 1'-0"

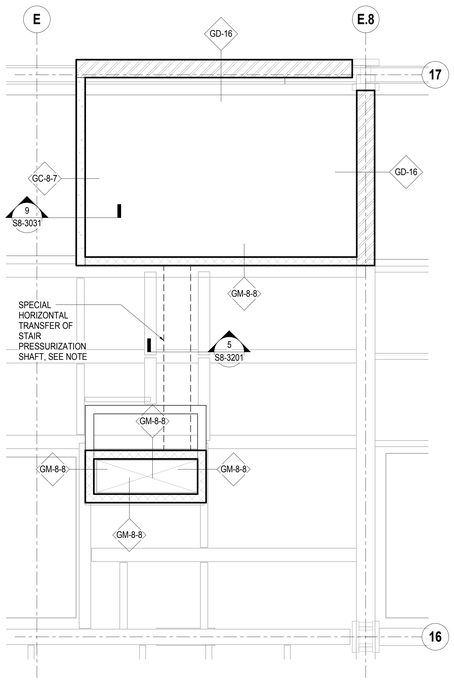

NOTE: THERE IS A SPECIAL HORIZONTAL TRANSFER OF STAIR PRESSURIZATION SHAFT ATTACHED TO THE FRAMING OF THE LEVEL ABOVE. SEE MECHANICAL DWGS FOR LAYOUTS OF HORIZONTAL TRANSFERS.

4 PART PLAN - STAIR D - TYPICAL LEVEL 13, 14, 16, 18, 20
1/4" = 1'-0"

SHEET NOTES:

1. S8 SERIES DRAWINGS IDENTIFY SPECIAL WALLS.
2. SEE ARCHITECTURAL DRAWINGS FOR ALL WALL LOCATIONS AND FINISHES. SPECIAL WALLS SHOWN HERE MAY NOT REFLECT THE FULL WALL THICKNESS OR MAKE-UP AND ARE INTENDED TO CONVEY THE STRUCTURAL PROPERTIES ONLY. WALL PENETRATIONS FOR DOORWAYS / MEP SERVICES ARE NOT SHOWN ON THE S8-SERIES DRAWINGS.
3. SEE S1 SERIES DRAWINGS FOR FLOOR FRAMING. FRAMING SHOWN IN GREY ON S8 SERIES DRAWINGS IS INCLUDED FOR REFERENCE ONLY.
4. SEE S4 SERIES DRAWINGS FOR TYPICAL MASONRY NON-BEARING WALL DETAILS.
5. SEE S4 SERIES DRAWINGS FOR TYPICAL COMPOSITE DECK DETAILS NOT SHOWN OR INDICATED ON THE S8 SERIES DRAWINGS.
6. TYPICAL DETAILS ARE PROVIDED FOR SPECIAL WALL OPENINGS. ALL OPENINGS THAT DO NOT FALL WITHIN PARAMETERS OF THE TYPICAL DETAILS MUST BE APPROVED BY THE STRUCTURAL ENGINEER.
7. CORNERS AND INTERSECTIONS OF SPECIAL CONCRETE WALLS SHALL HAVE A BOND BREAK UON. SEE DETAIL 8/S8-2002 FOR TYPICAL BOND BREAK DETAILS.
8. CONCRETE STRENGTH OF SPECIAL WALLS SHALL MEET THE FOLLOWING 28-DAY COMPRESSIVE STRENGTHS (f'c), UON:
   - CONCRETE WALLS 5,000 PSI
   - STEEL PLATE WALLS 5,000 PSI
9. STEEL AND CONNECTION MATERIALS FOR SPECIAL WALLS SHALL CONFORM TO THE MINIMUM REQUIREMENTS AS INDICATED IN THE STRUCTURAL GENERAL NOTES EXCEPT AS FOLLOWS:
   - ANGLES: ASTM A572, MINIMUM YIELD STRENGTH 50 KSI
   - STEEL WALL PLATES: ASTM A572, MINIMUM YIELD STRENGTH 50 KSI
   - COLD-FORMED STUDS: MINIMUM YIELD STRENGTH 50 KSI
10. THE FOLLOWING NOMENCLATURE AND TABLES ARE USED TO IDENTIFY THE STRUCTURAL MAKE-UP OF THE SPECIAL WALLS:

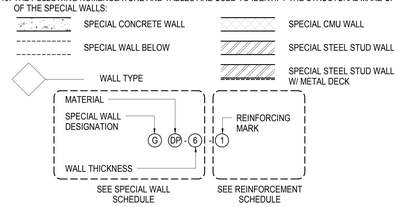

11. SEE S8-2001 AND S8-2002 FOR TYPICAL CONNECTION DETAILS FOR SPECIAL CONCRETE WALLS.
12. SEE S8-2003 FOR TYPICAL CONNECTION DETAILS FOR SPECIAL MASONRY WALLS.
13. SEE S8-2005 FOR TYPICAL CONNECTION DETAILS FOR STEEL SANDWICH PLATE WALLS.
14. SEE S8-2006 FOR TYPICAL CONNECTION DETAILS FOR SPECIAL COLD FORMED STEEL STUD WALLS.

SPECIAL WALL SCHEDULE

WALL ID	WALL THICKNESS (IN)	WALL MATERIAL	COMMENTS
GC-24	24	CONCRETE	
GC-20	20	CONCRETE	
GC-16	16	CONCRETE	
GC-12	12	CONCRETE	
GC-8	8	CONCRETE	
GC-7.5	7 1/2	CONCRETE	
GM-8	8	CMU	16" BLOCK LENGTH, TYP 18" BLOCK LENGTH, ALT
GSP-8.5	8 1/2	STEEL SANDWICH PLATE	8" CONC CORE W/ (1) 1/2" THICK STL PLATE
GDP-8.75	8 3/4	STEEL SANDWICH PLATE	7" CONC CORE BETWEEN (2) 7/8" THICK STL PLATES
GDP-6	6	STEEL SANDWICH PLATE	5" CONC CORE BETWEEN (2) 1/2" THICK STL PLATES
GD-16	16	COLD-FORMED STEEL STUD W/ 1 1/2" 20 GA METAL DECK	1600S300-97 STUDS @ 12" O.C. UON
GS-6	6	COLD-FORMED STEEL STUD W/ GWB	600S250-97 STUDS @ 16" O.C. UON

REINFORCEMENT SCHEDULE

MARK	VERT BARS BAR SIZE	VERT BARS BAR SPACING (IN)	HORIZ BARS* BAR SIZE	HORIZ BARS* BAR SPACING (IN)
1	6	12	6	12
2	6	8	6	12
3	6	6	6	12
4	6	4	6	12
5	5	24	5	24
6	5	16	5	16
7	5	12	5	12
8	5	8	5	12
9	5	6	5	12
10	5	4	5	12

* HORIZONTAL BAR CALL OUTS ARE SPECIFICALLY FOR SPECIAL CONCRETE WALLS. SPECIAL MASONRY WALLS TO HAVE STANDARD LADDER MESH JOINT REINFORCEMENT EVERY OTHER COURSE.

Damian Titus
Buildings
APPROVED
Under Directive 2 of 1975
AMENDED APPLICATION
Date: 05/03/2017
NYC Development Hub

0 4' 8' 16'

N

HUDSON YARDS - RETAIL PODIUM AND TOWER A

500 WEST 33RD STREET
New York, NY

Client
Related Companies
60 Columbus Circle
New York, NY 10023
TEL: 212.801.1000 FAX: 212.801.1048

Oxford Properties Group
320 Park Avenue, 17th Floor
New York, NY 10022
TEL: 212.986.7514 FAX: 212.986.7510

Architect
Kohn Pedersen Fox Associates
11 West 42nd Street
New York, New York 10036
TEL: 212.977.6500 FAX: 212.956.2526

Structural Engineer
Thornton Tomasetti, Inc.
51 Madison Avenue
New York, New York 10010
TEL: 917.661.7800 FAX: 718.661.7801

Mechanical, Electrical, Plumbing, Fire Protection
Jaros Baum & Bolles Consulting Engineers
80 Pine Street
New York, NY 10013
TEL: 212.530.9300 FAX: 212.269.5894

Retail Interior Design & Planning
Elkus-Manfredi
300 A Street
Boston, MA 02210
TEL: 617.426.1300

No.	Description	Date
1	D.O.B. AMENDMENT #2	10/15/2016

Key Plan

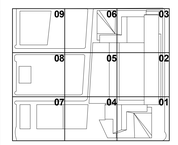

Issue Date: 10/15/2016
Project No. N11328.00
Drawn By: Author
Sheet Number

HYE -TA -S8-1033A

Drawing Title

STAIR D PART PLANS

Drawing Number
S8-1033A
B-Scan Drawing Number
S-967.00

© 2013 KOHN PEDERSEN FOX ASSOCIATES PC All rights reserved.

S8-1033A
10/19/2016 10:47:50 AM
P:\NY\17Projects\N11328.00\Drawings\Structural\Record\Issued\2016-10-15 - D.O.B. Amendment No.2\Revit - Rev. Removed\HYTA_S8-series.rvt

SKIDT OF BLOCK#1328#00 Job Number
ESLAN0279K Scan Code

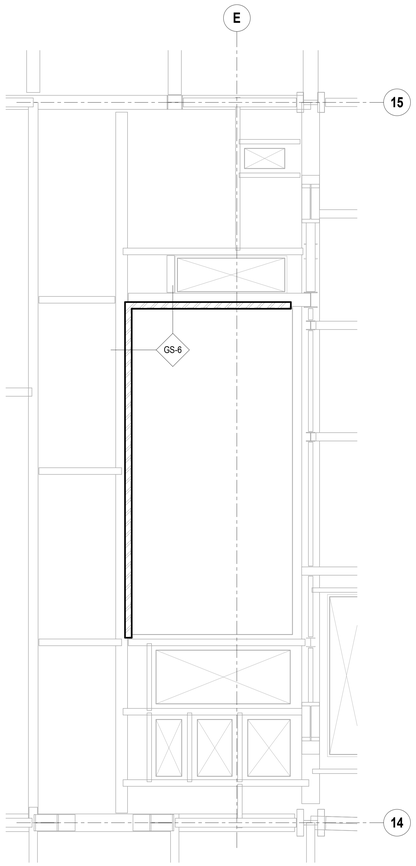

1 PART PLAN - STAIR C - TYPICAL LEVELS 55 - 59
1/4" = 1'-0"

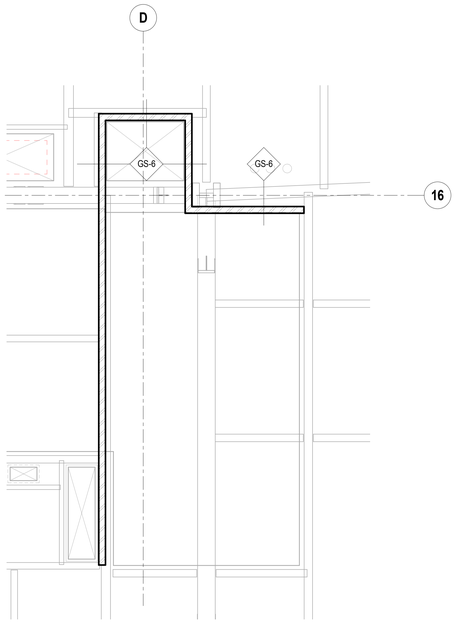

2 PART PLAN - STAIR C - TYPICAL LEVELS 61 AND 62- 64
1/4" = 1'-0"

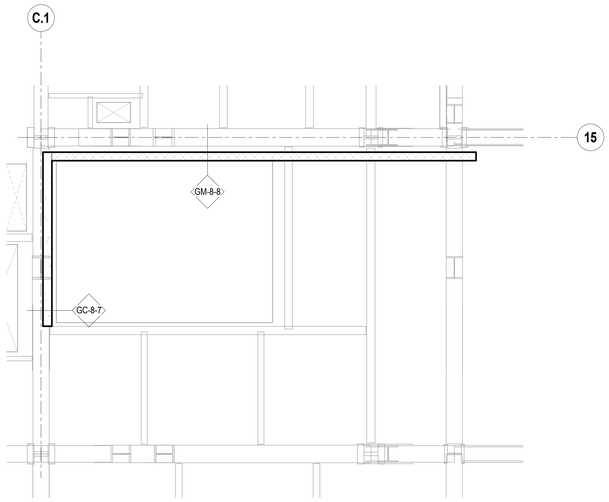

3 PART PLAN - STAIR C - LEVEL 66M
1/4" = 1'-0"

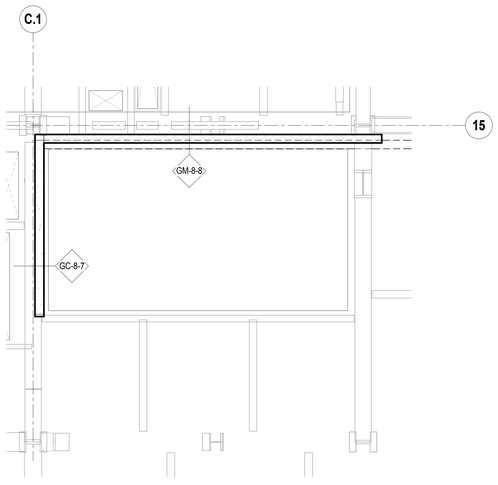

4 PART PLAN - STAIR C - TYPICAL LEVEL 67
1/4" = 1'-0"

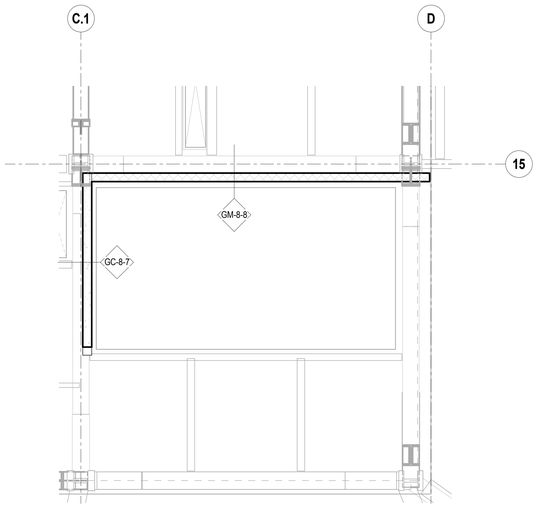

5 PART PLAN - STAIR C - LEVEL 68
1/4" = 1'-0"

SHEET NOTES:

1. S8 SERIES DRAWINGS IDENTIFY SPECIAL WALLS.
2. SEE ARCHITECTURAL DRAWINGS FOR ALL WALL LOCATIONS AND FINISHES. SPECIAL WALLS SHOWN HERE MAY NOT REFLECT THE FULL WALL THICKNESS OR MAKE-UP AND ARE INTENDED TO CONVEY THE STRUCTURAL PROPERTIES ONLY. WALL PENETRATIONS FOR DOORWAYS / MEP SERVICES ARE NOT SHOWN ON THE S8-SERIES DRAWINGS.
3. SEE S1 SERIES DRAWINGS FOR FLOOR FRAMING. FRAMING SHOWN IN GREY ON S8 SERIES DRAWINGS IS INCLUDED FOR REFERENCE ONLY.
4. SEE S4 SERIES DRAWINGS FOR TYPICAL MASONRY NON-BEARING WALL DETAILS.
5. SEE S4 SERIES DRAWINGS FOR TYPICAL COMPOSITE DECK DETAILS NOT SHOWN OR INDICATED ON THE S8 SERIES DRAWINGS.
6. TYPICAL DETAILS ARE PROVIDED FOR SPECIAL WALL OPENINGS. ALL OPENINGS THAT DO NOT FALL WITHIN PARAMETERS OF THE TYPICAL DETAILS MUST BE APPROVED BY THE STRUCTURAL ENGINEER.
7. CORNERS AND INTERSECTIONS OF SPECIAL CONCRETE WALLS SHALL HAVE A BOND BREAK UON. SEE DETAIL 8/S8-2002 FOR TYPICAL BOND BREAK DETAILS.
8. CONCRETE STRENGTH OF SPECIAL WALLS SHALL MEET THE FOLLOWING 28-DAY COMPRESSIVE STRENGTHS (f'c), UON:
   CONCRETE WALLS 5,000 PSI
   STEEL PLATE WALLS 5,000 PSI
9. STEEL AND CONNECTION MATERIALS FOR SPECIAL WALLS SHALL CONFORM TO THE MINIMUM REQUIREMENTS AS INDICATED IN THE STRUCTURAL GENERAL NOTES EXCEPT AS FOLLOWS:
   ANGLES: ASTM A572, MINIMUM YIELD STRENGTH 50 KSI
   STEEL WALL PLATES: ASTM A572, MINIMUM YIELD STRENGTH 50 KSI
   COLD-FORMED STUDS: MINIMUM YIELD STRENGTH 50 KSI
10. THE FOLLOWING NOMENCLATURE AND TABLES ARE USED TO IDENTIFY THE STRUCTURAL MAKE-UP OF THE SPECIAL WALLS:

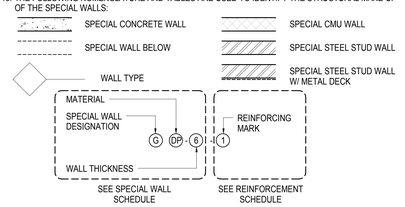

11. SEE S8-2001 AND S8-2002 FOR TYPICAL CONNECTION DETAILS FOR SPECIAL CONCRETE WALLS.
12. SEE S8-2003 FOR TYPICAL CONNECTION DETAILS FOR SPECIAL MASONRY WALLS.
13. SEE S8-2005 FOR TYPICAL CONNECTION DETAILS FOR STEEL SANDWICH PLATE WALLS.
14. SEE S8-2006 FOR TYPICAL CONNECTION DETAILS FOR SPECIAL COLD FORMED STEEL STUD WALLS.

SPECIAL WALL SCHEDULE

WALL ID	WALL THICKNESS (IN)	WALL MATERIAL	COMMENTS
GC-24	24	CONCRETE	
GC-20	20	CONCRETE	
GC-16	16	CONCRETE	
GC-12	12	CONCRETE	
GC-8	8	CONCRETE	
GC-7.5	7 1/2	CONCRETE	
GM-8	8	CMU	16" BLOCK LENGTH, TYP 18" BLOCK LENGTH, ALT.
GSP-8.5	8 1/2	STEEL SANDWICH PLATE	8" CONC CORE W/ (1) 1/2" THICK STL PLATE
GDP-8.75	8 3/4	STEEL SANDWICH PLATE	7" CONC CORE BETWEEN (2) 7/8" THICK STL PLATES
GDP-6	6	STEEL SANDWICH PLATE	5" CONC CORE BETWEEN (2) 1/2" THICK STL PLATES
GD-16	16	COLD-FORMED STEEL STUD W/ 1 1/2" 20 GA METAL DECK	1600S300-97 STUDS @ 12" O.C. UON
GS-6	6	COLD-FORMED STEEL STUD W/ GWB	600S250-97 STUDS @ 16" O.C. UON

REINFORCEMENT SCHEDULE

MARK	VERT BARS BAR SIZE	VERT BARS BAR SPACING (IN)	HORIZ BARS* BAR SIZE	HORIZ BARS* BAR SPACING (IN)
1	6	12	6	12
2	6	8	6	12
3	6	6	6	12
4	6	4	6	12
5	5	24	5	24
6	5	16	5	16
7	5	12	5	12
8	5	8	5	12
9	5	6	5	12
10	5	4	5	12

* HORIZONTAL BAR CALL OUTS ARE SPECIFICALLY FOR SPECIAL CONCRETE WALLS. SPECIAL MASONRY WALLS TO HAVE STANDARD LADDER MESH JOINT REINFORCEMENT EVERY OTHER COURSE.

HUDSON YARDS - RETAIL PODIUM AND TOWER A
500 WEST 33RD STREET
New York, NY

Client
Related Companies
60 Columbus Circle
New York, NY 10023
TEL: 212.801.1000 FAX: 212.801.1048

Oxford Properties Group
320 Park Avenue, 17th Floor
New York, NY 10022
TEL: 212.986.7514 FAX: 212.986.7510

Architect
Kohn Pedersen Fox Associates
11 West 42nd Street
New York, New York 10036
TEL: 212.977.6500 FAX: 212.956.2526

Structural Engineer
Thornton Tomasetti, Inc.
51 Madison Avenue
New York, New York 10010
TEL: 917.661.7800 FAX: 718.661.7801

Mechanical, Electrical, Plumbing, Fire Protection
Jaros Baum & Bolles Consulting Engineers
80 Pine Street
New York, NY 10013
TEL: 212.530.9300 FAX: 212.269.5894

Retail Interior Design & Planning
Elkus-Manfredi
300 A Street
Boston, MA 02210
TEL: 617.426.1300

1 D.O.B. AMENDMENT #2 10/15/2016
No. Description Date

Key Plan

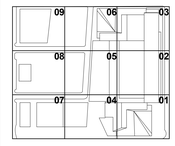

Issue Date: 10/15/2016
Project No. N11328.00
Drawn By Author
Sheet Number

HYE -TA -S8-1027
Drawing Title

STAIR C PART PLANS

Drawing Number
S8-1027
B-Scan Drawing Number
S-968.00

Damian Titus
Buildings
APPROVED
Under Directive 2 of 1975
MODIFICATION
Date: 05/03/2017
NYC Development Hub

0 2' 4' 8'

N

© 2013 KOHN PEDERSEN FOX ASSOCIATES PC. All rights reserved.

S8-1027
10/19/2016 10:46:52 AM
STAIR C PART PLANS
P:\NY\Projects\N11328.00\Drawings\Structural\Reconf\Issued\2016-10-16 - D.O.B. Amendment No.2\Revit - Rev. Removed\HYTA_S8-series.rvt

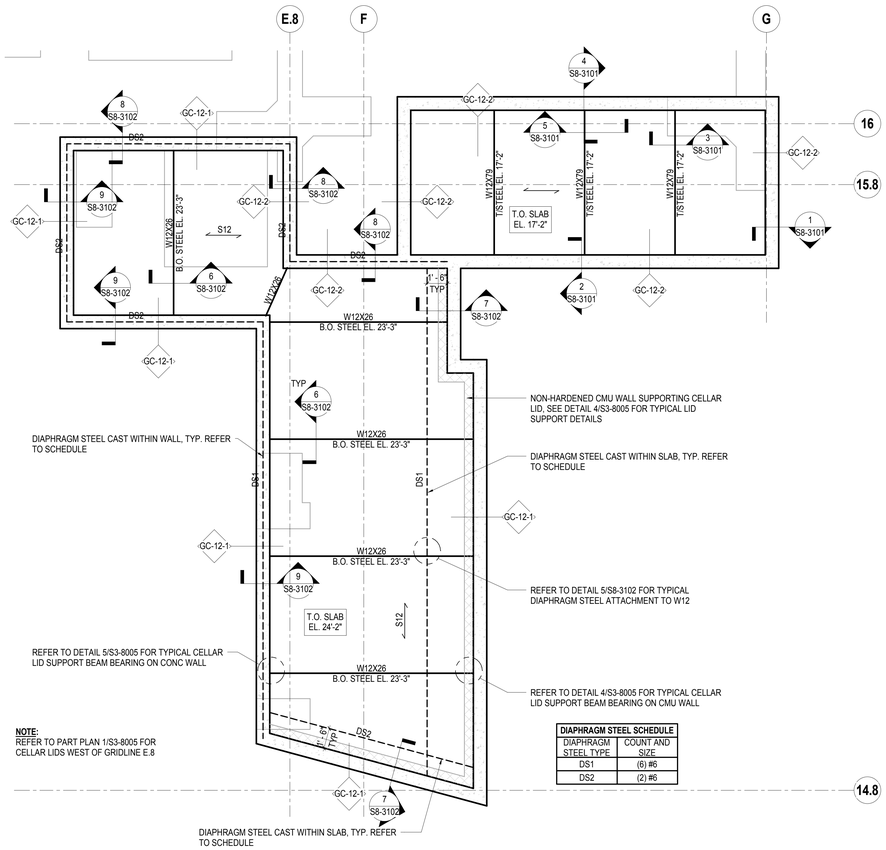

DIAPHRAGM STEEL SCHEDULE	
DIAPHRAGM STEEL TYPE	COUNT AND SIZE
DS1	(6) #6
DS2	(2) #6

1 PART PLAN - FUEL OIL PUMP ROOM (501) / FUEL OIL (503)/ FOAM SUPPRESSION TANKS (504) - CELLAR
1/4" = 1'-0"

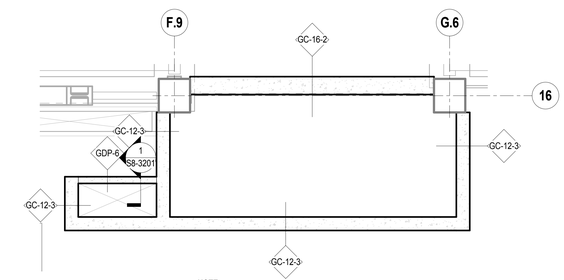

2 PART PLAN - ELEC (602) / TECH (603) - LEVEL 00
1/4" = 1'-0"

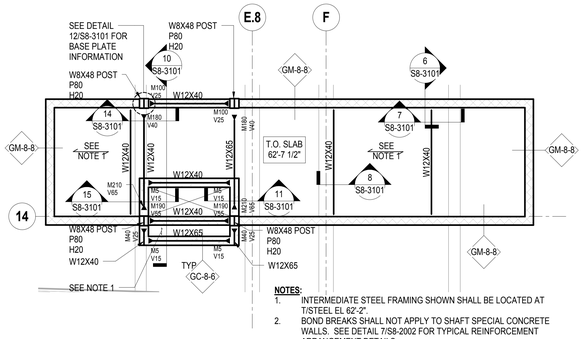

3 PART PLAN - ELECTRICAL CLOSET (601) / TECH (603) - LEVEL 01
1/4" = 1'-0"

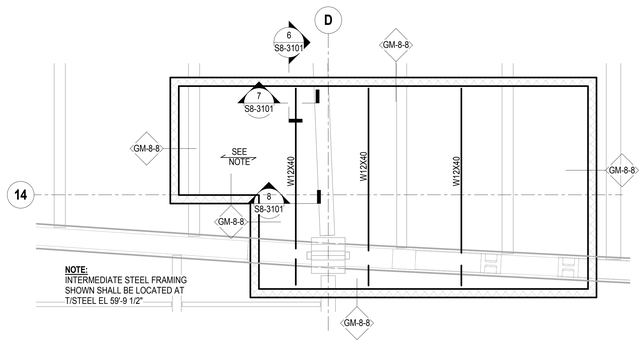

4 PART PLAN - FIRE COMMAND CENTER (501) - LEVEL 01
1/4" = 1'-0"

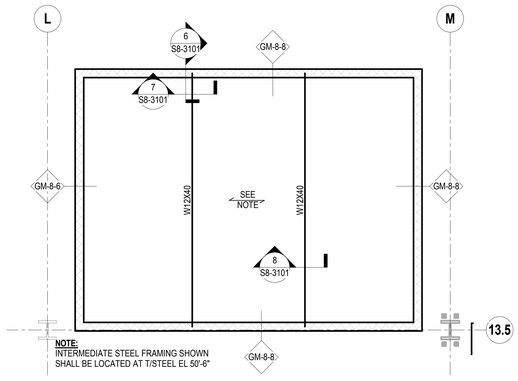

5 PART PLAN - FIRE COMMAND CENTER - UPPER PLATFORM
1/4" = 1'-0"

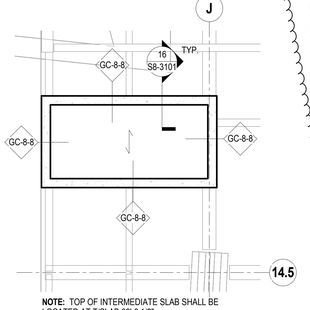

6 PART PLAN - ELEC (601) - LEVEL 03
1/4" = 1'-0"

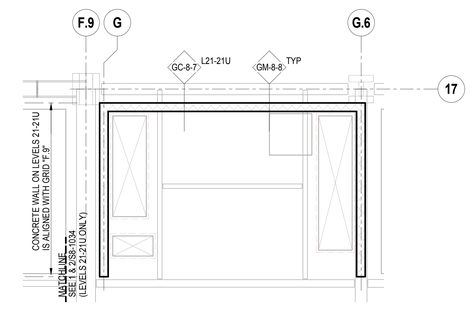

7 PART PLAN - ELECTRICAL CLOSET (603) - LEVELS 10-21U
1/4" = 1'-0"

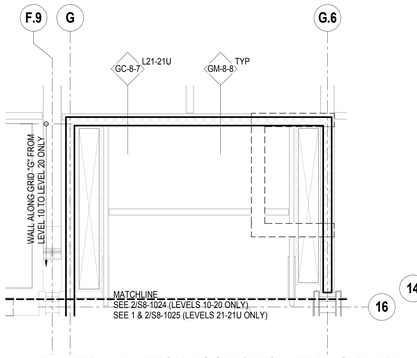

8 PART PLAN - TECH ROOM (602) - LEVELS 10-21U
1/4" = 1'-0"

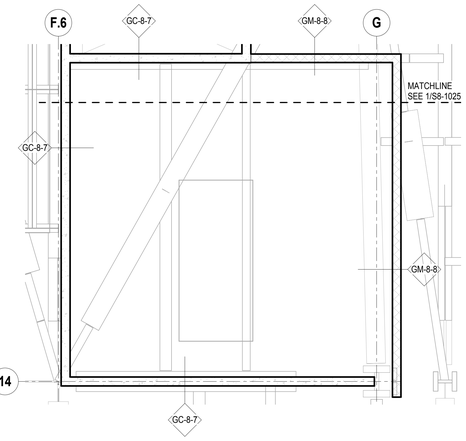

9 PART PLAN - PUMP ROOM (503) - LEVEL 21
1/4" = 1'-0"

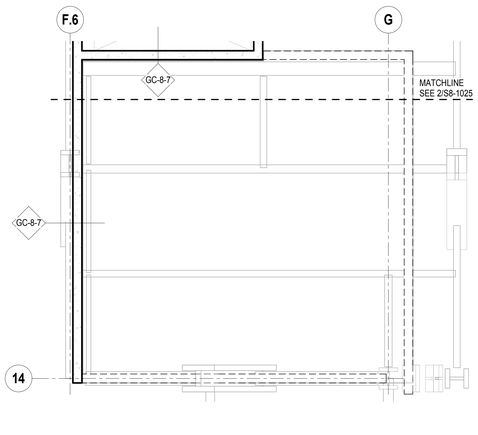

10 PART PLAN - STAIR C/E - LEVEL 21U
1/4" = 1'-0"

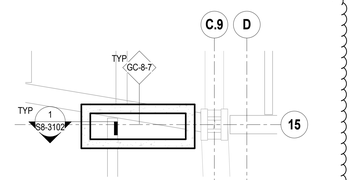

11 PART PLAN - FA PANEL - LEVEL 05
1/4" = 1'-0"

SHEET NOTES:
1. S8 SERIES DRAWINGS IDENTIFY SPECIAL WALLS.
2. SEE ARCHITECTURAL DRAWINGS FOR ALL WALL LOCATIONS AND FINISHES. SPECIAL WALLS SHOWN HERE MAY NOT REFLECT THE FULL WALL THICKNESS OR MAKE-UP AND ARE INTENDED TO CONVEY THE STRUCTURAL PROPERTIES ONLY. WALL PENETRATIONS FOR DOORWAYS / MEP SERVICES ARE NOT SHOWN ON THE S8-SERIES DRAWINGS.
3. SEE S1 SERIES DRAWINGS FOR FLOOR FRAMING. FRAMING SHOWN IN GREY ON S8 SERIES DRAWINGS IS INCLUDED FOR REFERENCE ONLY.
4. SEE S4 SERIES DRAWINGS FOR TYPICAL MASONRY NON-BEARING WALL DETAILS.
5. SEE S4 SERIES DRAWINGS FOR TYPICAL COMPOSITE DECK DETAILS NOT SHOWN OR INDICATED ON THE S8 SERIES DRAWINGS.
6. TYPICAL DETAILS ARE PROVIDED FOR SPECIAL WALL OPENINGS. ALL OPENINGS THAT DO NOT FALL WITHIN PARAMETERS OF THE TYPICAL DETAILS MUST BE APPROVED BY THE STRUCTURAL ENGINEER.
7. CORNERS AND INTERSECTIONS OF SPECIAL CONCRETE WALLS SHALL HAVE A BOND BREAK UON. SEE DETAIL 8/S8-2002 FOR TYPICAL BOND BREAK DETAILS.
8. CONCRETE STRENGTH OF SPECIAL WALLS SHALL MEET THE FOLLOWING 28-DAY COMPRESSIVE STRENGTHS (f'c), UON:
   CONCRETE WALLS 5,000 PSI
   STEEL PLATE WALLS 5,000 PSI
9. STEEL AND CONNECTION MATERIALS FOR SPECIAL WALLS SHALL CONFORM TO THE MINIMUM REQUIREMENTS AS INDICATED IN THE STRUCTURAL GENERAL NOTES EXCEPT AS FOLLOWS:
   ANGLES: ASTM A572, MINIMUM YIELD STRENGTH 50 KSI
   STEEL WALL PLATES: ASTM A572, MINIMUM YIELD STRENGTH 50 KSI
   COLD-FORMED STUDS: MINIMUM YIELD STRENGTH 50 KSI
10. THE FOLLOWING NOMENCLATURE AND TABLES ARE USED TO IDENTIFY THE STRUCTURAL MAKE-UP OF THE SPECIAL WALLS:

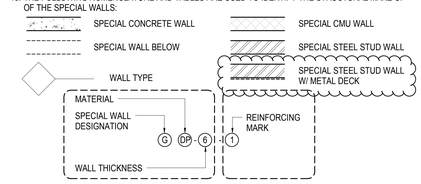

11. SEE S8-2001 AND S8-2002 FOR TYPICAL CONNECTION DETAILS FOR SPECIAL CONCRETE WALLS.
12. SEE S8-2003 FOR TYPICAL CONNECTION DETAILS FOR SPECIAL MASONRY WALLS.
13. SEE S8-2005 FOR TYPICAL CONNECTION DETAILS FOR STEEL SANDWICH PLATE WALLS.
14. SEE S8-2006 FOR TYPICAL CONNECTION DETAILS FOR SPECIAL COLD FORMED STEEL STUD WALLS.

SPECIAL WALL SCHEDULE

WALL ID	WALL THICKNESS (IN)	WALL MATERIAL	COMMENTS
GC-24	24	CONCRETE	
GC-20	20	CONCRETE	
GC-16	16	CONCRETE	
GC-12	12	CONCRETE	
GC-8	8	CONCRETE	
GC-7.5	7 1/2	CONCRETE	16" BLOCK LENGTH, TYP 18" BLOCK LENGTH, ALT.
GM-8	8	CMU	
GSP-8.5	8 1/2	STEEL SANDWICH PLATE	8" CONC CORE W/ (1) 1/2" THICK STL PLATE
GDP-8.75	8 3/4	STEEL SANDWICH PLATE	7" CONC CORE BETWEEN (2) 7/8" THICK STL PLATES
GDP-6	6	STEEL SANDWICH PLATE	5" CONC CORE BETWEEN (2) 1/2" THICK STL PLATES
GD-16	16	COLD-FORMED STEEL STUD W/ 1 1/2" 20 GA METAL DECK	1600S300-97 STUDS @ 12" O.C. UON
GS-6	6	COLD-FORMED STEEL STUD W/ GWB	600S250-97 STUDS @ 16" O.C. UON

REINFORCEMENT SCHEDULE

MARK	VERT BARS BAR SIZE	VERT BARS BAR SPACING (IN)	HORIZ BARS* BAR SIZE	HORIZ BARS* BAR SPACING (IN)
1	6	12	6	12
2	6	8	6	12
3	6	6	6	12
4	6	4	6	12
5	5	24	5	24
6	5	16	5	16
7	5	12	5	12
8	5	8	5	12
9	5	6	5	12
10	5	4	5	12

* HORIZONTAL BAR CALL OUTS ARE SPECIFICALLY FOR SPECIAL CONCRETE WALLS. SPECIAL MASONRY WALLS TO HAVE STANDARD LADDER MESH JOINT REINFORCEMENT EVERY OTHER COURSE.

HUDSON YARDS - RETAIL PODIUM AND TOWER A

500 WEST 33RD STREET
New York, NY

Client
Related Companies
60 Columbus Circle
New York, NY 10023
TEL: 212.801.1000 FAX: 212.801.1048

Oxford Properties Group
320 Park Avenue, 17th Floor
New York, NY 10022
TEL: 212.986.7514 FAX: 212.986.7510

Architect
Kohn Pedersen Fox Associates
11 West 42nd Street
New York, New York 10036
TEL: 212.977.6500 FAX: 212.956.2526

Structural Engineer
Thornton Tomasetti, Inc.
51 Madison Avenue
New York, New York 10010
TEL: 917.661.7800 FAX: 718.661.7801

Mechanical, Electrical, Plumbing, Fire Protection
Jaros Baum & Bolles Consulting Engineers
80 Pine Street
New York, NY 10013
TEL: 212.530.9300 FAX: 212.269.5894

Retail Interior Design & Planning
Elkus-Manfredi
300 A Street
Boston, MA 02210
TEL: 617.426.1300

No.	Description	Date
2	D.O.B. AMENDMENT #2	10/15/2016
1	D.O.B. BUILDING PERMIT FILING	12/10/2014

Key Plan

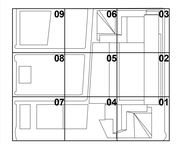

Issue Date: 12/10/2014
Project No. N11328.00
Drawn By: Author
Sheet Number

Damian Titus
Buildings
APPROVED
Under Directive 2 of 1975
AMENDED APPLICATION
Date: 10/31/2017
Development Hub

HYE -TA -S8-1101
Drawing Title

BUILDING OPERATIONS ROOM PART PLANS

Drawing Number
S8-1101
B-Scan Drawing Number
S-969.01

SHEET 417 OF 443

© 2013 KOHN PEDERSEN FOX ASSOCIATES PC. All rights reserved.

S8-1101 10/17/2016 10:48:35 AM P:\NY\Projects\N11328.00\Drawings\Structural\Record\Issued\2016-10-16 - D.O.B. Amendment No.2\Revit - Rev. Removed\HYTA_S8-series.rvt

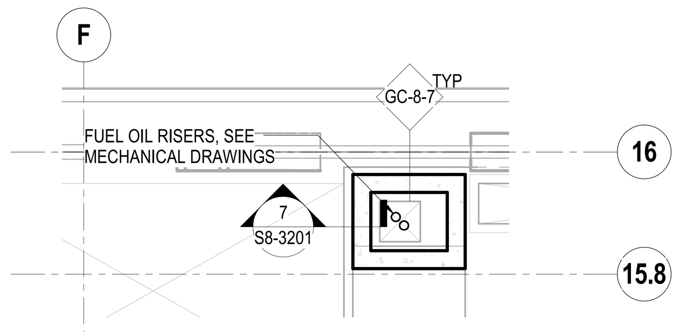

NOTES:
1. BOND BREAKS SHALL NOT APPLY TO THESE SPECIAL CONCRETE WALLS. SEE DETAIL 7/S8-2002 FOR TYPICAL REINFORCEMENT ARRANGEMENT DETAILS.
2. SPECIAL WALLS SHALL PENETRATE LEVEL 00 TO BEAR UPON LOWER PLATFORM UON.

1 FUEL OIL RISER - LEVEL 00
1/4" = 1'-0"

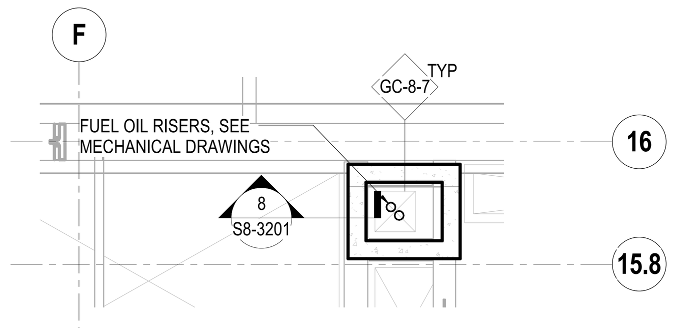

NOTE: BOND BREAKS SHALL NOT APPLY TO THESE SPECIAL CONCRETE WALLS. SEE DETAIL 7/S8-2002 FOR TYPICAL REINFORCEMENT ARRANGEMENT DETAILS.

2 FUEL OIL RISER - LEVEL 01
1/4" = 1'-0"

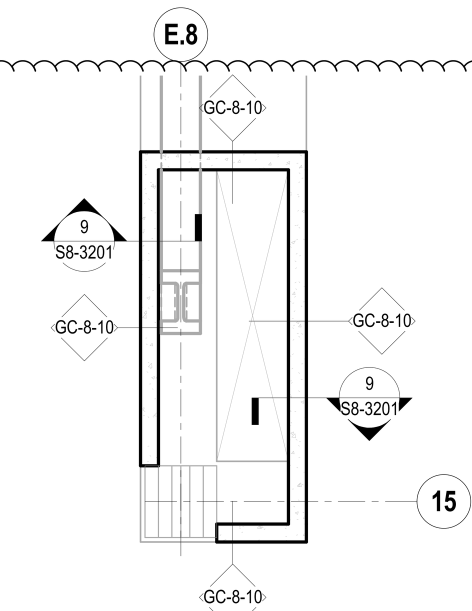

NOTES:
1. BOND BREAKS SHALL NOT APPLY TO THESE SPECIAL CONCRETE WALLS. SEE DETAIL 7/S8-2002 FOR TYPICAL REINFORCEMENT ARRANGEMENT DETAILS.
2. SPECIAL WALLS SHALL PENETRATE LEVEL 00 TO BEAR UPON LOWER PLATFORM
3. CONC SHAFT WALLS SUBJECT TO ACCESS PANEL OPENING, SEE DETAIL 15/S8-2002 FOR REVISED REINF ARRANGEMENT @ OPENING. SEE ARCH DWGS FOR LOCATION AND SIZE OF OPENING

3 PART PLAN - SHAFT AT GRID E.8-15 - LOWER PLATFORM - 00
1/4" = 1'-0"

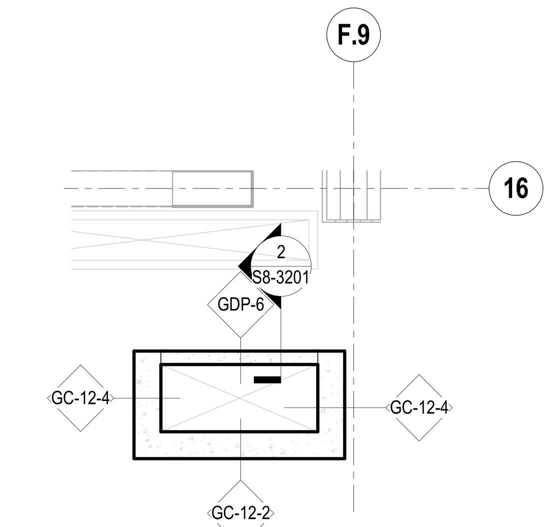

NOTE: SEE PART PLAN 2/S8-1101 FOR SHAFT WALL LAYOUT AT LEVEL 00.

4 PART PLAN - SHAFT AT GRID F.8-15.7 - LEVEL 01-02
1/4" = 1'-0"

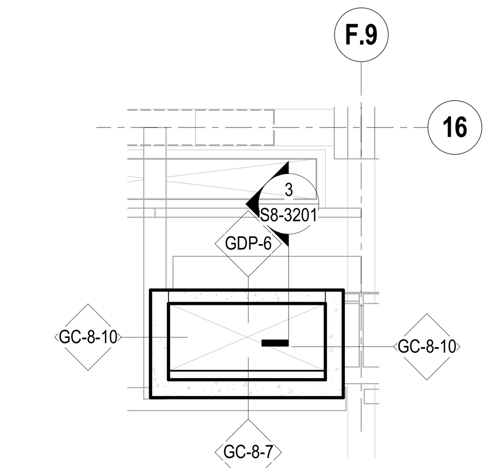

NOTES:
1. BOND BREAKS SHALL NOT APPLY TO THESE SPECIAL CONCRETE WALLS. SEE DETAIL 7/S8-2002 FOR TYPICAL REINFORCEMENT ARRANCEMENT DETAILS.
2. CONC SHAFT WALLS SUBJECT TO ACCESS PANEL OPENING, SEE DETAIL 15/S8-2002 FOR REVISED REINF ARRANGEMENT @ OPENING. SEE ARCH DWGS FOR LOCATION AND SIZE OF OPENING.

5 PART PLAN - SHAFT AT GRID F.8-15.7 - LEVEL 03
1/4" = 1'-0"

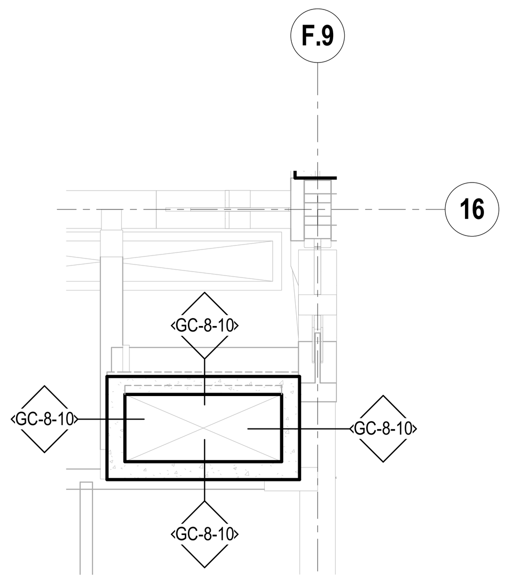

NOTE: BOND BREAKS SHALL NOT APPLY TO THESE SPECIAL CONCRETE WALLS. SEE DETAIL 7/S8-2002 FOR TYPICAL REINFORCEMENT ARRANGEMENT DETAILS.

6 PART PLAN - SHAFT AT GRID F.8-15.7 - LEVEL 04
1/4" = 1'-0"

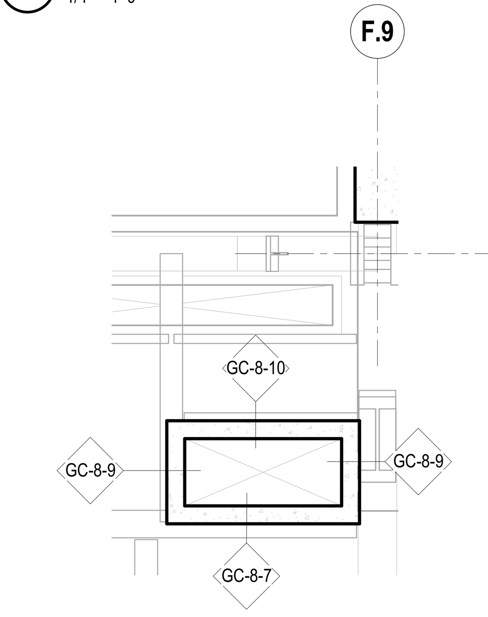

NOTES:
1. BOND BREAKS SHALL NOT APPLY TO THESE SPECIAL CONCRETE WALLS. SEE DETAIL 7/S8-2002 FOR TYPICAL REINFORCEMENT ARRANGEMENT DETAILS.
2. CONC SHAFT WALLS SUBJECT TO ACCESS PANEL OPENING, SEE DETAIL 15/S8-2002 FOR REVISED REINF ARRANGEMENT @ OPENING. SEE ARCH DWGS FOR LOCATION AND SIZE OF OPENING

7 PART PLAN - SHAFT AT GRID F.8-15.7 - LEVEL 05
1/4" = 1'-0"

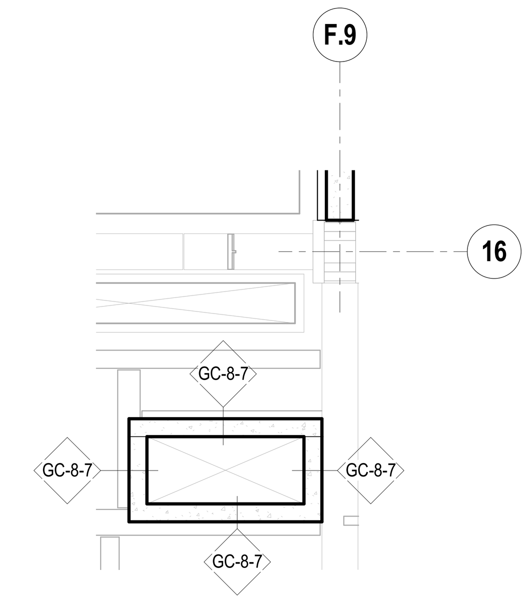

NOTES:
1. BOND BREAKS SHALL NOT APPLY TO THESE SPECIAL CONCRETE WALLS. SEE DETAIL 7/S8-2002 FOR TYPICAL REINFORCEMENT ARRANGEMENT DETAILS.
2. CONC SHAFT WALLS SUBJECT TO ACCESS PANEL OPENING, SEE DETAIL 15/S8-2002 FOR REVISED REINF ARRANGEMENT @ OPENING. SEE ARCH DWGS FOR LOCATION AND SIZE OF OPENING

8 PART PLAN - SHAFT AT GRID F.8-15.7 - LEVEL 06
1/4" = 1'-0"

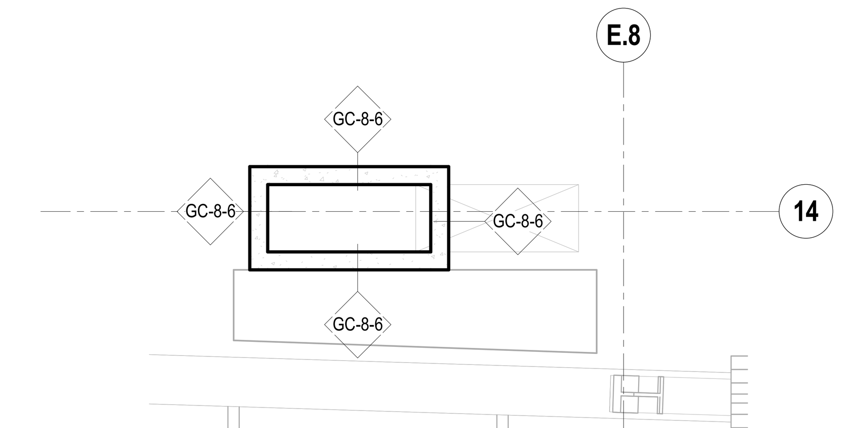

NOTE: BOND BREAKS SHALL NOT APPLY TO THESE SPECIAL CONCRETE WALLS. SEE DETAIL 7/S8-2002 FOR TYPICAL REINFORCEMENT ARRANGEMENT DETAILS.

9 PART PLAN - SHAFT AT GRID E.8-14 - LEVEL 03
1/4" = 1'-0"

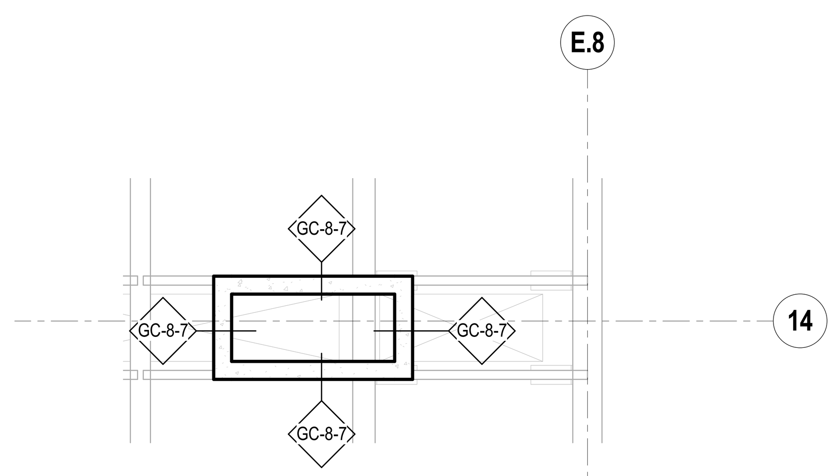

NOTES:
1. BOND BREAKS SHALL NOT APPLY TO THESE SPECIAL CONCRETE WALLS. SEE DETAIL 7/S8-2002 FOR TYPICAL REINFORCEMENT ARRANGEMENT DETAILS.
2. CONC SHAFT WALLS SUBJECT TO ACCESS PANEL OPENING, SEE DETAIL 15/S8-2002 FOR REVISED REINF ARRANGEMENT @ OPENING. SEE ARCH DWGS FOR LOCATION AND SIZE OF OPENING

10 PART PLAN - SHAFT AT GRID E.8-14 - LEVEL 04-06U
1/4" = 1'-0"

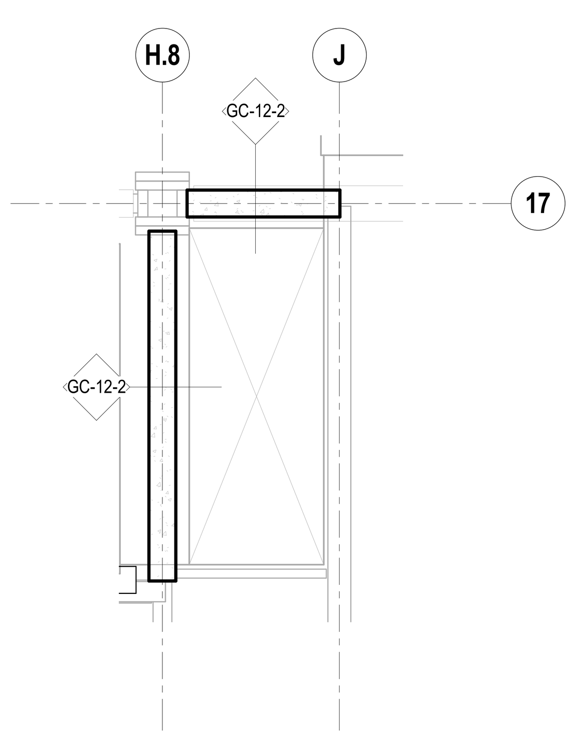

11 PART PLAN - SHAFT AT GRID H.8-17 - LEVEL 05
1/4" = 1'-0"

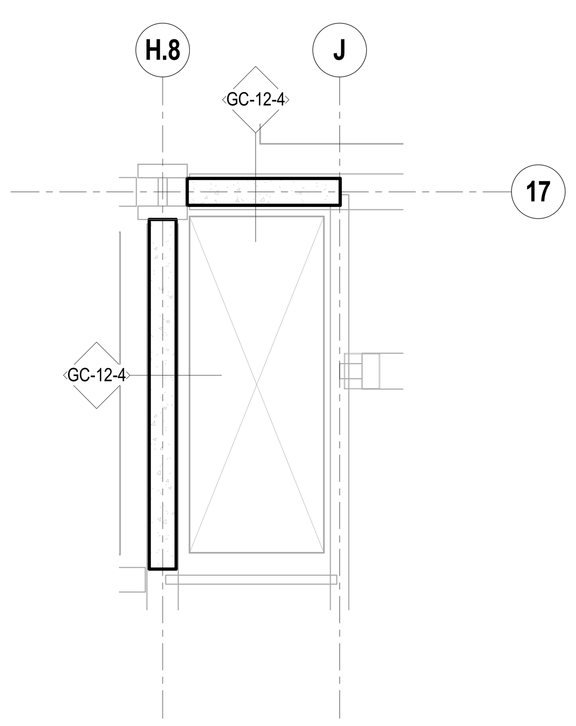

12 PART PLAN - SHAFT AT GRID H.8-17 - LEVEL 06-06U
1/4" = 1'-0"

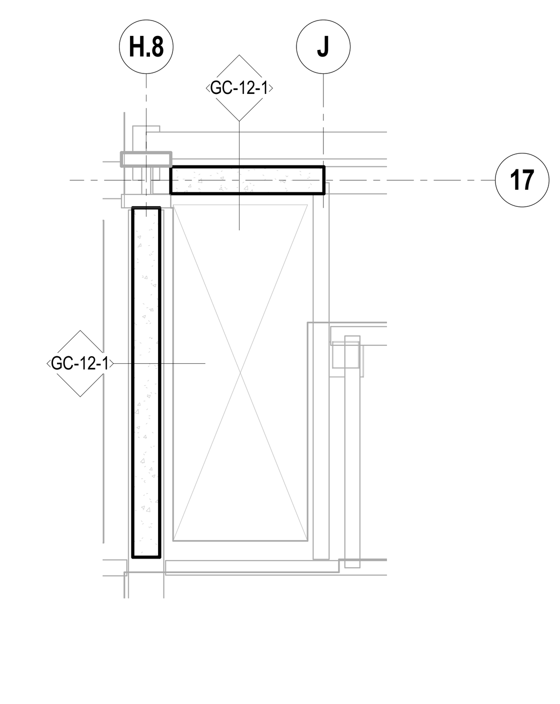

13 PART PLAN - SHAFT AT GRID H.8-17 - LEVELS 08-09U
1/4" = 1'-0"

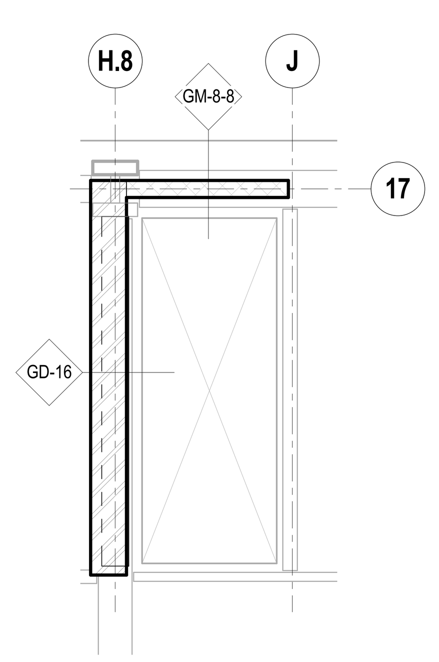

14 PART PLAN - SHAFT AT GRID H.8-17 - TYP LEVEL 10 - 20
1/4" = 1'-0"

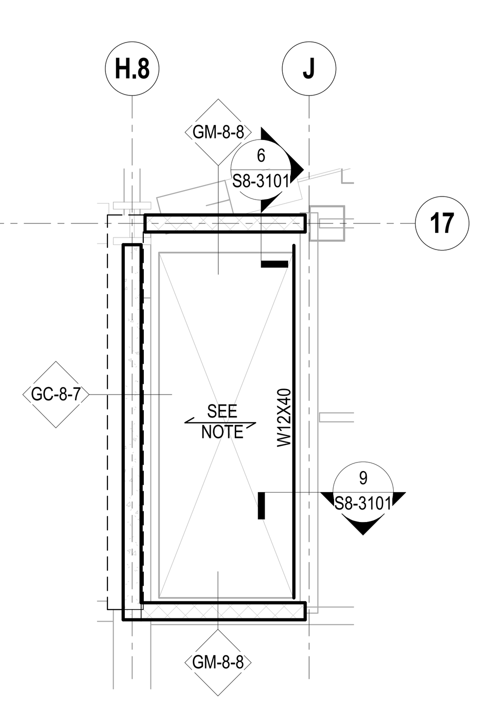

NOTE: TOP OF SHAFT LID SHALL BE LOCATED AT T/SLAB EL 408'-6"

15 PART PLAN - SHAFT AT GRID H.8-17 - LEVEL 21
1/4" = 1'-0"

SHEET NOTES:
1. S8 SERIES DRAWINGS IDENTIFY SPECIAL WALLS.
2. SEE ARCHITECTURAL DRAWINGS FOR ALL WALL LOCATIONS AND FINISHES. SPECIAL WALLS SHOWN HERE MAY NOT REFLECT THE FULL WALL THICKNESS OR MAKE-UP AND ARE INTENDED TO CONVEY THE STRUCTURAL PROPERTIES ONLY. WALL PENETRATIONS FOR DOORWAYS / MEP SERVICES ARE NOT SHOWN ON THE S8-SERIES DRAWINGS.
3. SEE S1 SERIES DRAWINGS FOR FLOOR FRAMING. FRAMING SHOWN IN GREY ON S8 SERIES DRAWINGS IS INCLUDED FOR REFERENCE ONLY.
4. SEE S4 SERIES DRAWINGS FOR TYPICAL MASONRY NON-BEARING WALL DETAILS.
5. SEE S4 SERIES DRAWINGS FOR TYPICAL COMPOSITE DECK DETAILS NOT SHOWN OR INDICATED ON THE S8 SERIES DRAWINGS.
6. TYPICAL DETAILS ARE PROVIDED FOR SPECIAL WALL OPENINGS. ALL OPENINGS THAT DO NOT FALL WITHIN PARAMETERS OF THE TYPICAL DETAILS MUST BE APPROVED BY THE STRUCTURAL ENGINEER.
7. CORNERS AND INTERSECTIONS OF SPECIAL CONCRETE WALLS SHALL HAVE A BOND BREAK UON. SEE DETAIL 8/S8-2002 FOR TYPICAL BOND BREAK DETAILS.
8. CONCRETE STRENGTH OF SPECIAL WALLS SHALL MEET THE FOLLOWING 28-DAY COMPRESSIVE STRENGTHS (f'c), UON:
   CONCRETE WALLS 5,000 PSI
   STEEL PLATE WALLS 5,000 PSI
9. STEEL AND CONNECTION MATERIALS FOR SPECIAL WALLS SHALL CONFORM TO THE MINIMUM REQUIREMENTS AS INDICATED IN THE STRUCTURAL GENERAL NOTES EXCEPT AS FOLLOWS:
   ANGLES: ASTM A572, MINIMUM YIELD STRENGTH 50 KSI
   STEEL WALL PLATES: ASTM A572, MINIMUM YIELD STRENGTH 50 KSI
   COLD-FORMED STUDS: MINIMUM YIELD STRENGTH 50 KSI
10. THE FOLLOWING NOMENCLATURE AND TABLES ARE USED TO IDENTIFY THE STRUCTURAL MAKE-UP OF THE SPECIAL WALLS:

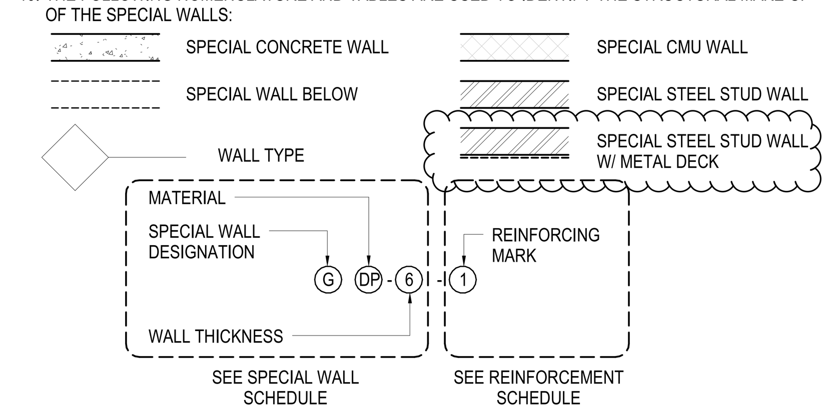

11. SEE S8-2001 AND S8-2002 FOR TYPICAL CONNECTION DETAILS FOR SPECIAL CONCRETE WALLS.
12. SEE S8-2003 FOR TYPICAL CONNECTION DETAILS FOR SPECIAL MASONRY WALLS.
13. SEE S8-2005 FOR TYPICAL CONNECTION DETAILS FOR STEEL SANDWICH PLATE WALLS.
14. SEE S8-2006 FOR TYPICAL CONNECTION DETAILS FOR SPECIAL COLD FORMED STEEL STUD WALLS.

SPECIAL WALL SCHEDULE

WALL ID	WALL THICKNESS (IN)	WALL MATERIAL	COMMENTS
GC-24	24	CONCRETE	
GC-20	20	CONCRETE	
GC-16	16	CONCRETE	
GC-12	12	CONCRETE	
GC-8	8	CONCRETE	
GC-7.5	7 1/2	CONCRETE	
GM-8	8	CMU	16" BLOCK LENGTH, TYP 18" BLOCK LENGTH, ALT.
GSP-8.5	8 1/2	STEEL SANDWICH PLATE	8" CONC CORE W/ (1) 1/2" THICK STL PLATE
GDP-8.75	8 3/4	STEEL SANDWICH PLATE	7" CONC CORE BETWEEN (2) 7/8" THICK STL PLATES
GDP-6	6	STEEL SANDWICH PLATE	5" CONC CORE BETWEEN (2) 1/2" THICK STL PLATES
GD-16	16	COLD-FORMED STEEL STUD W/ 1 1/2" 20 GA METAL DECK	1600S300-97 STUDS @ 12" O.C. UON
GS-6	6	COLD-FORMED STEEL STUD W/ GWB	600S250-97 STUDS @ 16" O.C. UON

REINFORCEMENT SCHEDULE

MARK	VERT BARS BAR SIZE	VERT BARS BAR SPACING (IN)	HORIZ BARS* BAR SIZE	HORIZ BARS* BAR SPACING (IN)
1	6	12	6	12
2	6	8	6	12
3	6	6	6	12
4	6	4	6	12
5	5	24	5	24
6	5	16	5	16
7	5	12	5	12
8	5	8	5	12
9	5	6	5	12
10	5	4	5	12

* HORIZONTAL BAR CALL OUTS ARE SPECIFICALLY FOR SPECIAL CONCRETE WALLS. SPECIAL MASONRY WALLS TO HAVE STANDARD LADDER MESH JOINT REINFORCEMENT EVERY OTHER COURSE.

0 4' 8' 16'
N

Damian Titus
NYC Buildings
APPROVED
Under Directive 2 of 1975
AMENDED APPLICATION
Date: 09/09/2017
NYC Development Hub

HUDSON YARDS - RETAIL PODIUM AND TOWER A
500 WEST 33RD STREET
New York, NY

Client
Related Companies
60 Columbus Circle
New York, NY 10023
TEL: 212.801.1000 FAX: 212.801.1048

Oxford Properties Group
320 Park Avenue, 17th Floor
New York, NY 10022
TEL: 212.986.7514 FAX: 212.986.7510

Architect
Kohn Pedersen Fox Associates
11 West 42nd Street
New York, New York 10036
TEL: 212.977.6500 FAX: 212.956.2526

Structural Engineer
Thornton Tomasetti, Inc.
51 Madison Avenue
New York, New York 10010
TEL: 917.661.7800 FAX: 718.661.7801

Mechanical, Electrical, Plumbing, Fire Protection
Jaros Baum & Bolles Consulting Engineers
80 Pine Street
New York, NY 10013
TEL: 212.530.9300 FAX: 212.269.5894

Retail Interior Design & Planning
Elkus-Manfredi
300 A Street
Boston, MA 02210
TEL: 617.426.1300

No.	Description	Date
2	D.O.B. AMENDMENT #2	10/15/2016
1	D.O.B. BUILDING PERMIT FILING	12/10/2014

Key Plan

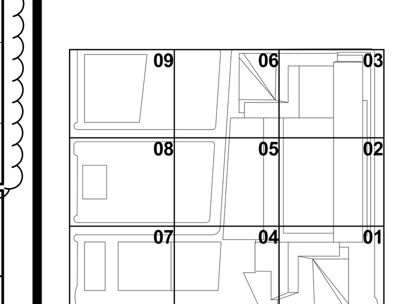

Issue Date: 12/10/2014
Project No. N11328.00
Drawn By Author
Sheet Number

STATE OF NEW YORK MICHAEL J. SQUARZINI LICENSED PROFESSIONAL ENGINEER No. 080840

HYE -TA -S8-1201

Drawing Title

SHAFT WALL PART PLANS

Drawing Number
S8-1201
B-Scan Drawing Number
S-970.01

© 2013 KOHN PEDERSEN FOX ASSOCIATES PC. All rights reserved.

S8-1201
10/19/2016 10:49:28 AM
SHAFT WALL PART PLANS
P:\NY1\Projects\N11328.00\Drawings\Structural\Record\Issued\2016-10-16 - D.O.B. Amendment No.2\Revit - Rev. Removed\HYTA_S8-series.rvt

DEPT OF BLDGS 121186251 Job Number
ES488177545 Scan Code

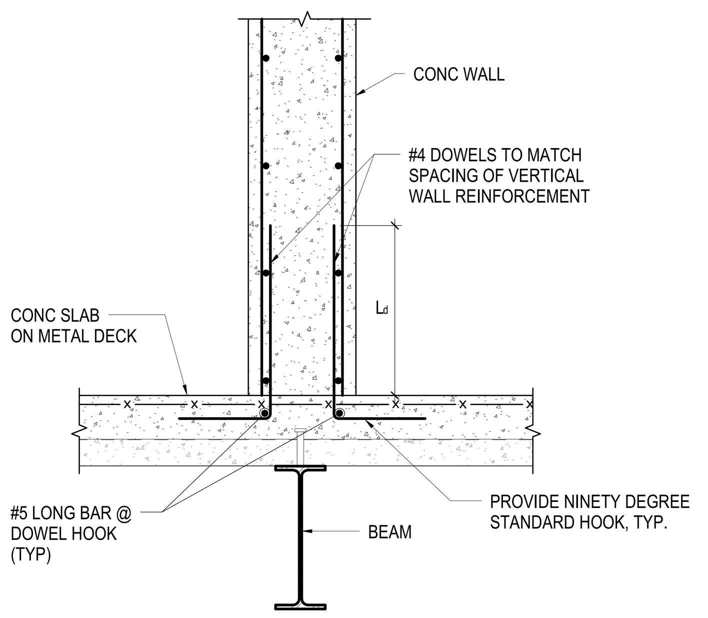

NOTE: SEE DETAIL 1A/S8-2001A FOR ALTERNATIVE POST-INSTALLED OPTION

1 TYPICAL CONCRETE WALL BASE DETAIL AT SLAB ON METAL DECK
1" = 1'-0"

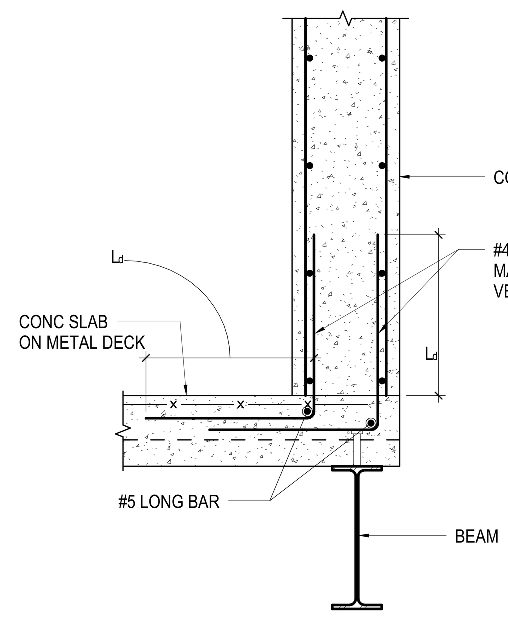

NOTES:
1. SEE DETAIL 2A/S8-2001A FOR ALTERNATIVE POST-INSTALLED OPTION
2. SEE DETAILS 12/S8-2002 AND 13/S8-2002 FOR COMPOSITE STEEL DECK REINFORCEMENT AT SLAB EDGE

2 TYPICAL CONCRETE WALL BASE DETAIL AT SLAB ON METAL DECK - SHAFT CONDITION
1" = 1'-0"

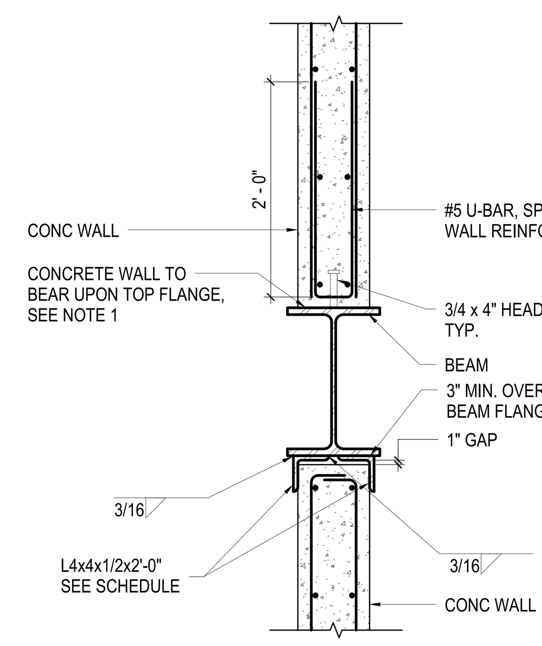

SCHEDULE	
WALL TYPE	ANGLE O.C. SPACING
GC-8	4'-0"
GC-12 GC-16 GC-24	2'-6"

NOTES:
1. IF BEAM FLANGE WIDTH IS LESS THAN CONCRETE WALL WIDTH PROVIDE PLATE AS SHOWN IN DETAIL 3A/S8-2001
2. IF BEAM FLANGE UNABLE TO ACCOMMODATE 3" OVERLAPS PROVIDE PLATE AS SHOWN IN DETAIL 3B/S8-2001
3. SEE DETAIL 3A/S8-2001A FOR ALTERNATIVE DETAIL AT WALL OFFSET CONDITION

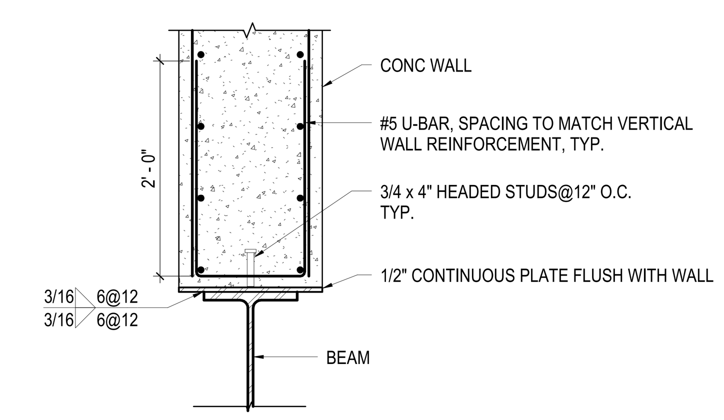

3A CONCRETE WALL TO BEAM (PLATE OPTION)
1" = 1'-0"

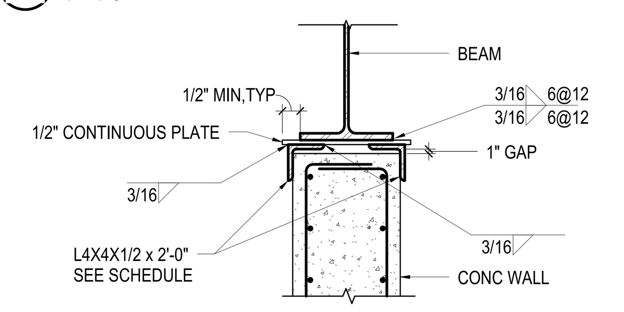

3B CONCRETE WALL TO BEAM (PLATE OPTION)
1" = 1'-0"

3 TYPICAL CONCRETE WALL ANCHORAGE DETAIL AT STEEL BEAM - SHAFT CONDITION
1" = 1'-0"

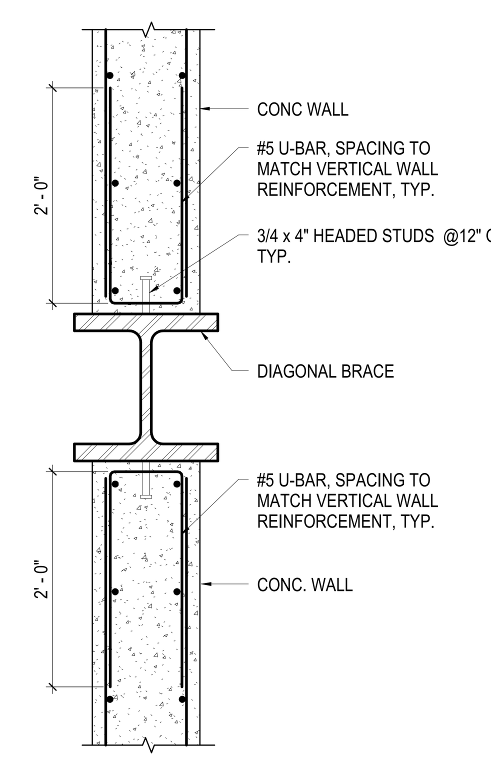

4 TYPICAL CONCRETE WALL ANCHORAGE DETAIL AT DIAGONAL BRACE
NOT TO SCALE

SHEET NOTES:
1. DETAIL 8/S8-2001 SHALL BE USED FOR CONCRETE WALL TOP ANCHORAGE TO STEEL BEAM AT LOCATIONS WHERE THERE IS EITHER A SLAB OPENING ON ONE SIDE OF THE WALL OR NO ADJACENT SLAB OPENINGS U.O.N.
2. DETAIL 3/S8-2001 SHALL BE USED FOR CONCRETE WALL TOP ANCHORAGE TO STEEL BEAM AT LOCATIONS WHERE THERE IS A SLAB OPENING ON BOTH SIDES OF THE WALL U.O.N.
3. DETAIL 9/S8-2001 SHALL BE USED IN PLACE OF DETAIL 8/S8-2001 ONLY WHEN SHAFT SIDE ACCESS TO FIELD WELDED ANGLE IS NOT AVAILABLE.
4. DETAIL 10/S8-2001 SHALL BE USED IN PLACE OF DETAIL 8/S8-2001 WHEN ALIGNMENT OF CONCRETE WALL BELOW STEEL BEAM EXCEEDS THE OFFSET CONSTRAINTS SPECIFIED BY DETAIL 8/S8-2001.
5. DETAILS 6/S8-2001 OR 7/S8-2001 SHALL BE USED FOR CONCRETE WALL TOP ANCHORAGES TO SLAB-ON-METAL DECK WHEN ALIGNMENT OF WALL DOES NOT PERMIT ANCHORAGE TO STEEL BEAM WITHIN DIMENSIONAL CONSTRAINTS PROVIDED FOR TYPICAL STEEL BEAM ANCHORAGE DETAILS.
6. DETAILS 11/S8-2001 OR 12/S8-2001 SHALL BE USED FOR CONCRETE WALL TOP ANCHORAGES TO INTERMEDIATE SLAB DIAPHRAGMS WHERE PROVIDED OVER STAIR TRANSFERS AND BUILDING OPERATIONS ROOMS U.O.N.

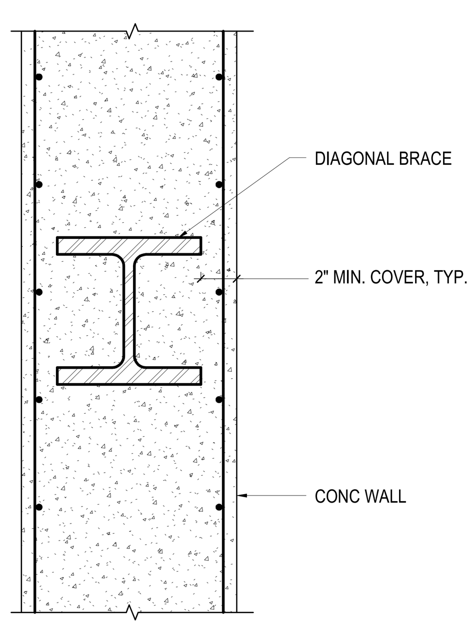

5 TYPICAL CONCRETE WALL DETAIL AT ENCASED DIAGONAL BRACE
1" = 1'-0"

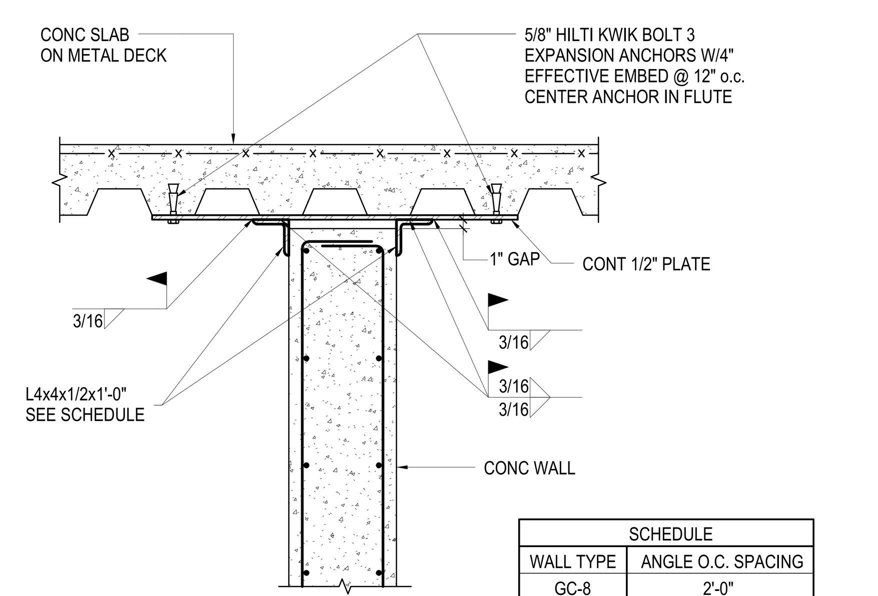

SCHEDULE	
WALL TYPE	ANGLE O.C. SPACING
GC-8	2'-0"
GC-12 GC-16 GC-24	1'-3"

NOTE: SEE DETAIL 6A/S8-2001A FOR ALTERNATE DETAIL

6 TYPICAL CONCRETE WALL TOP BRACE DETAIL AT SLAB ON METAL DECK - FLUTES PARALLEL
1" = 1'-0"

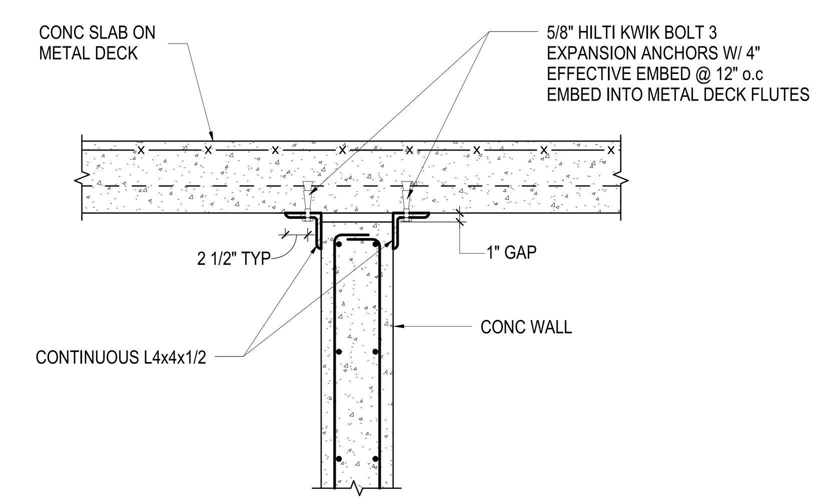

7 TYPICAL CONCRETE WALL TOP BRACE DETAIL AT SLAB ON METAL DECK - FLUTES PERPENDICULAR
1" = 1'-0"

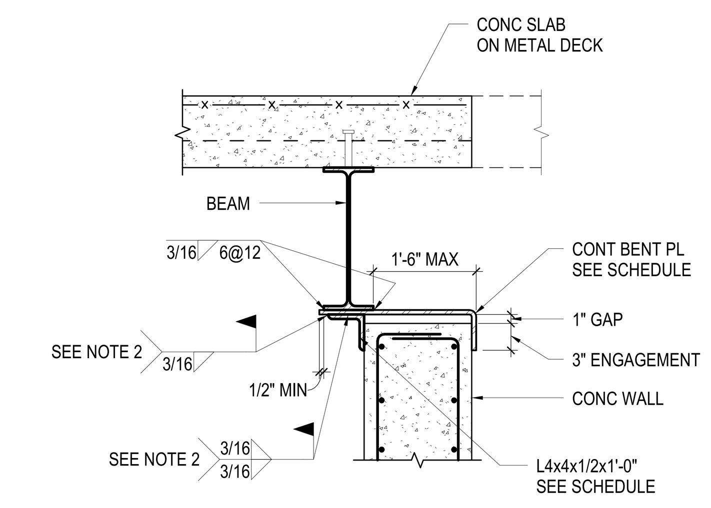

SCHEDULE		
WALL TYPE	ANGLE O.C. SPACING	BENT PLATE THICKNESS
GC-8	2'-0"	3/8"
GC-12 GC-16 GC-24	1'-3"	1/2"

NOTES:
1. SEE DETAIL 8A/S8-2001A FOR WALL OFFSET CONDITION AT BENT PLATE
2. IF ANGLE IS ALTERNATIVELY SHOP WELDED TO BENT PLATE OR FIELD WELDED PRIOR TO WALL CONSTRUCTION, SEE DETAIL 8A/S8-2001A FOR MODIFIED ANGLE SIZE AND SPACING TO ACCOMMODATE CONCRETE POUR AND FOR WALL OFFSET CONDITION AT ANGLE

8 TYPICAL CONCRETE WALL BRACE DETAIL AT STEEL BEAM
1" = 1'-0"

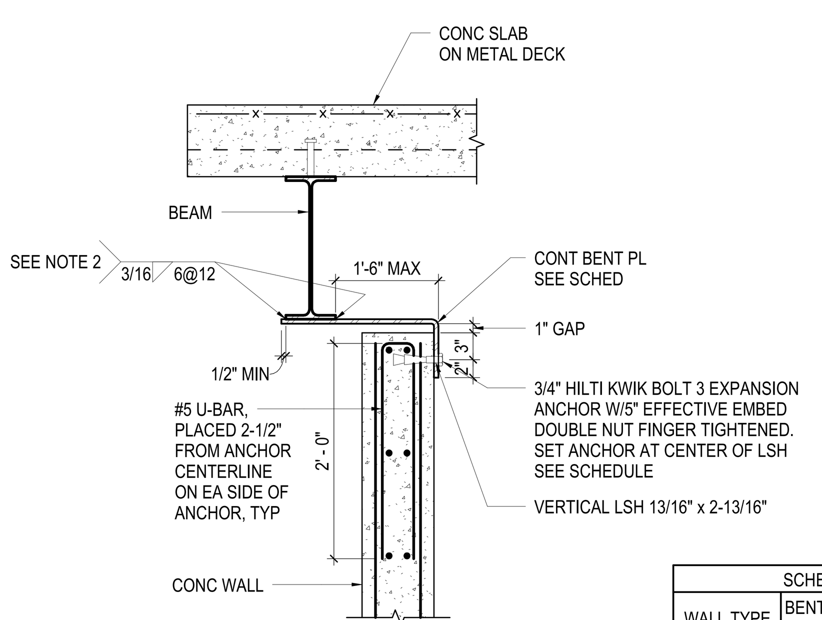

SCHEDULE		
WALL TYPE	BENT PLATE THICKNESS	ANCHOR SPACING
GC-8	3/8"	12"
GC-12 GC-16 GC-24	1/2"	9"

NOTE:
1. DETAIL APPLIES WHERE SHAFT SIDE ACCESS TO ANGLE IS NOT AVAILABLE
2. BENT PLATE MAY BE SHOP WELDED OR FIELD WELDED TO BEAM. IF BENT PLATE IS WELDED TO BEAM PRIOR TO WALL CONSTRUCION, SEE DETAIL 9A/S8-2001A FOR WALL OFFSET CONDITION

9 TYPICAL CONCRETE WALL TOP BRACE DETAIL AT STEEL BEAM - SHAFT CONDITION
1" = 1'-0"

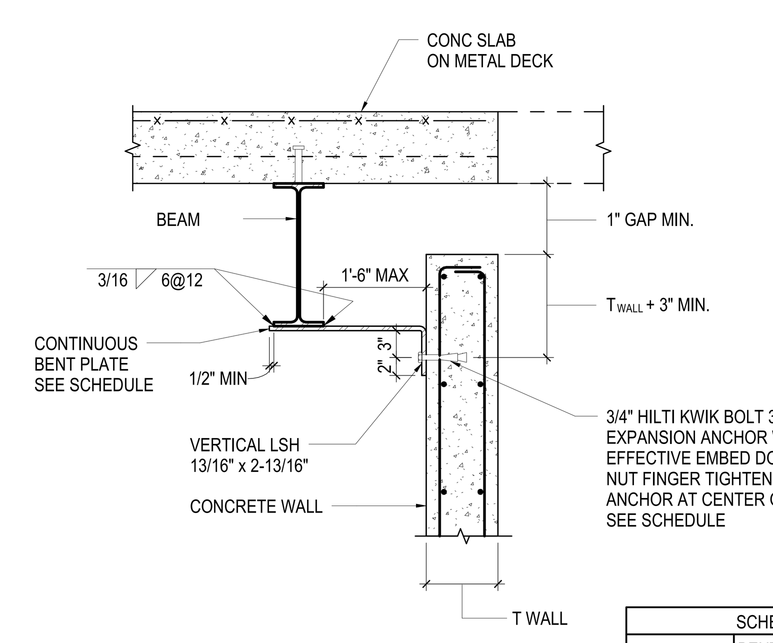

SCHEDULE		
WALL TYPE	BENT PLATE THICKNESS	ANCHOR SPACING
GC-8	3/8"	12"
GC-12 GC-16 GC-24	1/2"	9"

NOTE: SEE DETAILS 10A AND 10B/S8-2001A FOR WALL OFFSET CONDITIONS

10 TYPICAL CONCRETE WALL TOP BRACE DETAIL AT STEEL BEAM - OFFSET CONDITION
1" = 1'-0"

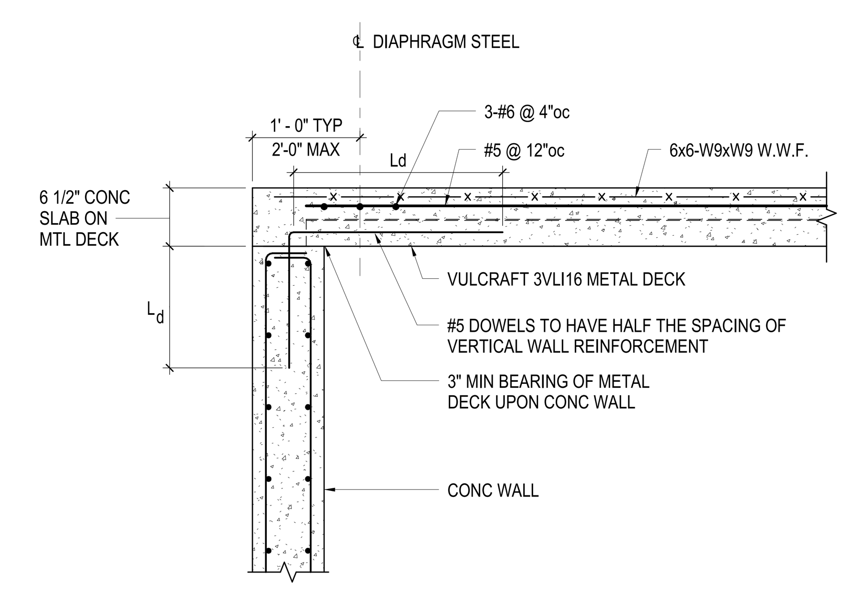

11 TYPICAL RAISED SLAB DIAPHRAGM DETAIL FOR CONCRETE WALLS - METAL DECK PERPENDICULAR TO WALL
1" = 1'-0"

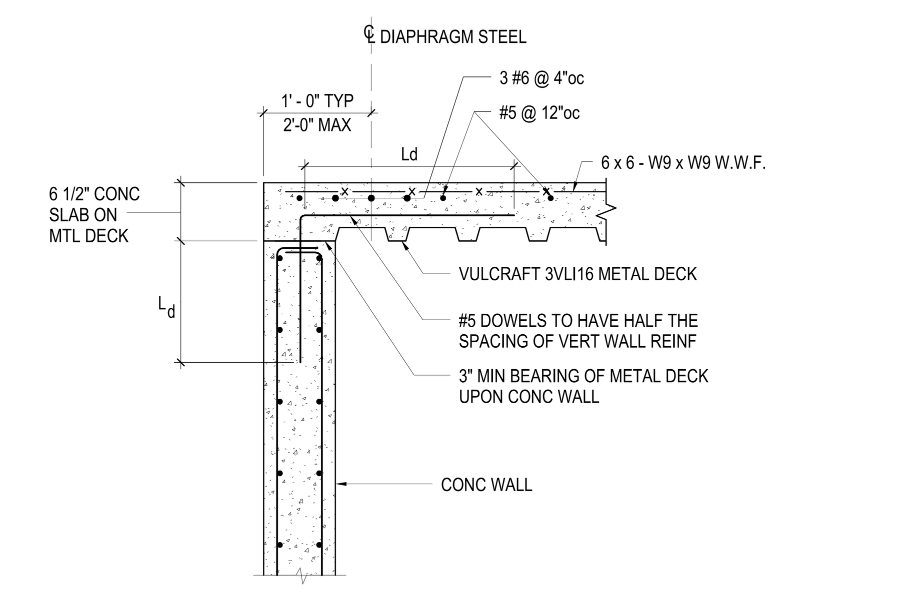

12 TYPICAL RAISED SLAB DIAPHRAGM DETAIL FOR CONCRETE WALLS - METAL DECK PARALLEL TO WALL
1" = 1'-0"

Damian Titus
Buildings
APPROVED
Under Directive 2 of 1975
AMENDED APPLICATION
Date: 05/03/2017
NYC Development Hub

HUDSON YARDS - RETAIL PODIUM AND TOWER A
500 WEST 33RD STREET
New York, NY

Client
Related Companies
60 Columbus Circle
New York, NY 10023
TEL: 212.801.1000 FAX: 212.801.1048

Oxford Properties Group
320 Park Avenue, 17th Floor
New York, NY 10022
TEL: 212.986.7514 FAX: 212.986.7510

Architect
Kohn Pedersen Fox Associates
11 West 42nd Street
New York, New York 10036
TEL: 212.977.6500 FAX: 212.956.2526

Structural Engineer
Thornton Tomasetti, Inc.
51 Madison Avenue
New York, New York 10010
TEL: 917.661.7800 FAX: 718.661.7801

Mechanical, Electrical, Plumbing, Fire Protection
Jaros Baum & Bolles Consulting Engineers
80 Pine Street
New York, NY 10013
TEL: 212.530.9300 FAX: 212.269.5894

Retail Interior Design & Planning
Elkus-Manfredi
300 A Street
Boston, MA 02210
TEL: 617.426.1300

No.	Description	Date
2	D.O.B. AMENDMENT #2	10/15/2016
1	D.O.B. BUILDING PERMIT FILING	12/10/2014

Key Plan

STATE OF NEW YORK · MICHAEL J. SQUARZINI · LICENSED PROFESSIONAL ENGINEER · No. 080840

Issue Date: 12/10/2014
Project No. N11328.00
Drawn By
Sheet Number
HYE -TA -S8-2001
Drawing Title
SPECIAL CONCRETE WALL TYPICAL DETAILS
Drawing Number
S8-2001
B-Scan Drawing Number
S-971.01
SHEET 420 OF 443

© 2013 KOHN PEDERSEN FOX ASSOCIATES PC. All rights reserved.

S8-2001
SPECIAL CONCRETE WALL TYPICAL DETAILS
10/19/2016 10:50:03 AM P:\NY\1Projects\N11328.00\Drawings\Structural\Record\Issued\2016-10-16 - D.O.B Amendment No.2\Revit - Rev. Removed\HYTA_S8-series.rvt

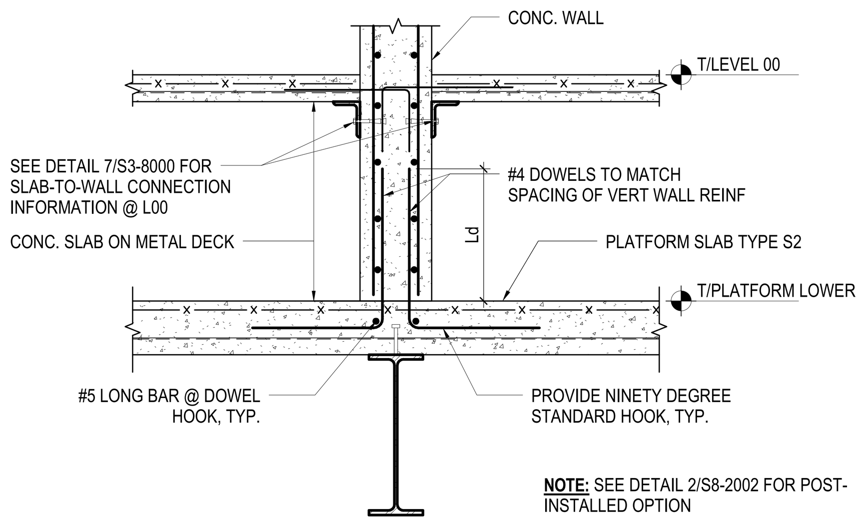

1 TYPICAL CONCRETE WALL BASE DETAIL AT LOWER PLATFORM
1" = 1'-0"

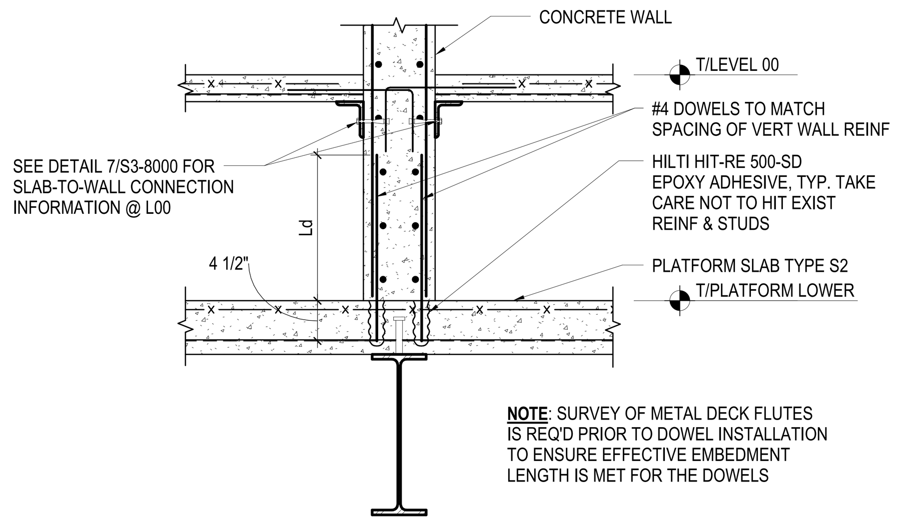

2 TYPICAL CONCRETE WALL BASE DETAIL AT LOWER PLATFORM - POST - INSTALLED OPTION
1" = 1'-0"

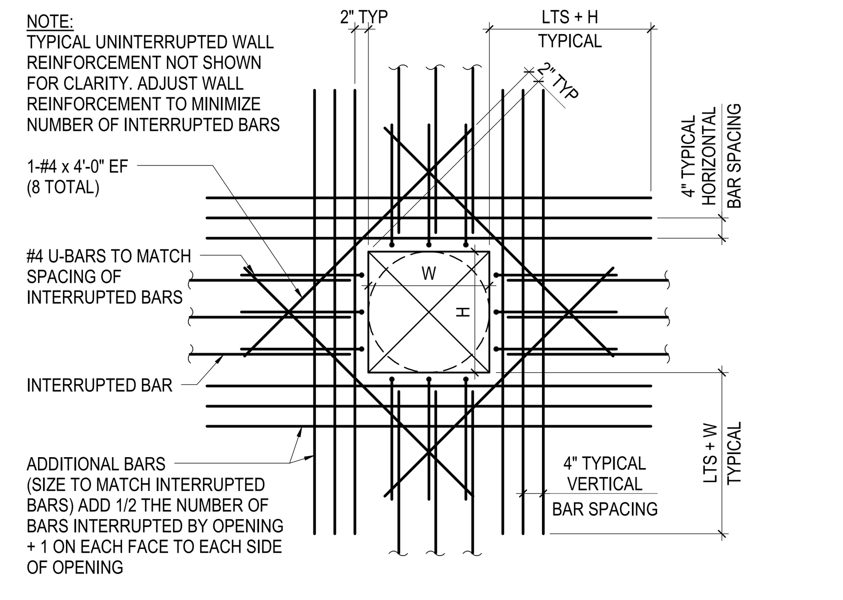

NOTE: STEEL BEAM PENETRATIONS THROUGH SPECIAL CONC WALLS SHALL PROVIDE MIN. 1" CLEARANCE AROUND STEEL BEAM. GAPS BETWEEN CONC AND STEEL MUST BE FIRE-SAFED.

3 TYPICAL OPENING IN CONCRETE WALL (OPENING 10" TO 30")
NOT TO SCALE

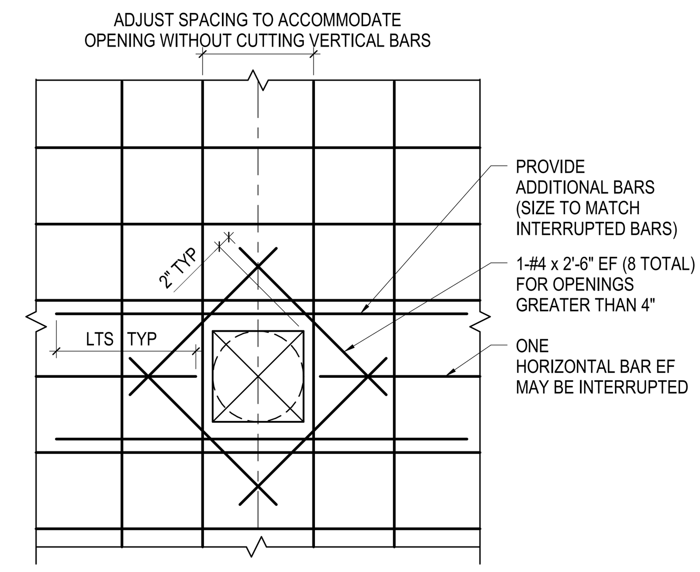

4 TYPICAL OPENING IN CONCRETE WALL (OPENING LESS THAN 10")
NOT TO SCALE

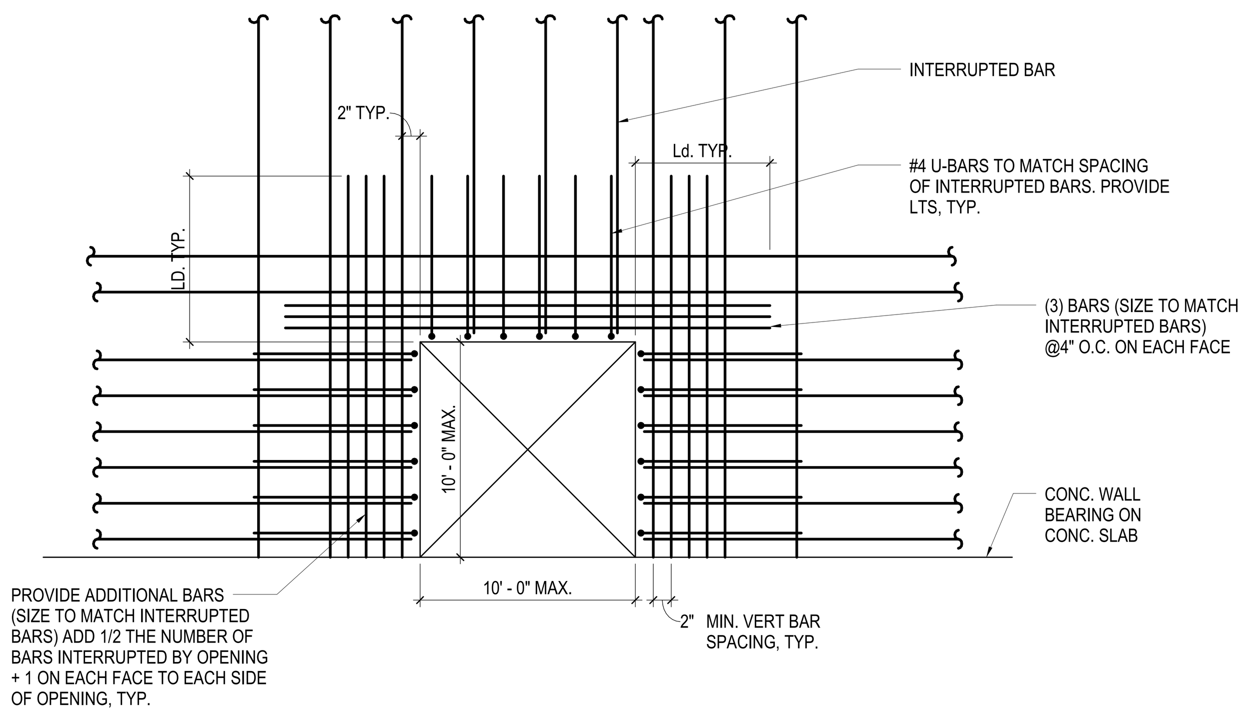

NOTE:
REFER TO DETAIL 2/S8-2002A FOR TYPICAL ARRANGEMENT AROUND MULTIPLE OPENINGS.

5 TYPICAL LARGE OPENING IN SPECIAL CONCRETE WALLS
1" = 1'-0"

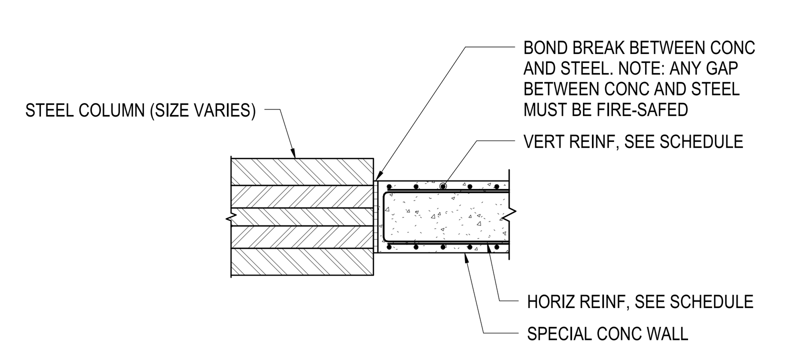

6 TYPICAL CONCRETE WALL ABUTTING COLUMN
NOT TO SCALE

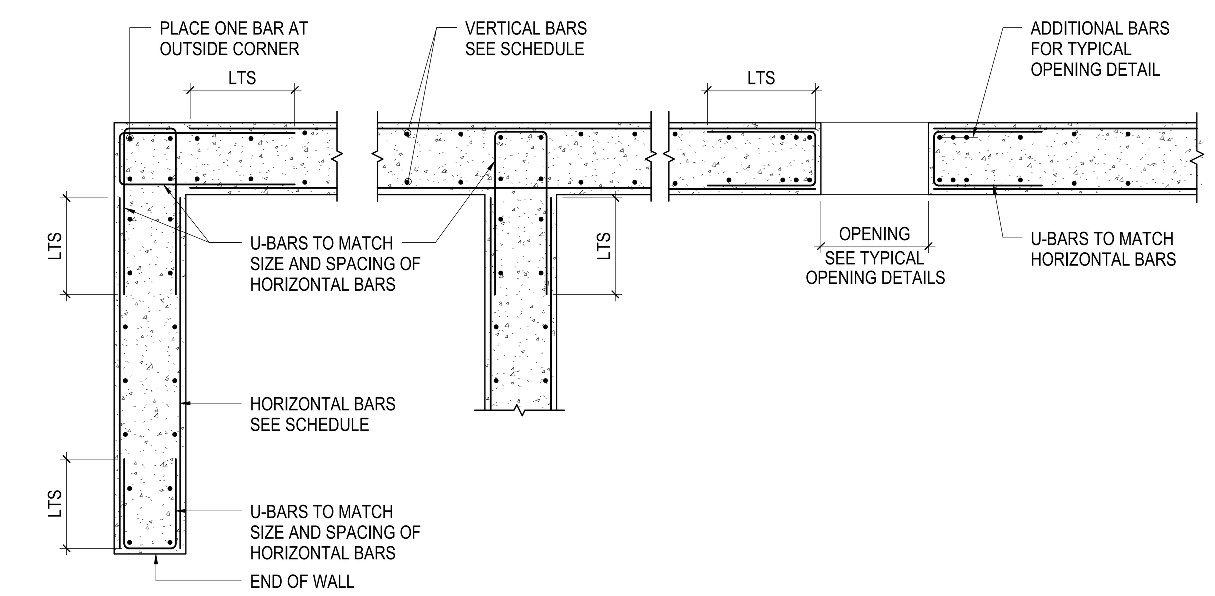

7 TYPICAL SPECIAL CONCRETE REINFORCEMENT ARRANGEMENT - PLAN
NOT TO SCALE

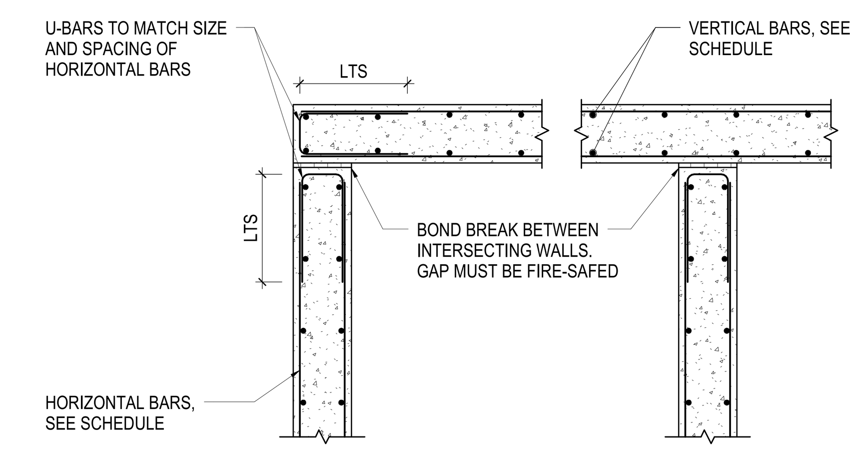

8 TYPICAL SPECIAL CONCRETE WALL REINFORCEMENT ARRANGEMENT - BOND BREAK AT WALL CORNERS/INTERSECTIONS - PLAN
1" = 1'-0"

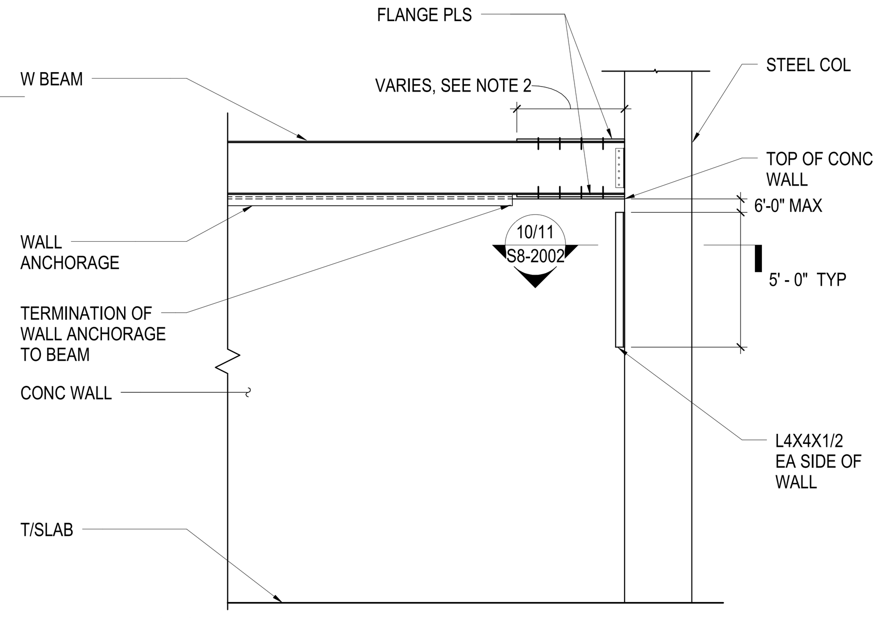

NOTES:
1. DETAIL SHALL NOT APPLY IF TOP WALL ANCHORAGE IS ABLE TO ABUT COLUMN
2. DETAIL APPLIES FOR FLANGE PLATE LENGTHS NOT EXCEEDING 5'-0"
3. DETAIL APPLICABLE FOR LEVELS 00-06

9 CONCRETE WALL BRACE DETAIL AT STEEL COLUMN - ELEVATION
1/4" = 1'-0"

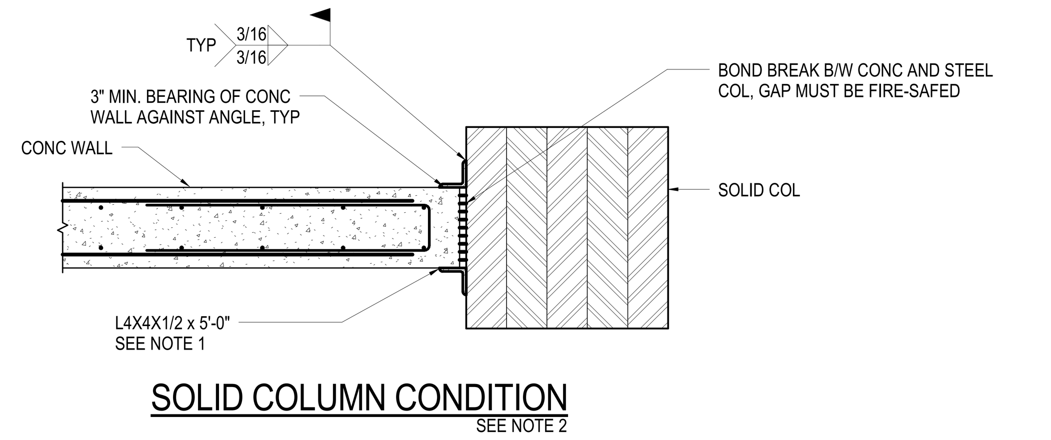

NOTES:
1. ONE OR BOTH ANGLES MAY BE FLIPPED INWARDS TO ACCOMMODATE THICKER WALLS OR WALLS OFFSET FROM COLUMN CENTERLINE
2. DETAIL ALSO APPLIES TO BOX COLUMNS AND WHEN THE CONCRETE WALL ABUTS THE FLANGE OF BUILT-UP WIDE FLANGE COLUMNS OR WIDE FLANGE COLUMNS.

10 CONCRETE WALL BRACE DETAIL AT STEEL COLUMN - PLAN
3/4" = 1'-0"

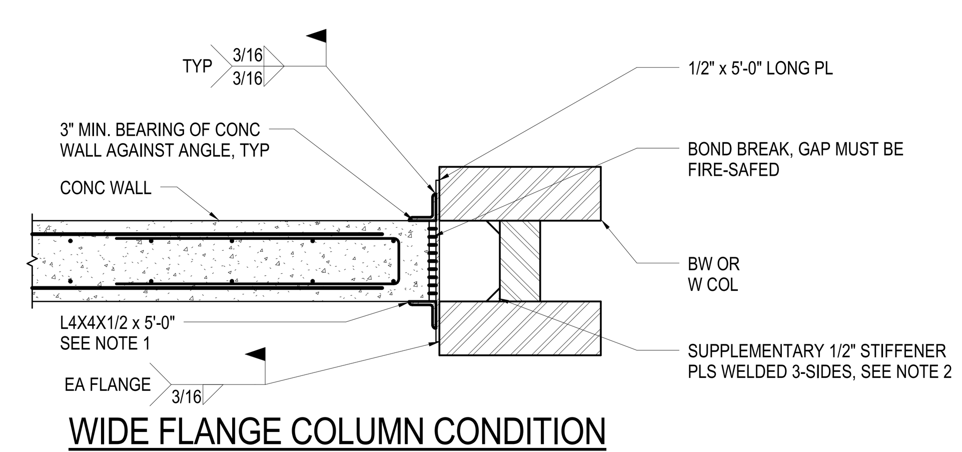

NOTES:
1. ONE OR BOTH ANGLES MAY BE FLIPPED INWARDS TO ACCOMMODATE THICKER WALLS OR WALLS OFFSET FROM COLUMN CENTERLINE.
2. STIFFENER PLATES @ T & B OF 1/2" x 5'0" LONG PLATE SHALL BE PROVIDED WHEN FLANGE THICKNESS < 5/8".
3. REFER TO DETAIL 1/S8-2002A FOR POST-INSTALLED CONCRETE WALL BRACE DETAIL AT STEEL COLUMN.

11 CONCRETE WALL BRACE DETAIL AT STEEL COLUMN - PLAN
3/4" = 1'-0"

CANTILEVER REINFORCEMENT SCHEDULE		
TOTAL SLAB THICKNESS* (IN)	CANTILEVER SPAN 'L'	CANTILEVER REINFORCEMENT
5 1/2" TO 7 1/2"	0'-2" < L ≤ 0'-10"	#4@12"
	0'-10" < L ≤ 1'-1"	#4@6"
	1'-1" < L ≤ 1'-5"	#5@6"
UP TO 9 1/2"	0'-2" < L ≤ 1'-0"	#4@12"
	1'-0" < L ≤ 1'-7"	#4@6"
	1'-7" < L ≤ 2'-2"	#5@6"
UP TO 11"	0'-2" < L ≤ 1'-3"	#4@12"
	1'-3" < L ≤ 2'-1"	#4@6"

*CONCRETE OVER 3" METAL DECK

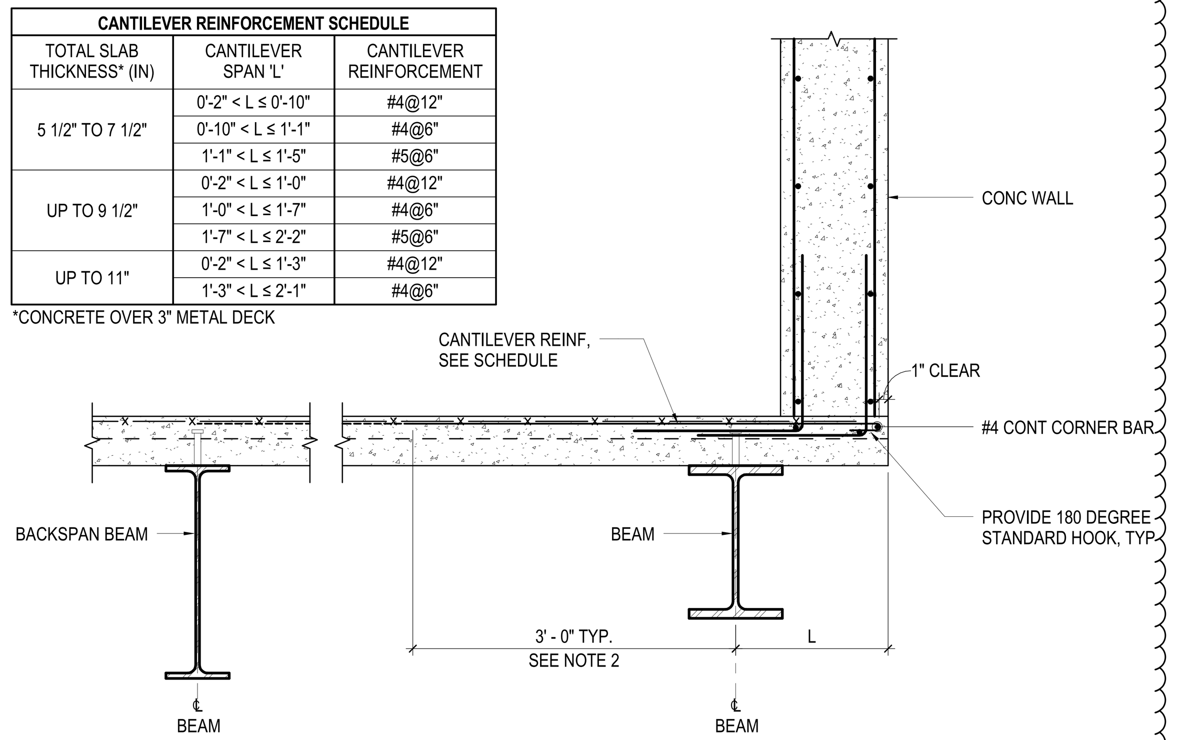

NOTES:
1. SEE DETAIL 5/S4-3001 FOR INFORMATION NOT SHOWN OR INDICATED.
2. FOR SLABS WITH W.W.F. ONLY, CANTILEVER REINFORCEMENT SHALL EXTEND TO CENTERLINE OF BACKSPAN BEAM.

12 SPECIAL CONCRETE WALL AT SLAB EDGE - DECK PERPENDICULAR TO BEAM
1" = 1'-0"

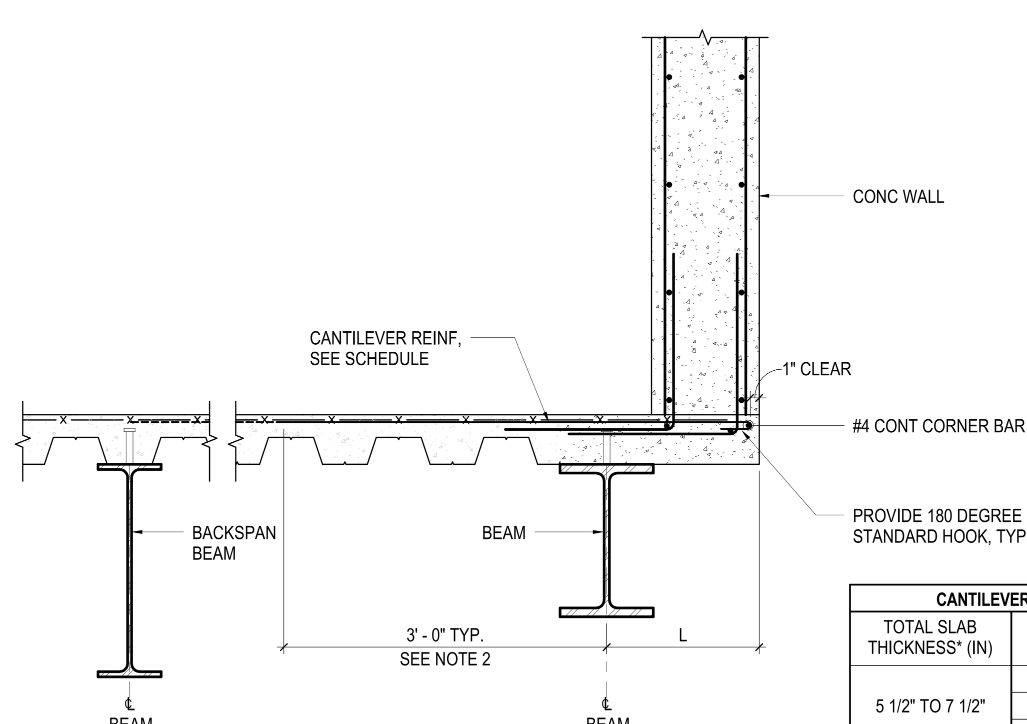

CANTILEVER REINFORCEMENT SCHEDULE		
TOTAL SLAB THICKNESS* (IN)	CANTILEVER SPAN 'L'	CANTILEVER REINFORCEMENT
5 1/2" TO 7 1/2"	0'-2" < L ≤ 1'-0"	#4@12"
	1'-0" < L ≤ 1'-6"	#4@6"
	1'-6" < L ≤ 2'-0"	#5@6"
UP TO 9 1/2"	0'-2" < L ≤ 1'-3"	#4@12"
	1'-3" < L ≤ 1'-11"	#4@6"
UP TO 11"	0'-2" < L ≤ 1'-6"	#4@12"
	1'-6" < L ≤ 2'-5"	#4@6"

*CONCRETE OVER 3" METAL DECK

NOTE:
1. SEE DETAIL 5/S4-3001 FOR INFORMATION NOT SHOWN OR INDICATED.
2. FOR SLABS WITH W.W.F. ONLY, CANTILEVER REINFORCEMENT SHALL EXTEND TO CENTERLINE OF BACKSPAN BEAM.

13 SPECIAL CONCRETE WALL AT SLAB EDGE - DECK PARALLEL TO BEAM
1" = 1'-0"

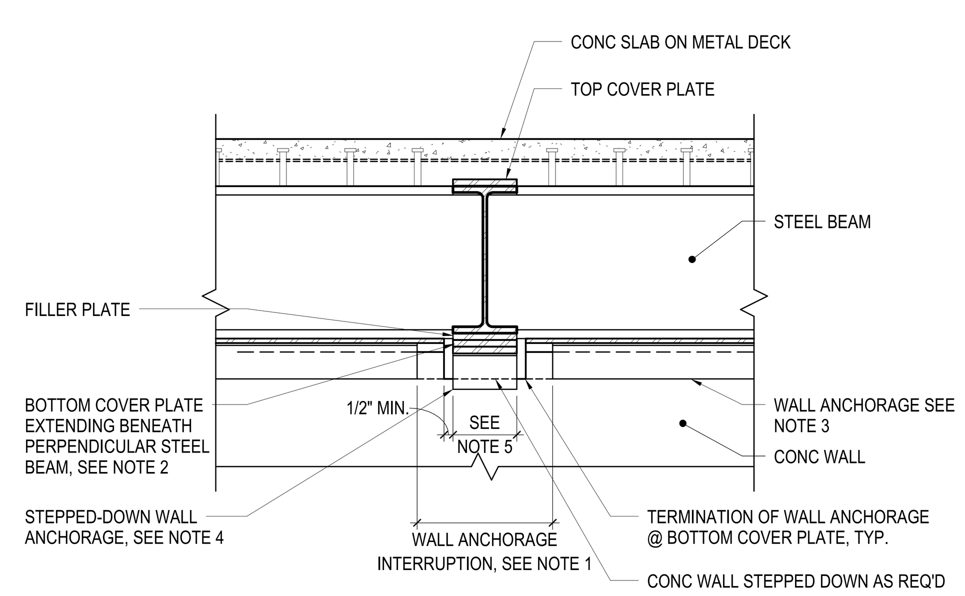

NOTES:
1. ANCHORAGE GAPS UP TO 2'-0" ARE ACCEPTABLE WITHOUT SUPPLEMENTAL ANCHORAGE. THIS DETAIL APPLICABLE WHEN GAP DUE TO WALL ANCHORAGE INTERRUPTION EXCEEDS 2'-0" OR WHERE ANCHORAGE GAPS LESS THAN 2'-0" LONG ARE SPACED AT LESS THAN 5'-0" CLEAR.
2. DETAIL APPLICABLE ONLY WHEN COVER PLATE BOLTS DO NOT INTERFERE WITH PLACEMENT OF STEPPED DOWN WALL ANCHORAGE.
3. APPLICABLE TOP WALL ANCHORAGE, SEE S8-2001.
4. STEPPED-DOWN WALL ANCHORAGE TO MATCH ADJACENT WALL ANCHORAGE. ATTACHMENT TO COVER PLATE TO CONFORM TO APPLICABLE TOP WALL ANCHORAGE DETAILS, SEE S8-2001
5. LENGTH OF STEPPED-DOWN WALL ANCHORAGE TO MATCH WIDTH OF COVER PLATE.

14 TYPICAL WALL ANCHORAGE INTERRUPTION @ STEEL BEAM
1" = 1'-0"

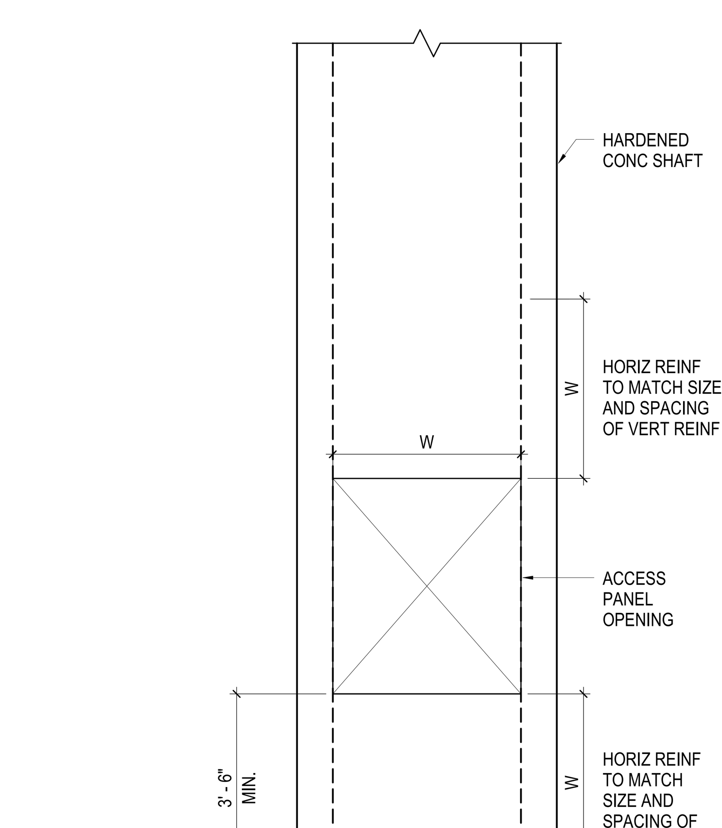

15 TYPICAL ACCESS PANEL OPENING IN CONC SHAFT
1/2" = 1'-0"

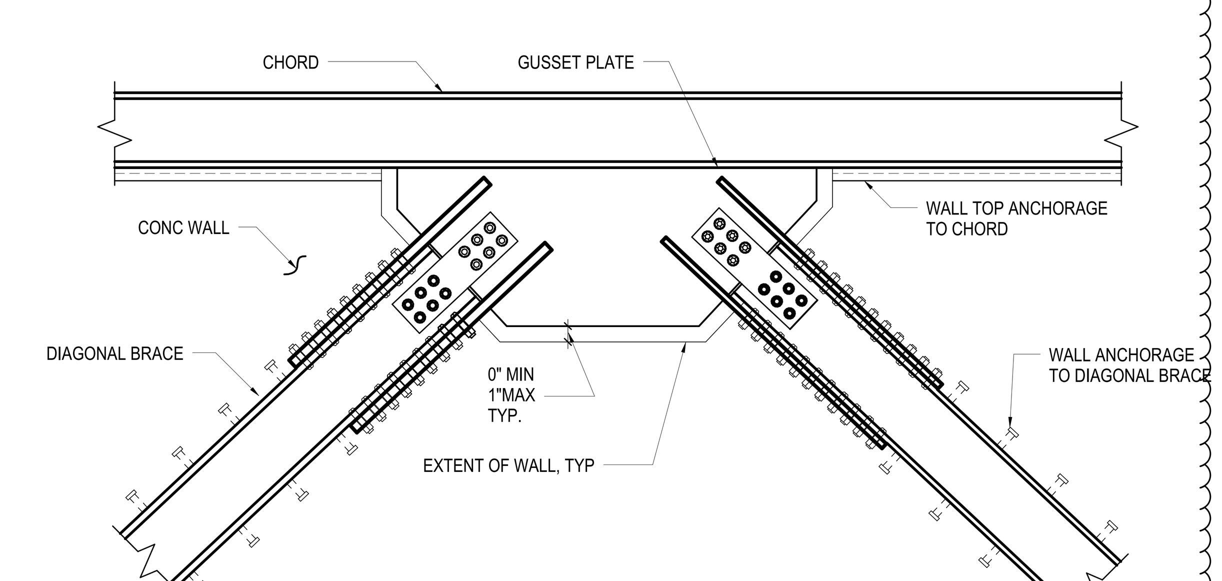

NOTES:
1. SEE TYPICAL CONC WALL DETAILS FOR INFORMATION NOT SHOWN
2. SEE DETAIL 16A/S8-2001A FOR CONCRETE WALL @ GUSSET PLATE WITH ENCASEMENT

16 CONCRETE WALL @ GUSSET PLATE - NO ENCASEMENT
1" = 1'-0"

Damian Titus
Buildings
APPROVED
Under Directive 2 of 1975
AMENDED APPLICATION
Date: 05/03/2017
NYC Development Hub

0 4' 8' 16'
N

HUDSON YARDS - RETAIL PODIUM AND TOWER A
500 WEST 33RD STREET
New York, NY

Client
Related Companies
60 Columbus Circle
New York, NY 10023
TEL: 212.801.1000 FAX: 212.801.1048

Oxford Properties Group
320 Park Avenue, 17th Floor
New York, NY 10022
TEL: 212.986.7514 FAX: 212.986.7510

Architect
Kohn Pedersen Fox Associates
11 West 42nd Street
New York, New York 10036
TEL: 212.977.6500 FAX: 212.956.2526

Structural Engineer
Thornton Tomasetti, Inc.
51 Madison Avenue
New York, New York 10010
TEL: 917.661.7800 FAX: 718.661.7801

Mechanical, Electrical, Plumbing, Fire Protection
Jaros Baum & Bolles Consulting Engineers
80 Pine Street
New York, NY 10013
TEL: 212.530.9300 FAX: 212.269.5894

Retail Interior Design & Planning
Elkus-Manfredi
300 A Street
Boston, MA 02210
TEL: 617.426.1300

No.	Description	Date
2	D.O.B. AMENDMENT #2	10/15/2016
1	D.O.B. BUILDING PERMIT FILING	12/10/2014

Key Plan

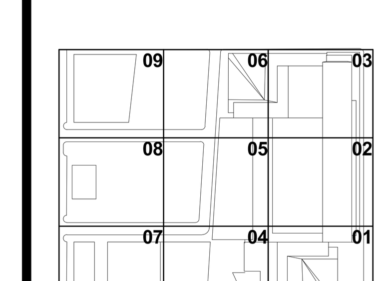

Issue Date: 12/10/2014
Project No. N11328.00
Drawn By Author
Sheet Number
HYE -TA -S8-2002

STATE OF NEW YORK MICHAEL J. SQUARZINI LICENSED PROFESSIONAL ENGINEER No. 080840

Drawing Title
SPECIAL CONCRETE WALL TYPICAL DETAILS

Drawing Number
S8-2002
B-Scan Drawing Number
S-972.01

© 2013 KOHN PEDERSEN FOX ASSOCIATES PC. All rights reserved.

S8-2002 SPECIAL CONCRETE WALL TYPICAL DETAILS
10/19/2016 10:50:11 AM P:\NY1\Projects\N11328.00\Drawings\Structural\Record\Issued\2016-10-16 - D.O.B. Amendment No.2\Revit - Rev. Removed\HYTA_S8-series.rvt

DEPT OF BLDGS 121186251 Job Number
ES871757984 Scan Code

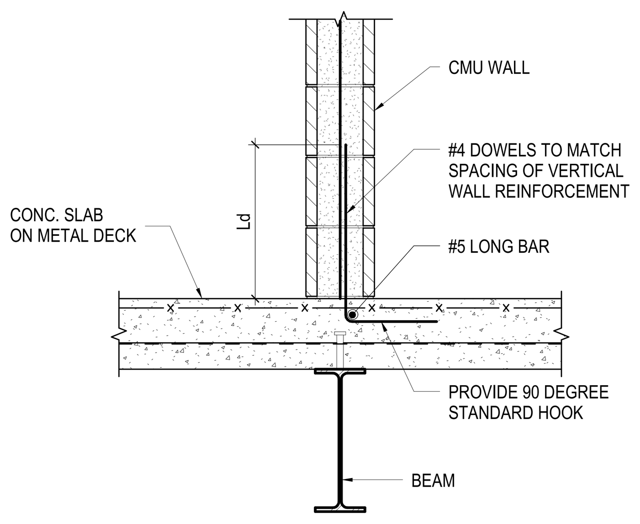

NOTE: SEE DETAIL 1A/S8-2003A FOR ALTERNATE POST-INSTALLED OPTION

1 TYPICAL CMU WALL BASE DETAIL AT SLAB ON METAL DECK
1" = 1'-0"

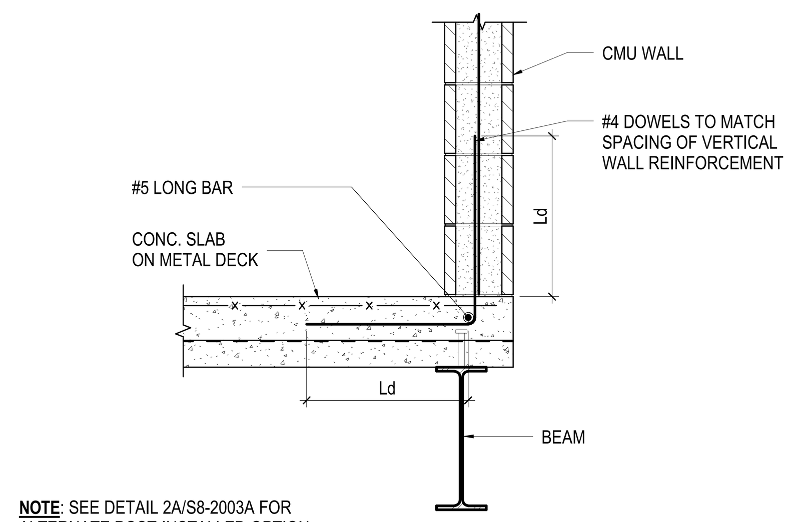

NOTE: SEE DETAIL 2A/S8-2003A FOR ALTERNATE POST-INSTALLED OPTION

2 TYPICAL CMU WALL BASE DETAIL AT SLAB ON METAL DECK - SHAFT CONDITION
1" = 1'-0"

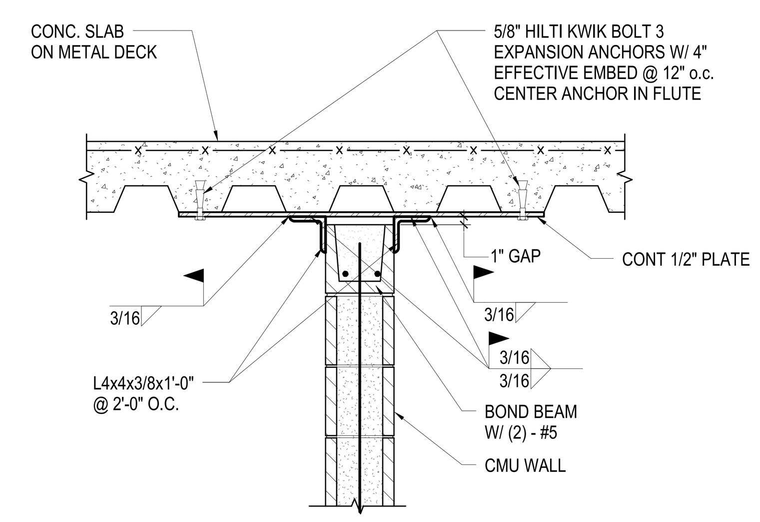

NOTE: SEE DETAIL 3A/S8-2003A FOR ALTERNATE DETAIL

3 TYPICAL CMU WALL TOP BRACE DETAIL AT SLAB ON METAL DECK - FLUTES PARALLEL
1" = 1'-0"

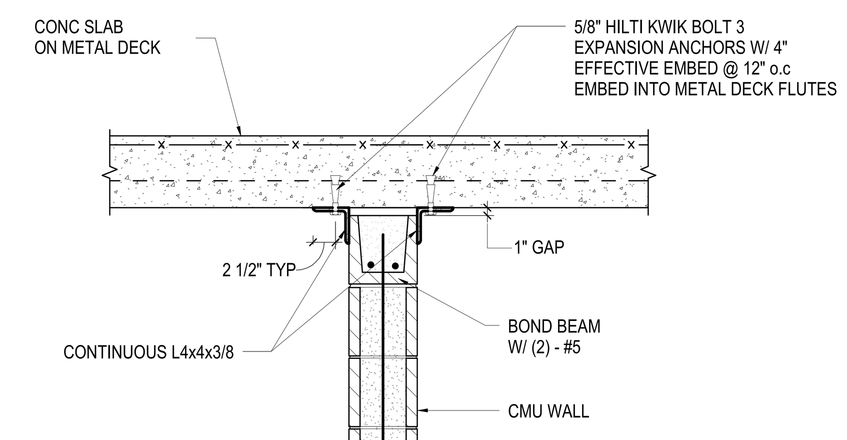

4 TYPICAL CMU WALL TOP BRACE DETAIL AT SLAB ON METAL DECK - FLUTES PERPENDICULAR
1" = 1'-0"

SHEET NOTES:

1. DETAIL 6/S8-2003 SHALL BE USED FOR CMU WALL TOP ANCHORAGE TO STEEL BEAM AT LOCATIONS WHERE THERE IS EITHER A SLAB OPENING ON ONE SIDE OF THE WALL OR NO ADJACENT SLAB OPENINGS U.O.N.
2. DETAIL 5/S8-2003 SHALL BE USED FOR CMU WALL TOP ANCHORAGE TO STEEL BEAM AT LOCATIONS WHERE THERE IS A SLAB OPENING ON BOTH SIDES OF THE WALL U.O.N.
3. DETAIL 7/S8-2003 SHALL BE USED IN PLACE OF DETAIL 6/S8-2003 ONLY WHEN SHAFT SIDE ACCESS TO FIELD WELDED ANGLE IS NOT AVAILABLE.
4. DETAIL 8/S8-2003 SHALL BE USED IN PLACE OF DETAIL 6/S8-2003 WHEN ALIGNMENT OF CMU WALL BELOW STEEL BEAM EXCEEDS THE OFFSET CONSTRAINTS SPECIFIED BY DETAIL 6/S8-2003.
5. DETAILS 3/S8-2003 OR 4/S8-2003 SHALL BE USED FOR CMU WALL TOP ANCHORAGES TO SLAB-ON-METAL DECK WHEN ALIGNMENT OF WALL DOES NOT PERMIT ANCHORAGE TO STEEL BEAM WITHIN DIMENSIONAL CONSTRAINTS PROVIDED FOR TYPICAL STEEL BEAM ANCHORAGE DETAILS.
6. DETAILS 9/S8-2003 OR 10/S8-2003 SHALL BE USED FOR CMU WALL TOP ANCHORAGES TO INTERMEDIATE SLAB DIAPHRAGMS WHERE PROVIDED OVER STAIR TRANSFERS AND BUILDING OPERATIONS ROOMS U.O.N.

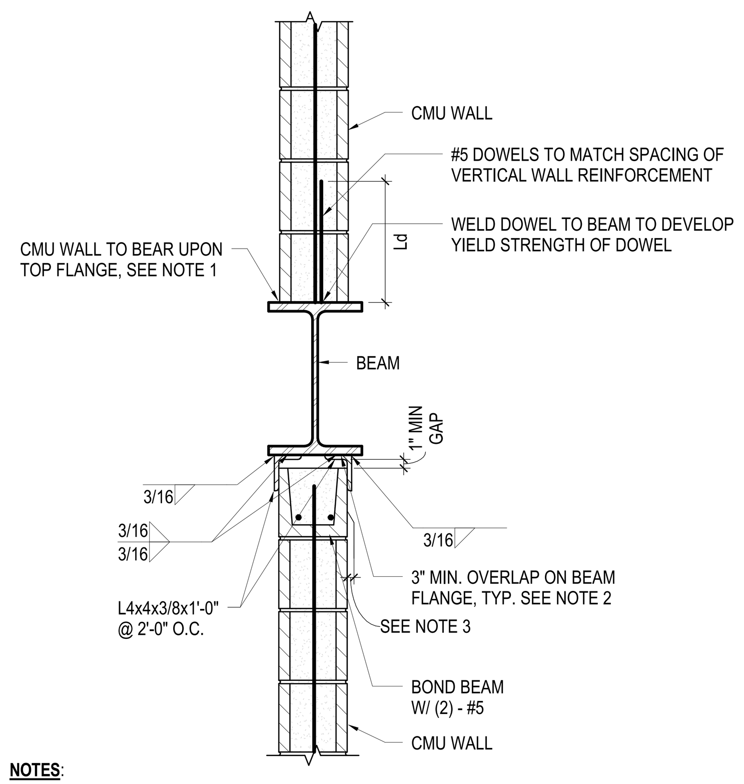

NOTES:

1. IF BEAM FLANGE WIDTH IS LESS THAN CMU WALL WIDTH PROVIDE PLATE AS SHOWN IN DETAIL 5A/S8-2003
2. IF BEAM FLANGE UNABLE TO ACCOMMODATE 3" OVERLAPS PROVIDE PLATE AS SHOWN IN DETAIL 5B/S8-2003
3. PROVIDE 1/4" GAP EA SIDE OF WALL FOR TOLERANCE AT SHOP WELDED ANGLES. FILL GAPS WITH MORTAR TO ACHIEVE FULL BEARING ON ANGLES. GAPS NOT TO EXCEED 1/2".

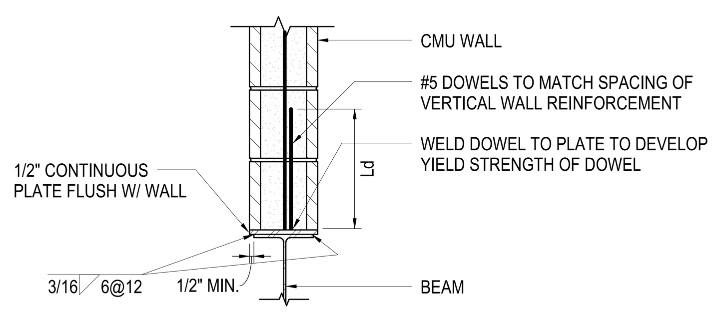

5A CMU WALL TO BEAM (PLATE OPTION)
1" = 1'-0"

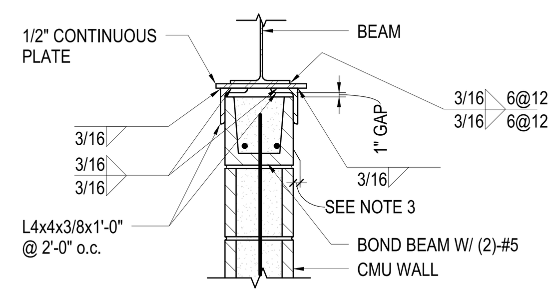

5B CMU WALL TO BEAM (PLATE OPTION)
1" = 1'-0"

5 TYPICAL CMU WALL ANCHORAGE DETAIL @ STL BEAM - SHAFT CONDITION
1" = 1'-0"

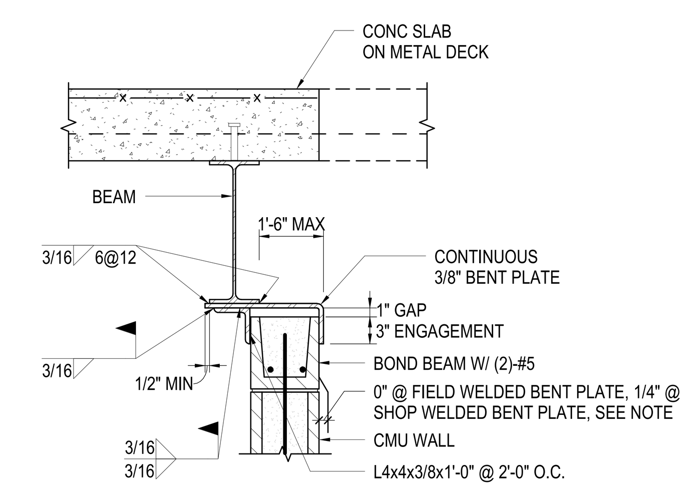

NOTE:

1. SIM GAP MAY BE PROVIDED AT ANGLE SIDE FOR TOLERANCE IF WELDED TO BENT PLATE PRIOR TO WALL CONSTRUCTION. FILL GAPS WITH MORTAR TO ACHIEVE FULL BEARING ON BENT PLATE / ANGLE. GAPS NOT TO EXCEED 1/2".
2. REFER TO DETAIL 6A/S8-2003A FOR ALTERNATE CMU WALL TOP BRACE DETAIL AT STEEL BEAM WITH OFFSET WALL.

6 TYPICAL CMU WALL TOP BRACE DETAIL AT STEEL BEAM
1" = 1'-0"

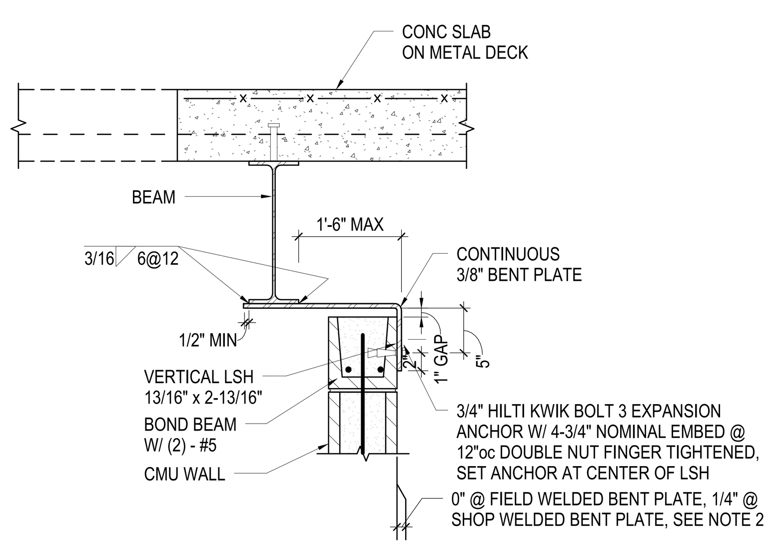

NOTES:

1. DETAIL APPLIES WHERE SHAFT SIDE ACCESS TO ANGLE IS NOT AVAILABLE.
2. FILL GAP WITH MORTAR TO ACHIEVE FULL BEARING ON BENT PLATE. GAP NOT TO EXCEED 1/2".

7 TYPICAL CMU WALL TOP BRACE DETAIL AT STEEL BEAM - SHAFT CONDITION
1" = 1'-0"

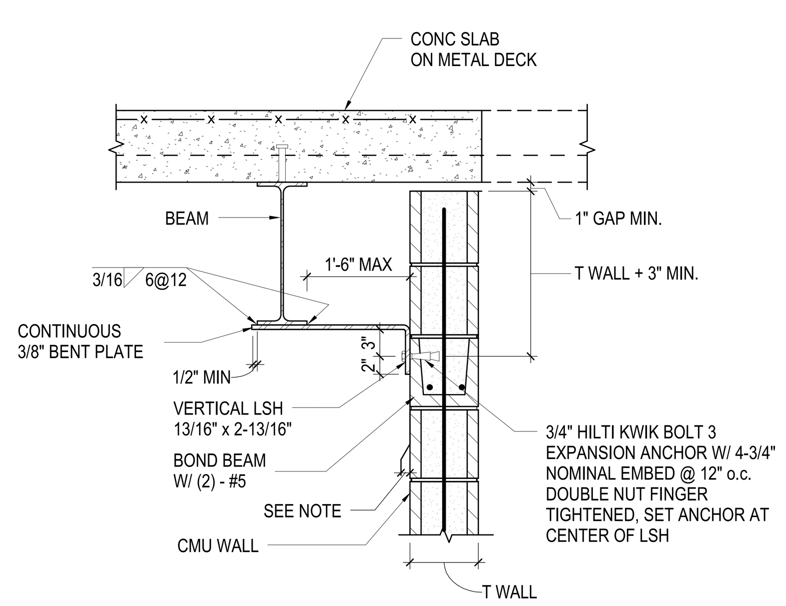

NOTE: PROVIDE 1/4" GAP FOR TOLERANCE AT SHOP WELDED BENT PLATE. FILL GAP WITH MORTAR TO ACHIEVE FULL BEARING ON BENT PLATE. GAP NOT TO EXCEED 1/2".

8 CMU WALL TO BEAM ABOVE
1" = 1'-0"

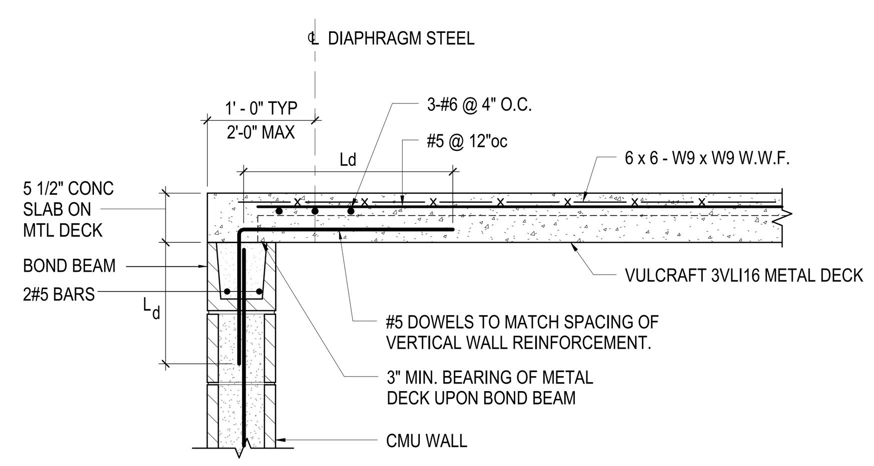

9 TYPICAL RAISED SLAB DIAPHRAGM DETAIL FOR CMU WALLS-METAL DECK PERPENDICULAR TO WALL
1" = 1'-0"

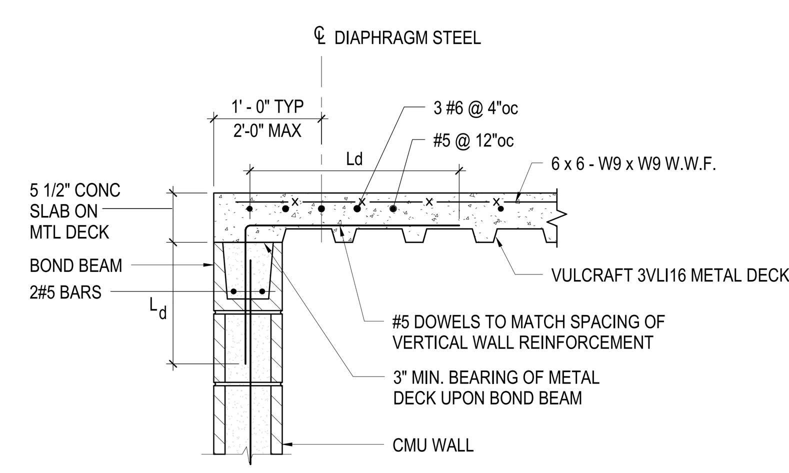

10 TYPICAL RAISED SLAB DIAPHRAGM DETAIL FOR CMU WALLS -METAL DECK PARALLEL TO WALL
1" = 1'-0"

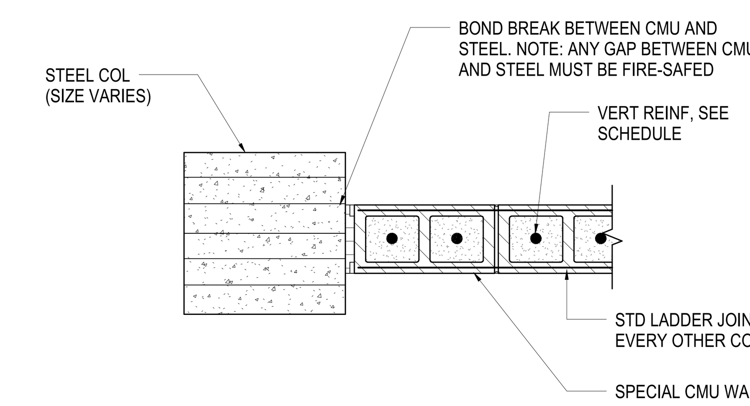

11 TYPICAL CMU WALL ABUTTING COLUMN
1" = 1'-0"

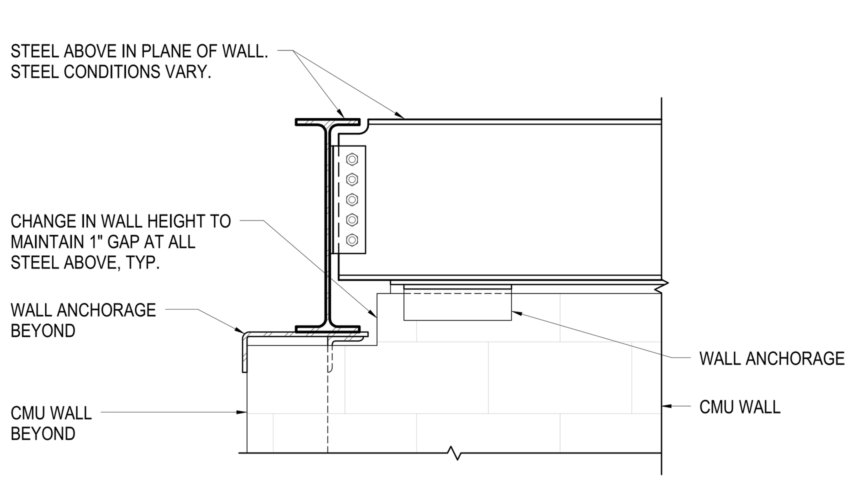

NOTE: SEE TYPICAL CMU WALL DETAILS FOR INFORMATION NOT SHOWN.

12 TYPICAL CMU WALL VERTICAL SEPARATION DETAIL @ CORNER - CHANGE IN STEEL DEPTH
1" = 1'-0"

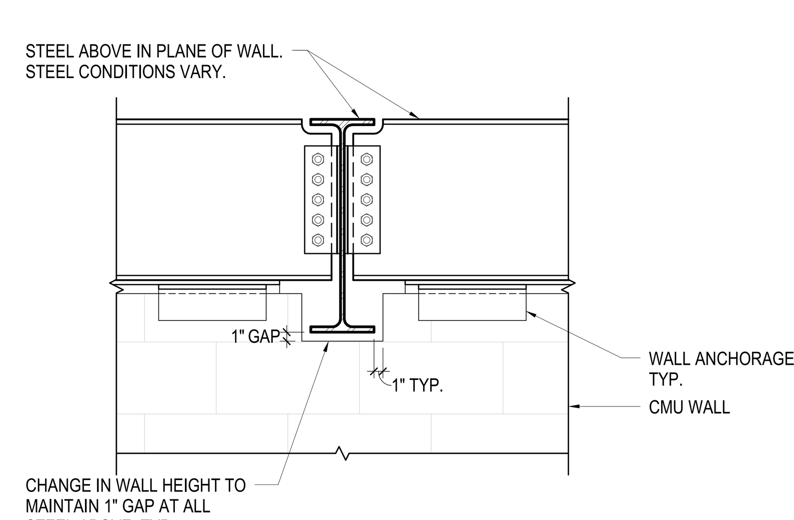

NOTE: SEE TYPICAL CMU WALL DETAILS FOR INFORMATION NOT SHOWN.

13 TYPICAL CMU WALL VERTICAL SEPARATION DETAIL FROM STEEL ABOVE
1" = 1'-0"

HUDSON YARDS - RETAIL PODIUM AND TOWER A
500 WEST 33RD STREET
New York, NY

Client
Related Companies
60 Columbus Circle
New York, NY 10023
TEL: 212.801.1000 FAX: 212.801.1048

Oxford Properties Group
320 Park Avenue, 17th Floor
New York, NY 10022
TEL: 212.986.7514 FAX: 212.986.7510

Architect
Kohn Pedersen Fox Associates
11 West 42nd Street
New York, New York 10036
TEL: 212.977.6500 FAX: 212.956.2526

Structural Engineer
Thornton Tomasetti, Inc.
51 Madison Avenue
New York, New York 10010
TEL: 917.661.7800 FAX: 718.661.7801

Mechanical, Electrical, Plumbing, Fire Protection
Jaros Baum & Bolles Consulting Engineers
80 Pine Street
New York, NY 10013
TEL: 212.530.9300 FAX: 212.269.5894

Retail Interior Design & Planning
Elkus-Manfredi
300 A Street
Boston, MA 02210
TEL: 617.426.1300

No.	Description	Date
2	D.O.B. AMENDMENT #2	10/15/2016
1	D.O.B. BUILDING PERMIT FILING	12/10/2014

Key Plan

Issue Date: 12/10/2014
Project No. N11328.00
Drawn By
Sheet Number

STATE OF NEW YORK · MICHAEL J. SQUARZINI · LICENSED PROFESSIONAL ENGINEER · No. 080340

HYE -TA -S8-2003

Drawing Title
SPECIAL MASONRY WALL TYPICAL DETAILS

Damian Titus
Buildings
APPROVED
Under Directive 2 of 1975
AMENDED APPLICATION
Date: 05/03/2017
NYC Development Hub

Drawing Number
S8-2003
B-Scan Drawing Number
S-973.01
SHEET 424 OF 443

© 2013 KOHN PEDERSEN FOX ASSOCIATES PC. All rights reserved.

S8-2003
10/19/2016 10:50:18 AM
SPECIAL MASONRY WALL TYPICAL DETAILS
P:\NY1\Projects\N11328.00\Drawings\Structural\Record\Issued\2016-10-16 - D.O.B. Amendment No.2\Revit - Rev. Removed\HYTA_S8-series.rvt

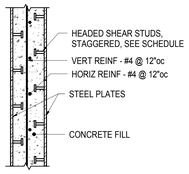

NOTE:
SEE DETAIL 3/S8-2005 FOR TYPICAL STEEL SANDWICH PLATE WALL ELEVATION SHOWING WELDED SPLICE LOCATIONS

STEEL SANDWICH PLATE WALL HEADED SHEAR STUDS				
PLATE THICKNESS (IN)	DIAMETER (IN)	LENGTH (IN)	VERTICAL SPACING (IN)	HORIZONTAL SPACING (IN)
1/2	3/4	4	10	12
3/4	3/4	4	10	10
7/8	3/4	4	8	8
1	1	4	8	8

1 TYPICAL STEEL SANDWICH PLATE WALL DETAIL
1" = 1'-0"

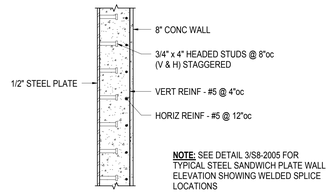

NOTE: SEE DETAIL 3/S8-2005 FOR TYPICAL STEEL SANDWICH PLATE WALL ELEVATION SHOWING WELDED SPLICE LOCATIONS

2 8 1/2" STEEL SANDWICH PLATE WALL WITH ONE PLATE
1" = 1'-0"

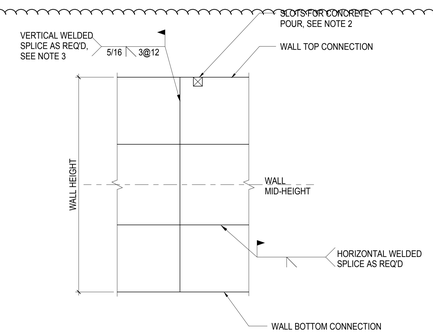

NOTES:
1. WELDS ARE APPLICABLE FOR ALL STEEL PLATE THICKNESSES.
2. MAX. 6" SLOTS @ TOP OF STEEL PLATE MAY BE CUT TO ACCOMMODATE CONCRETE POUR. SPACE SLOTS @ 2'-0" MIN.
3. VERTICAL WELDED SPLICE FOR 6" STEEL SANDWICH PLATE WALL ON LEVEL 00 SHALL BE 5/16 PJP SPACED 6@12.

3 TYPICAL STEEL SANDWICH PLATE WALL ELEVATION
1/4" = 1'-0"

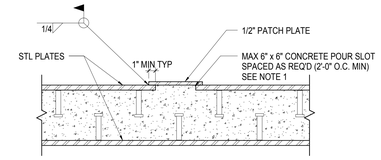

NOTES:
1. CONCRETE POUR SLOT SHALL NOT INTERRUPT MORE THAN ONE HEADED STUD.
2. DETAIL ALSO APPLIES TO STEEL PLATE SLAB TYPE S11 ON LEVEL 00.

4 TYPICAL PATCH PLATE DETAIL FOR CONCRETE POUR SLOTS IN STEEL PLATE WALLS/SLABS
1 1/2" = 1'-0"

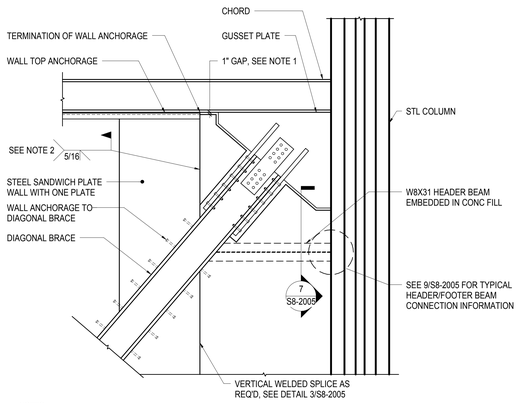

NOTES:
1. GAP APPLIES TO BOTH 8" CONCRETE WALL AND 1/2" PLATE. IN LOCATIONS BORDERING BOLTED FLANGE PLATES, GAP SHALL APPLY TO 1/2" PLATE ONLY.
2. ALL WELDS SHOWN MAY ALTERNATIVELY BE SHOP WELDED.

5 TYPICAL STEEL SANDWICH PLATE WALL WITH ONE PLATE @ TOP GUSSET PLATE - ELEVATION
1/2" = 1'-0"

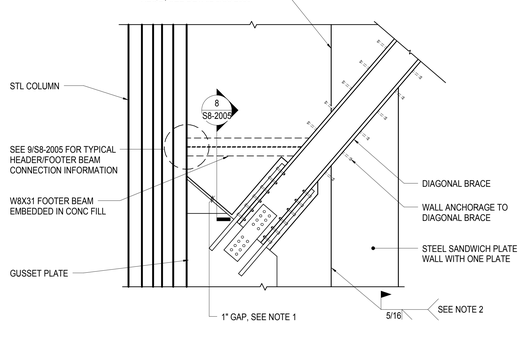

NOTES:
1. GAP APPLIES TO BOTH 8" CONCRETE WALL AND 1/2" PLATE. IN LOCATIONS BORDERING BOLTED FLANGE PLATES, GAP SHALL APPLY TO 1/2" PLATE ONLY.
2. ALL WELDS SHOWN MAY ALTERNATIVELY BE SHOP WELDED.

6 TYPICAL STEEL SANDWICH PLATE WALL WITH ONE PLATE @ BOTTOM GUSSET PLATE - ELEVATION
1/2" = 1'-0"

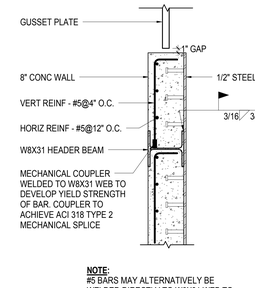

NOTE:
#5 BARS MAY ALTERNATIVELY BE WELDED DIRECTLY TO W8X31 WEB TO DEVELOP YIELD STRENGTH OF BARS.

7 SECTION
1" = 1'-0"

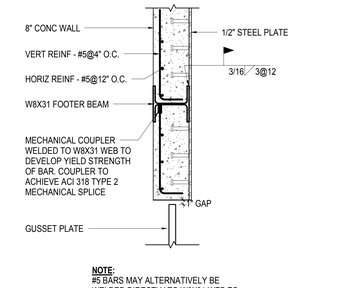

NOTE:
#5 BARS MAY ALTERNATIVELY BE WELDED DIRECTLY TO W8X31 WEB TO DEVELOP YIELD STRENGTH OF BARS.

8 SECTION
1" = 1'-0"

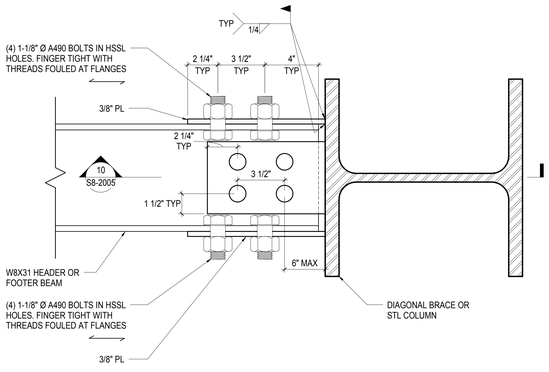

NOTES:
1. STEEL SANDWICH PLATE WALL WITH ONE PLATE NOT SHOWN FOR CLARITY.
2. ALL WELDS SHOWN MAY ALTERNATIVELY BE SHOP WELDED.

9 TYPICAL HEADER/FOOTER BEAM CONNECTION TO DIAGONAL BRACE/COLUMN - PLAN
3" = 1'-0"

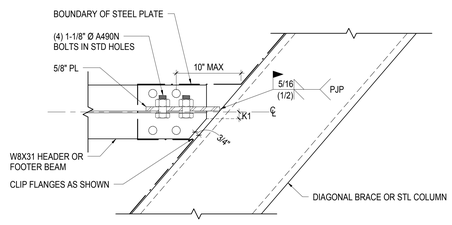

NOTE:
ALL WELDS SHOWN MAY ALTERNATIVELY BE SHOP WELDED.

10 SECTION
1 1/2" = 1'-0"

Client
Related Companies
60 Columbus Circle
New York, NY 10023
TEL: 212.801.1000 FAX: 212.801.1048

Oxford Properties Group
320 Park Avenue, 17th Floor
New York, NY 10022
TEL: 212.986.7514 FAX: 212.986.7510

Architect
Kohn Pedersen Fox Associates
11 West 42nd Street
New York, New York 10036
TEL: 212.977.6500 FAX: 212.956.2526

Structural Engineer
Thornton Tomasetti, Inc.
51 Madison Avenue
New York, New York 10010
TEL: 917.661.7800 FAX: 718.661.7801

Mechanical, Electrical, Plumbing, Fire Protection
Jaros Baum & Bolles Consulting Engineers
80 Pine Street
New York, NY 10013
TEL: 212.530.9300 FAX: 212.269.5894

Retail Interior Design & Planning
Elkus-Manfredi
300 A Street
Boston, MA 02210
TEL: 617.426.1300

No.	Description	Date
2	D.O.B. AMENDMENT #2	10/15/2016
1	D.O.B. BUILDING PERMIT FILING	12/10/2014

Key Plan

Issue Date: 12/10/2014
Project No. N11328.00
Drawn By:
Sheet Number

HYE -TA -S8-2005
Drawing Title

STEEL PLATE WALL TYPICAL DETAILS

Drawing Number
S8-2005
A-Scan Drawing Number
S-974.01

SHEET 426 OF 443

Damian Titus
Buildings
APPROVED
Under Directive 2 of 1975
AMENDED APPLICATION
Date: 05/01/2017
NYC Development Hub

© 2013 KOHN PEDERSEN FOX ASSOCIATES PC. All rights reserved.

S8-2005
10/19/2016 10:50:23 AM
STEEL PLATE WALL TYPICAL DETAILS
P:\NYP\Projects\N11328.00\Drawings\Structural\Record\Issued\2016-10-16 - D.O.B. Amendment No.2\Revit - Rev. Removed\HYTA_S8-series.rvt

DEPT OF BUILDINGS 421490525 Job Number
ES0345437I Scan Code

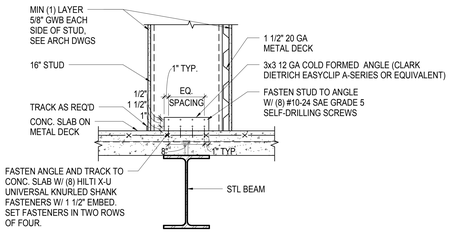

1 TYPICAL 16" STUD WALL BASE DETAIL AT SLAB ON METAL DECK
1" = 1'-0"

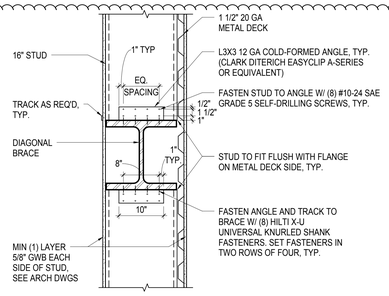

2 TYPICAL 16" STUD WALL BASE DETAIL AT DIAGONAL BRACE
1" = 1'-0"

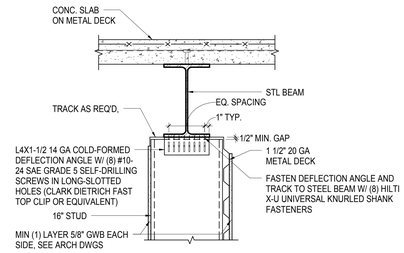

3 TYPICAL 16" STUD WALL TOP BRACE DETAIL AT STEEL BEAM
1" = 1'-0"

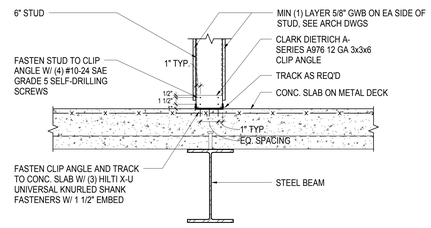

NOTE: FOR SLAB-TO-SHAFT CONDITIONS WHERE SHAFT SIDE ACCESS IS NOT AVAILABLE TO ATTACH GWB, ATTACH MIN (2) LAYERS OF GWB TO SLAB SIDE OF STUD

4 TYPICAL 6" STUD WALL BASE DETAIL AT SLAB ON METAL DECK
1" = 1'-0"

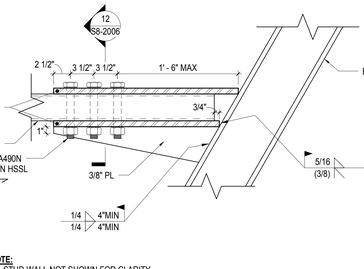

NOTE: FOR SLAB-TO-SHAFT CONDITIONS WHERE SHAFT SIDE ACCESS IS NOT AVAILABLE TO ATTACH GWB, ATTACH MIN (2) LAYERS OF GWB TO SLAB SIDE OF STUD

5 TYPICAL 6" STUD WALL BRACE DETAIL AT DIAGONAL BRACE
1" = 1'-0"

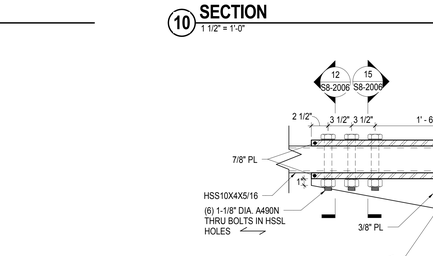

NOTE: FOR SLAB-TO-SHAFT CONDITIONS WHERE SHAFT SIDE ACCESS IS NOT AVAILABLE TO ATTACH GWB, ATTACH MIN (2) LAYERS OF GWB TO SLAB SIDE OF STUD

6 TYPICAL 6" STUD WALL TOP BRACE DETAIL AT STEEL BEAM
1" = 1'-0"

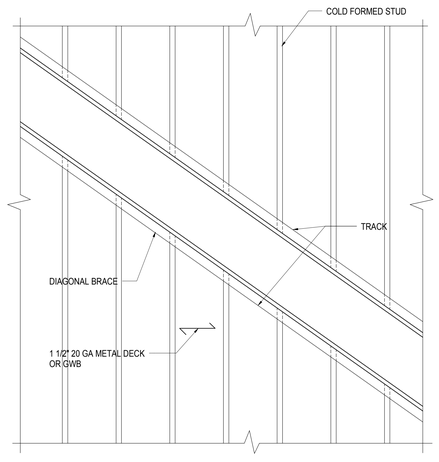

7 TYPICAL STUD WALL ELEVATION AT DIAGONAL BRACE
1" = 1'-0"

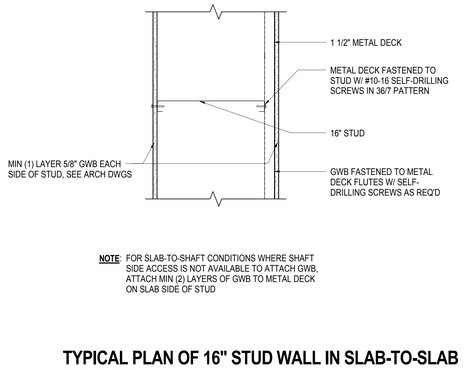

NOTE: FOR SLAB-TO-SHAFT CONDITIONS WHERE SHAFT SIDE ACCESS IS NOT AVAILABLE TO ATTACH GWB, ATTACH MIN (2) LAYERS OF GWB TO METAL DECK ON SLAB SIDE OF STUD

8 TYPICAL PLAN OF 16" STUD WALL IN SLAB-TO-SLAB CONDITION
1 1/2" = 1'-0"

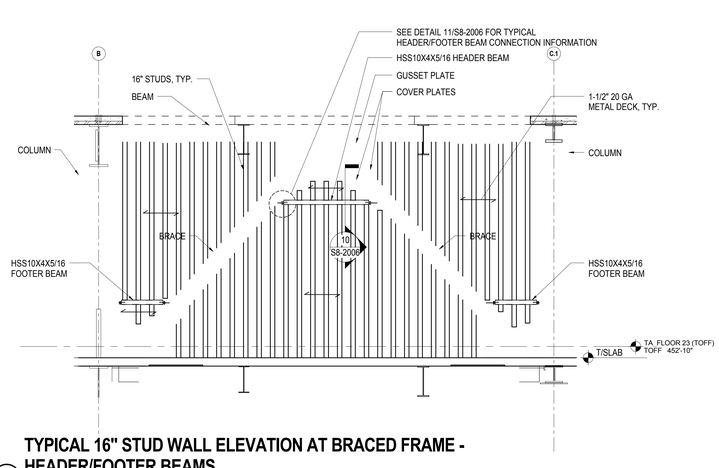

9 TYPICAL 16" STUD WALL ELEVATION AT BRACED FRAME - HEADER/FOOTER BEAMS
1/4" = 1'-0"

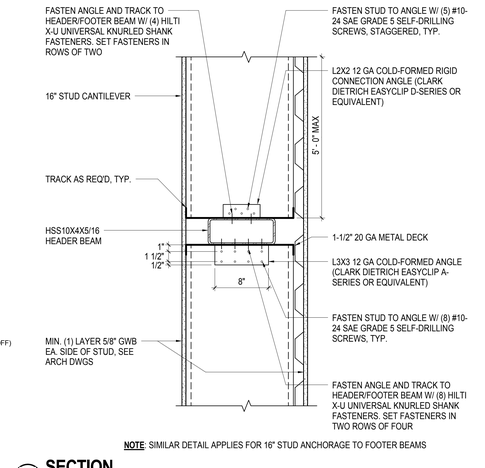

NOTE: SIMILAR DETAIL APPLIES FOR 16" STUD ANCHORAGE TO FOOTER BEAMS

10 SECTION
1 1/2" = 1'-0"

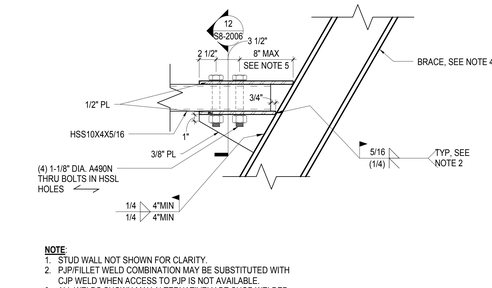

NOTE:
1. STUD WALL NOT SHOWN FOR CLARITY.
2. PJP/FILLET WELD COMBINATION MAY BE SUBSTITUTED WITH CJP WELD WHEN ACCESS TO PJP IS NOT AVAILABLE.
3. ALL WELDS SHOWN MAY ALTERNATIVELY BE SHOP WELDED.
4. DETAIL ALSO APPLIES FOR HEADER/FOOTER BEAM CONNECTION TO COLUMNS.
5. SEE ALTERNATIVE DETAIL 13/S8-2006 IF DIMENSIONS EXCEED 8".

11 TYPICAL HEADER/FOOTER BEAM CONNECTION TO DIAGONAL BRACE/COLUMN
1 1/2" = 1'-0"

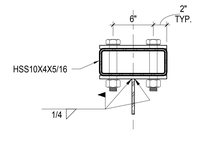

12 SECTION
1 1/2" = 1'-0"

NOTE:
1. STUD WALL NOT SHOWN FOR CLARITY.
2. PJP/FILLET WELD COMBINATION MAY BE SUBSTITUTED WITH CJP WELD WHEN ACCESS TO PJP IS NOT AVAILABLE.
3. ALL WELDS SHOWN MAY ALTERNATIVELY BE SHOP WELDED

13 ALTERNATIVE HEADER/FOOTER BEAM CONNECTION TO DIAGONAL BRACE
1 1/2" = 1'-0"

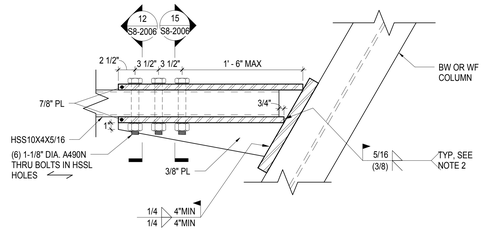

NOTE:
1. STUD WALL NOT SHOWN FOR CLARITY.
2. PJP/FILLET WELD COMBINATION MAY BE SUBSTITUTED WITH CJP WELD WHEN ACCESS TO PJP IS NOT AVAILABLE.
3. ALL WELDS SHOWN MAY ALTERNATIVELY BE SHOP WELDED

14 ALTERNATIVE HEADER/FOOTER BEAM CONNECTION TO COLUMN
1 1/2" = 1'-0"

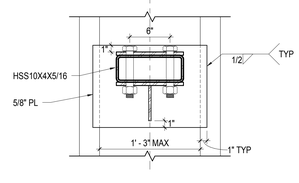

15 SECTION
1 1/2" = 1'-0"

Damian Titus
Buildings
APPROVED
Under Directive 2 of 1975
AMENDED APPLICATION
Date: 05/03/2017
NYC Development Hub

HUDSON YARDS - RETAIL PODIUM AND TOWER A

500 WEST 33RD STREET
New York, NY

Client
Related Companies
60 Columbus Circle
New York, NY 10023
TEL: 212.801.1000 FAX: 212.801.1048

Oxford Properties Group
320 Park Avenue, 17th Floor
New York, NY 10022
TEL: 212.986.7514 FAX: 212.986.7510

Architect
Kohn Pedersen Fox Associates
11 West 42nd Street
New York, New York 10036
TEL: 212.977.6500 FAX: 212.956.2526

Structural Engineer
Thornton Tomasetti, Inc.
51 Madison Avenue
New York, New York 10010
TEL: 917.661.7800 FAX: 718.661.7801

Mechanical, Electrical, Plumbing, Fire Protection
Jaros Baum & Bolles Consulting Engineers
80 Pine Street
New York, NY 10013
TEL: 212.530.9300 FAX: 212.269.5894

Retail Interior Design & Planning
Elkus-Manfredi
300 A Street
Boston, MA 02210
TEL: 617.426.1300

No.	Description	Date
2	D.O.B. AMENDMENT #2	10/15/2016
1	D.O.B. BUILDING PERMIT FILING	12/10/2014

Key Plan

Issue Date: 12/10/2014
Project No. N11328.00
Drawn By
Sheet Number

HYE -TA -S8-2006
Drawing Title

SPECIAL COLD FORMED STEEL STUD WALL TYPICAL DETAILS

Drawing Number
S8-2006
Rckan Drawing Number
S-975.01

© 2013 KOHN PEDERSEN FOX ASSOCIATES PC. All rights reserved.

S8-2006
10/19/2016 11:24:40 AM
SPECIAL COLD FORMED STEEL STUD WALL TYPICAL
P:\RFA\Projects\N11328.00\Drawings\Structural\Record\Issued\2016-10-16 - D.O.B. Amendment No.2\Revit - Rev. Removed\HYTA_S8-series.rvt

DEPT OF BUILDINGS 421390253 Job Number
B1 421390253 Scan Code

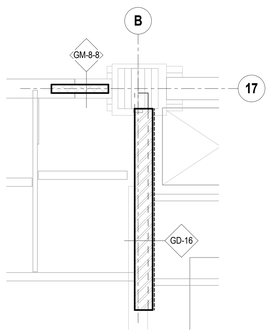

1 PART PLAN - SHAFT AT GRID B-17 - TYP LEVEL 10 - 20
1/4" = 1'-0"

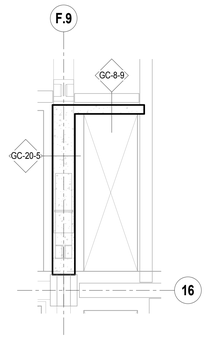

2 PART PLAN - SHAFT AT GRID F.9-16 - LEVEL 03
1/4" = 1'-0"

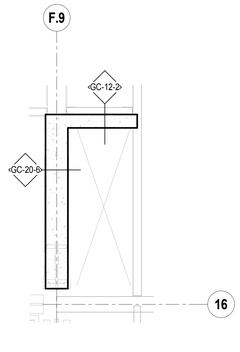

3 PART PLAN - SHAFT AT GRID F.9-16 - LEVEL 04
1/4" = 1'-0"

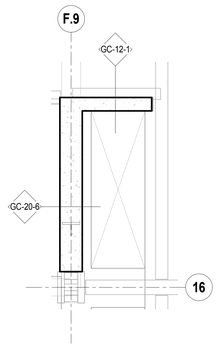

4 PART PLAN - SHAFT AT GRID F.9-16 - LEVEL 05
1/4" = 1'-0"

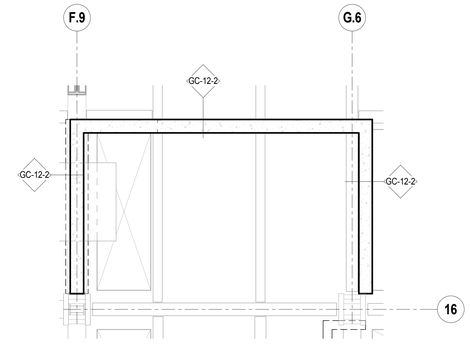

5 PART PLAN - SHAFT AT GRID F.9-16 - LEVEL 06-06U
1/4" = 1'-0"

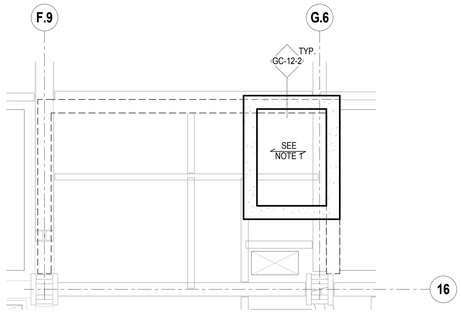

NOTES:
1. TOP OF SHAFT LID SHALL BE LOCATED AT T/SLAB EL. 179' - 0"
2. BOND BREAKS SHALL NOT APPLY TO THESE SPECIAL CONCRETE WALLS. SEE DETAIL 7/S8-2002 FOR TYPICAL REINFORCEMENT ARRANGEMENT DETAILS.

6 PART PLAN - SHAFT AT GRID F.9-16 - LEVEL 08
1/4" = 1'-0"

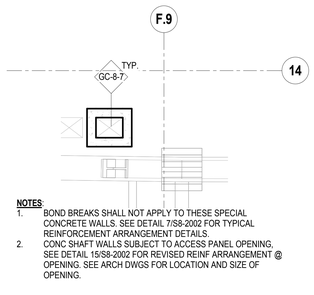

NOTES:
1. BOND BREAKS SHALL NOT APPLY TO THESE SPECIAL CONCRETE WALLS. SEE DETAIL 7/S8-2002 FOR TYPICAL REINFORCEMENT ARRANGEMENT DETAILS.
2. CONC SHAFT WALLS SUBJECT TO ACCESS PANEL OPENING, SEE DETAIL 15/S8-2002 FOR REVISED REINF ARRANGEMENT @ OPENING. SEE ARCH DWGS FOR LOCATION AND SIZE OF OPENING.

7 PART PLAN - SHAFT AT GRID F.9-14 - LEVELS 01-05
1/4" = 1'-0"

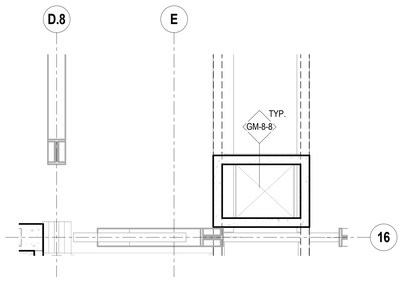

8 PART PLAN - SHAFT AT GRID D.8-16 - LEVEL 9U
1/4" = 1'-0"

HUDSON YARDS - RETAIL PODIUM AND TOWER A
500 WEST 33RD STREET
New York, NY

Client
Related Companies
60 Columbus Circle
New York, NY 10023
TEL: 212.801.1000 FAX: 212.801.1048

Oxford Properties Group
320 Park Avenue, 17th Floor
New York, NY 10022
TEL: 212.986.7514 FAX: 212.986.7510

Architect
Kohn Pedersen Fox Associates
11 West 42nd Street
New York, New York 10036
TEL: 212.977.6500 FAX: 212.956.2526

Structural Engineer
Thornton Tomasetti, Inc.
51 Madison Avenue
New York, New York 10010
TEL: 917.661.7800 FAX: 718.661.7801

Mechanical, Electrical, Plumbing, Fire Protection
Jaros Baum & Bolles Consulting Engineers
80 Pine Street
New York, NY 10013
TEL: 212.530.9300 FAX: 212.269.5894

Retail Interior Design & Planning
Elkus-Manfredi
300 A Street
Boston, MA 02210
TEL: 617.426.1300

No.	Description	Date
1	D.O.B. AMENDMENT #2	10/15/2016

Key Plan

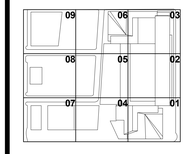

Issue Date: 10/15/2016
Project No. N11328.00
Drawn By Author
Sheet Number

HYE -TA -S8-1202
Drawing Title

SHAFT WALL PART PLANS

Drawing Number
S8-1202
Schaan Drawing Number
S-976.00

SHEET 419 OF 443

Damian Titus
Buildings
APPROVED
Under Directive 2 of 1975
AMENDED APPLICATION
Date: 05/03/2017
NYC Development Hub

0 4' 8' 16'

N

© 2013 KOHN PEDERSEN FOX ASSOCIATES PC. All rights reserved

S8-1202
10/19/2016 10:49:58 AM
SHAFT WALL PART PLANS
P:\NY\Projects\N11328.00\Drawings\Structural\Record\Issued\2016-10-16 - D.O.B. Amendment No.2\Revit - Rev. Removed\HYTA_S8-series.rvt

DEPT OF BUILDINGS ATTACHED Job Number
E5417900M0 Scan Code

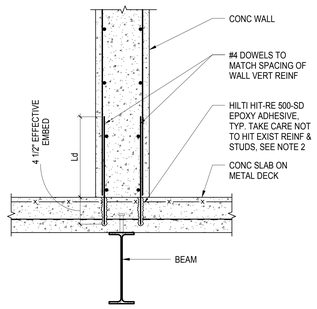

NOTES:
1. SEE DETAIL 1/S8-2001 FOR INFORMATION NOT SHOWN
2. SURVEY OF METAL DECK FLUTES IS RECD PRIOR TO DOWEL INSTALLATION TO ENSURE EFFECTIVE EMBEDMENT LENGTH IS MET FOR THE DOWELS

1A ALTERNATE CONCRETE WALL BASE DETAIL AT SLAB ON METAL DECK - POST INSTALLED OPTION
1" = 1'-0"

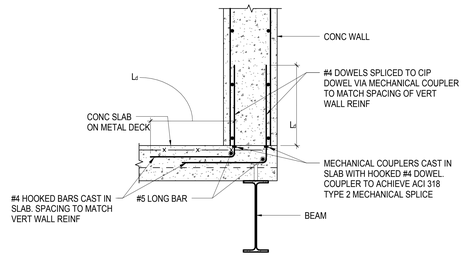

2A ALTERNATE CONCRETE WALL BASE DETAIL AT SLAB ON METAL DECK - POST-INSTALLED OPTION - SHAFT CONDITION
1" = 1'-0"

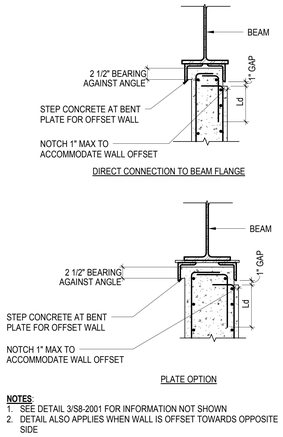

NOTES:
1. SEE DETAIL 3/S8-2001 FOR INFORMATION NOT SHOWN
2. DETAIL ALSO APPLIES WHEN WALL IS OFFSET TOWARDS OPPOSITE SIDE

3A ALTERNATE CONCRETE WALL ACHORAGE DETAIL AT STEEL BEAM - SHAFT CONDITION W/ WALL OFFSET
1" = 1'-0"

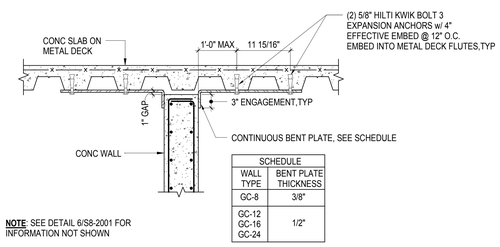

SCHEDULE	
WALL TYPE	BENT PLATE THICKNESS
GC-8	3/8"
GC-12 GC-16 GC-24	1/2"

NOTE: SEE DETAIL 6/S8-2001 FOR INFORMATION NOT SHOWN

6A ALTERNATE CONCRETE WALL TOP BRACE DETAIL AT SLAB ON METAL DECK - FLUTES PARALLEL
1" = 1'-0"

NOTES:
1. SEE DETAIL 8/S8-2001 FOR INFORMATION NOT SHOWN
2. USE SIMILAR APPROACH WHEN WALL IS OFFSET TOWARDS ANGLE.
3. PROVIDE MODIFIED WELD CONFIGURATION SHOWN HERE AND MODIFIED ANGLE SIZE/SPACING SHOWN IN SCHEDULE INSTEAD OF THAT ON 8/S8-2001 WHEN ANGLES ARE WELDED TO BENT PLATE PRIOR TO WALL CONSTRUCTION.

SCHEDULE	
WALL TYPE	ANGLE O.C. SPACING
GC-8	4'-0"
GC-12 GC-16 GC-24	2'-6"

8A ALTERNATE CONCRETE WALL BRACE DETAIL AT STEEL BEAM - WALL OFFSET CONDITION
1" = 1'-0"

NOTE: SEE DETAIL 9/S8-2001 FOR INFORMATION NOT SHOWN

9A ALTERNATE CONCRETE WALL BRACE DETAIL AT STEEL BEAM - SHAFT CONDITION W/ WALL OFFSET
1" = 1'-0"

NOTES:
SEE DETAIL 9/S8-2001 FOR INFORMATION NOT SHOWN

9B ALTERNATE CONCRETE WALL BRACE DETAIL AT STEEL BEAM - SHAFT CONDITION W/ WALL OFFSET
1" = 1'-0"

NOTE: SEE DETAIL 10/S8-2001 FOR INFORMATION NOT SHOWN

10A ALTERNATE CONCRETE WALL TOP BRACE DETAIL AT STEEL BEAM - OFFSET CONDITION W/ WALL OFFSET
1" = 1'-0"

NOTE: SEE DETAIL 10/S8-2001 FOR INFORMATION NOT SHOWN

10B ALTERNATE CONCRETE WALL TOP BRACE DETAIL AT STEEL BEAM - OFFSET CONDITION W/ WALL OFFSET
1" = 1'-0"

NOTES:
1. DETAIL APPLIES WHEN CONC WALL ENCASES DIAGONAL BRACES
2. SEE TYPICAL CONC WALL DETAILS FOR INFORMATION NOT SHOWN

16A CONCRETE WALL @ GUSSET PLATE - WITH ENCASEMENT
1" = 1'-0"

17A SECTION
1" = 1'-0"

NOTE: SEE TYPICAL CONC WALL DETAILS FOR INFORMATION NOT SHOWN.

18A TYPICAL CONCRETE WALL VERTICAL SEPARATION DETAIL @ CORNER - CHANGE IN STEEL DEPTH
1" = 1'-0"

NOTE: SEE TYPICAL CONC WALL DETAILS FOR INFORMATION NOT SHOWN.

19A TYPICAL CONCRETE WALL VERTICAL SEPARATION DETAIL FROM STEEL ABOVE
1" = 1'-0"

Damian Titus
APPROVED
Under Directive 2 of 1975
AMENDED APPLICATION
Date: 09/07/2017
NYC Development Hub

0 4' 8' 16'

N

HUDSON YARDS - RETAIL PODIUM AND TOWER A
500 WEST 33RD STREET
New York, NY

Client
Related Companies
60 Columbus Circle
New York, NY 10023
TEL: 212.801.1000 FAX: 212.801.1048

Oxford Properties Group
320 Park Avenue, 17th Floor
New York, NY 10022
TEL: 212.986.7514 FAX: 212.986.7510

Architect
Kohn Pedersen Fox Associates
11 West 42nd Street
New York, New York 10036
TEL: 212.977.6500 FAX: 212.956.2526

Structural Engineer
Thornton Tomasetti, Inc.
51 Madison Avenue
New York, New York 10010
TEL: 917.661.7800 FAX: 718.661.7801

Mechanical, Electrical, Plumbing, Fire Protection
Jaros Baum & Bolles Consulting Engineers
80 Pine Street
New York, NY 10013
TEL: 212.530.9300 FAX: 212.269.5894

Retail Interior Design & Planning
Elkus-Manfredi
300 A Street
Boston, MA 02210
TEL: 617.426.1300

No.	Description	Date
1	D.O.B. AMENDMENT #2	10/15/2016

Key Plan

09 06 03
08 05 02
07 04 01

Issue Date: 10/15/2016
Project No. N11328.00
Drawn By Author
Sheet Number

HYE -TA -S8-2001A
Drawing Title

SPECIAL CONCRETE WALL ALTERNATE DETAILS

Drawing Number
S8-2001A
B-Scan Drawing Number
S-977.00

S8-2001A
10/19/2016 10:50:08 AM
SPECIAL CONCRETE WALL ALTERNATE DETAILS
P:\NY\Projects\N11328.00\Drawings\Structural\Record\Issued\2016-10-16 - D.O.B. Amendment No.2\Revit - Rev. Removed\HYTA_S8-series.rvt

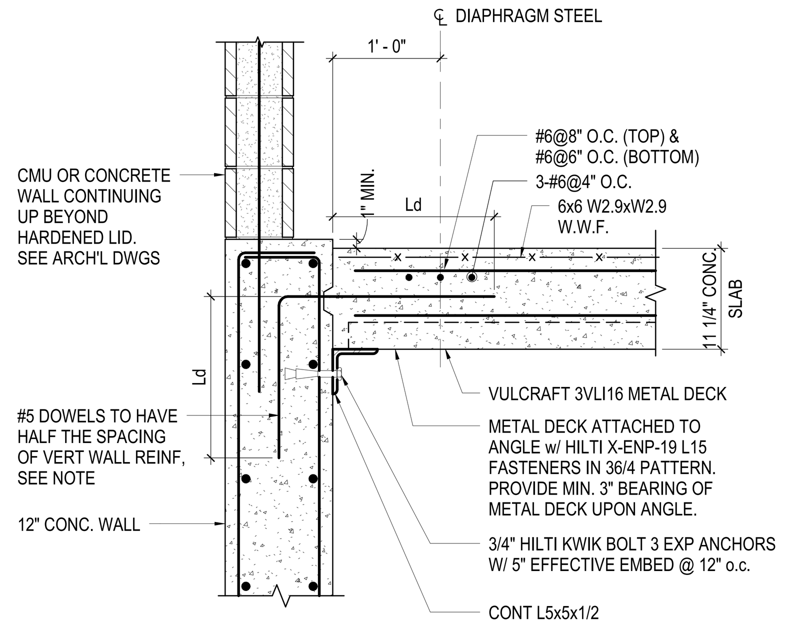

NOTE:
#5 DOWELS MAY ALTERNATIVELY BE ANCHORED INTO CONCRETE WALL: DRILL & EPOXY WITH HILTI HIT-RE 500-SD EPOXY ADHESIVE OR APPROVED EQUAL. TAKE CARE NOT TO HIT EXISTING WALL REINFORCEMENT. PROVIDE 7-1/2" EFFECTIVE EMBEDMENT INTO WALL.

1 SECTION
1" = 1'-0"

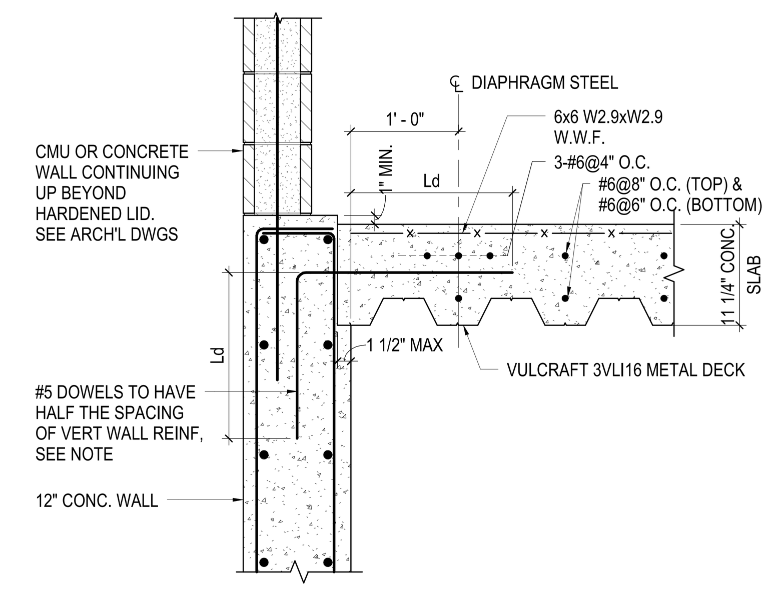

NOTE:
#5 DOWELS MAY ALTERNATIVELY BE ANCHORED INTO CONCRETE WALL: DRILL & EPOXY WITH HILTI HIT-RE 500-SD EPOXY ADHESIVE OR APPROVED EQUAL. TAKE CARE NOT TO HIT EXISTING WALL REINFORCEMENT. PROVIDE 7-1/2" EFFECTIVE EMBEDMENT INTO WALL.

2 SECTION
1" = 1'-0"

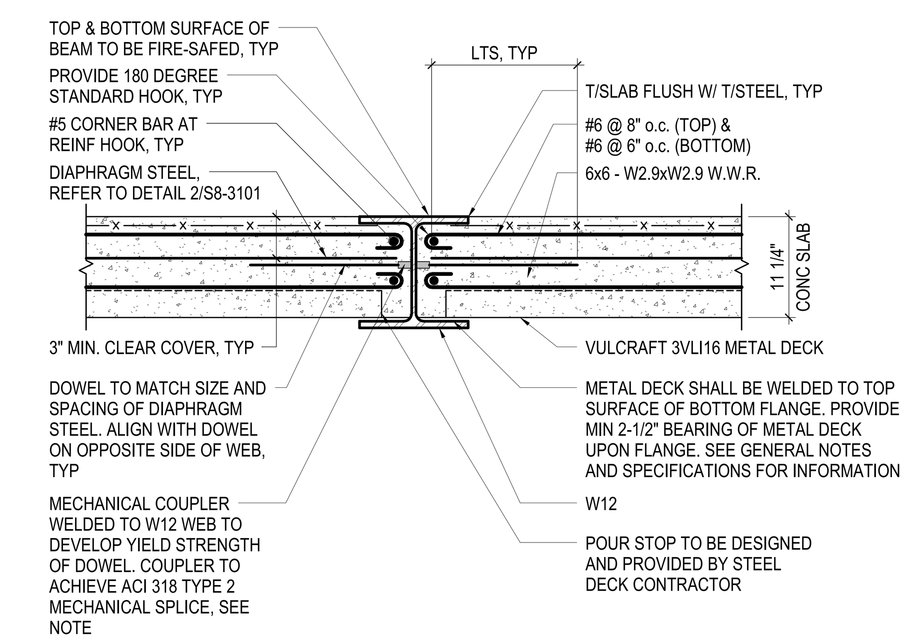

NOTE:
DOWELS MAY ALTERNATIVELY BE WELDED DIRECTLY TO W12 WEB TO DEVELOP YIELD STRENGTH OF DOWELS.

3 SECTION
1" = 1'-0"

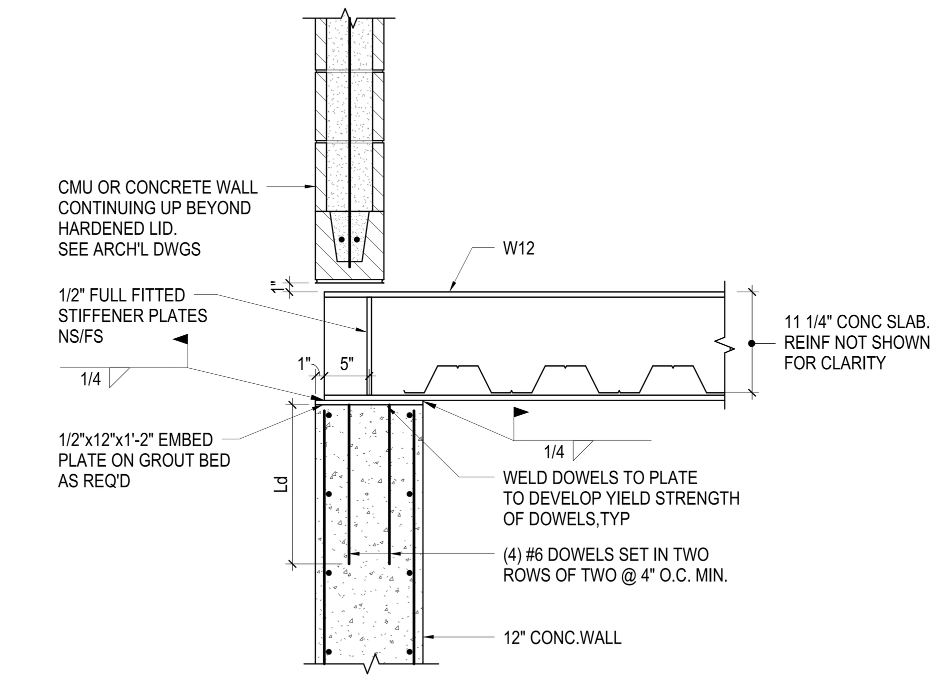

4 SECTION
1" = 1'-0"

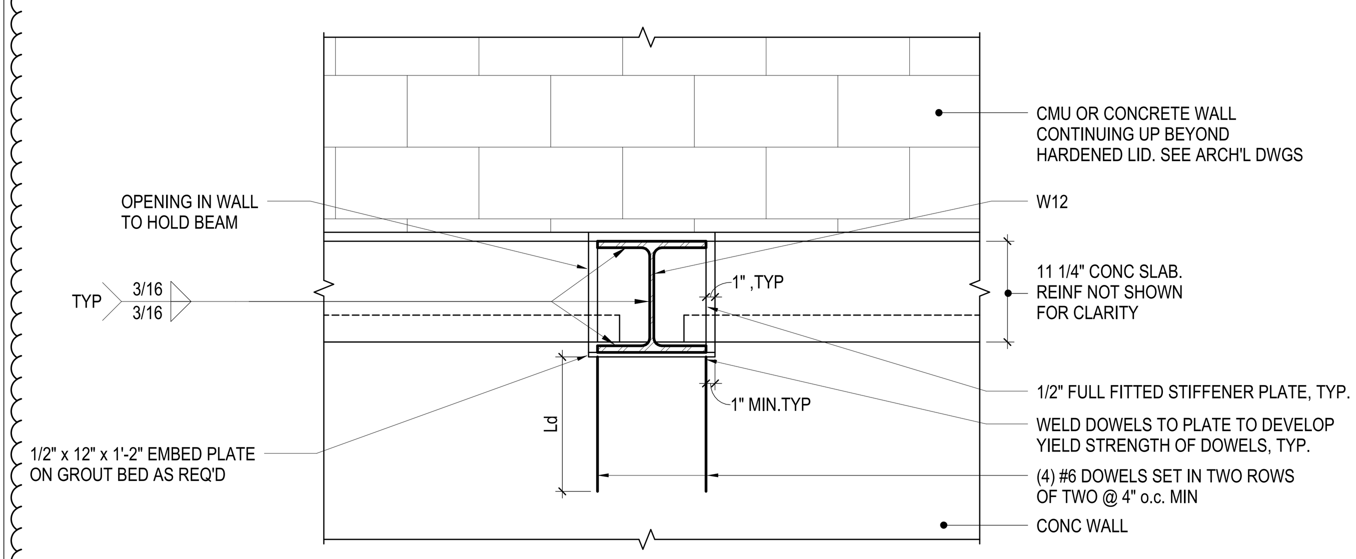

NOTE: SEE SHEET S8-2002 FOR TYPICAL CONCRETE REINFORCEMENT ARRANGEMENT AROUND WALL OPENINGS

5 SECTION
1" = 1'-0"

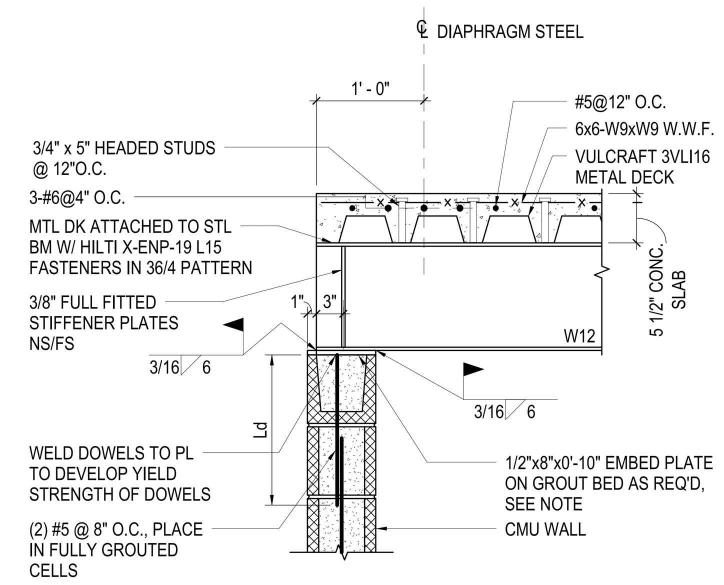

NOTE: EMBED PLATE LENGTH NOT TO EXCEED W12 WIDTH +2"

6 SECTION
1" = 1'-0"

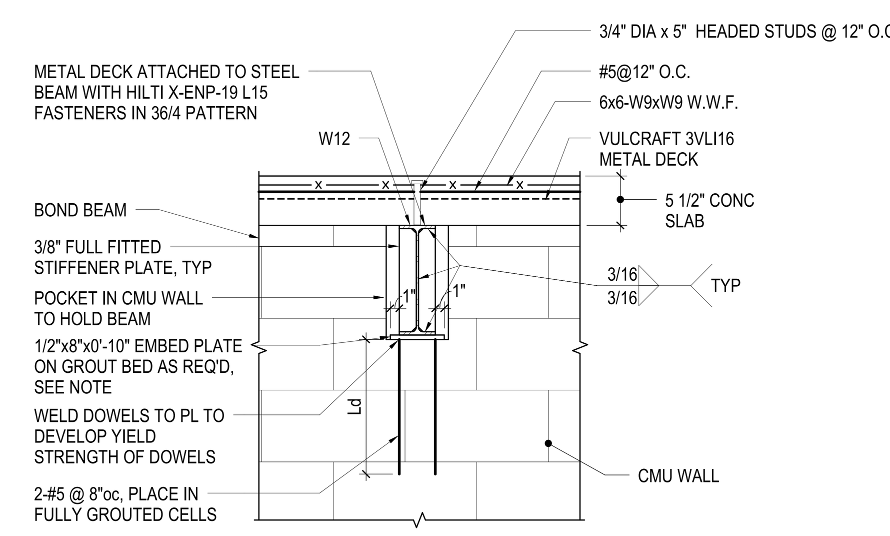

NOTE: EMBED PLATE LENGTH NOT TO EXCEED W12 WIDTH +2"

7 SECTION
1" = 1'-0"

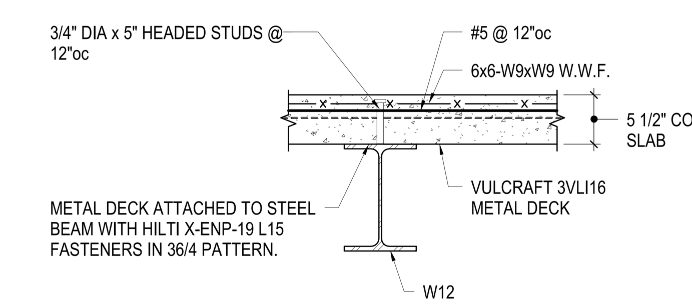

8 SECTION
1" = 1'-0"

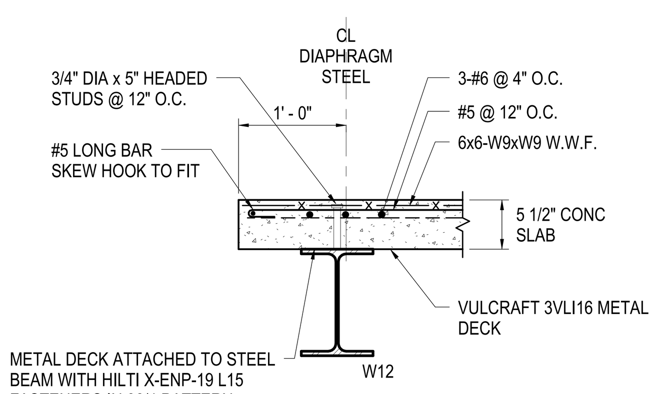

9 SECTION
1" = 1'-0"

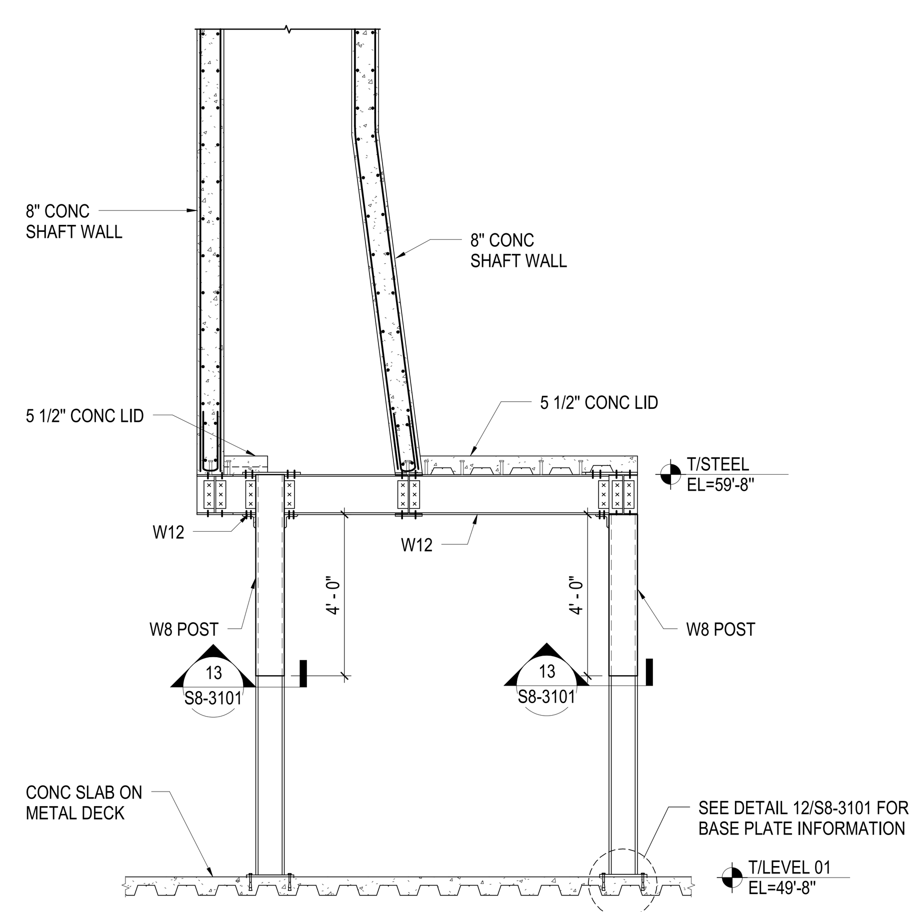

NOTE:
1. SEE TYPICAL CONCRETE WALL OR CMU WALL DETAILS FOR INFORMATION NOT SHOWN.
2. CMU WALL AND ANCHORAGES NOT SHOWN FOR CLARITY.

10 SECTION
3/8" = 1'-0"

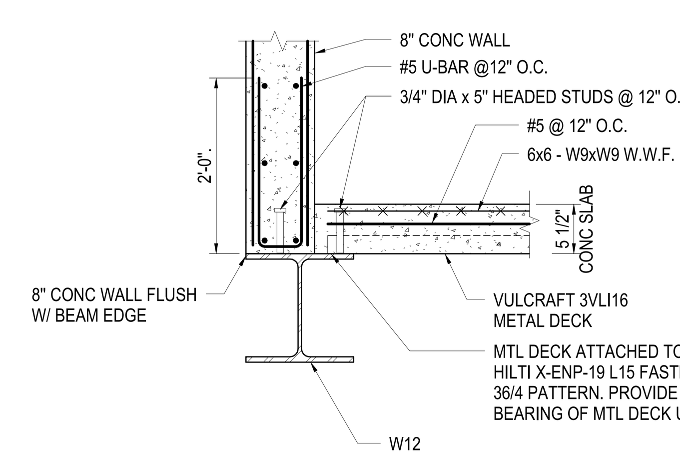

NOTE: SEE TYPICAL CONCRETE WALL OR CMU WALL DETAILS FOR INFORMATION NOT SHOWN

11 SECTION
1" = 1'-0"

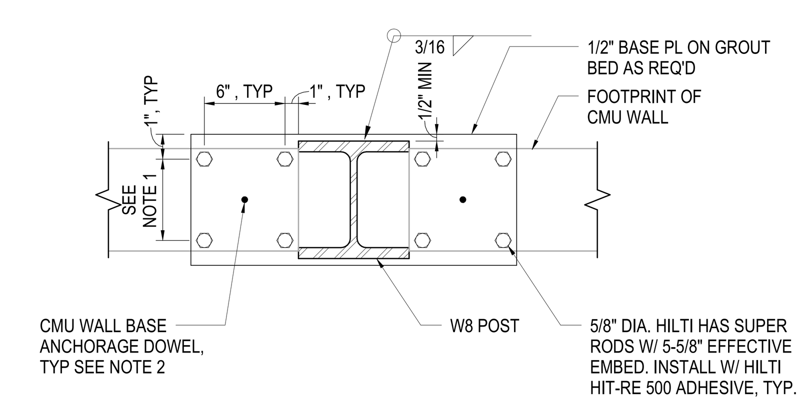

NOTE:
1. SURVEY OF METAL DECK FLUTES IS REQ'D PRIOR TO ROD INSTALLATION TO ENSURE EFFECTIVE EMBEDMENT LENGTH IS MET FOR THE RODS.
2. IN LOCATIONS WHERE CMU WALL BASE ANCHORAGE DOWELS ARE BLOCKED BY BASE PLATE, DOWELS SHALL BE WELDED TO TOP OF BASE PLATE TO DEVELOP YIELD STRENGTH OF DOWELS

12 SECTION
1 1/2" = 1'-0"

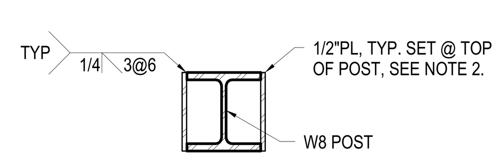

NOTES:

1. APPLICABLE TO EA W8 POST.
2. PLATE TO EXTEND 4'-0" CLEAR BENEATH CONNECTION BEAMS

13 SECTION
1" = 1'-0"

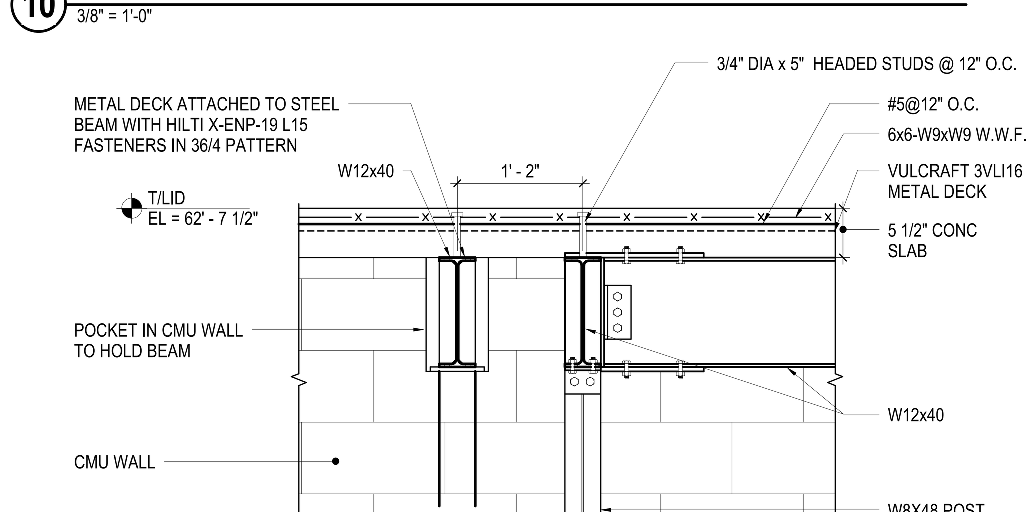

NOTES:
1. BEAM-TO-POST CONNECTION SHOWN FOR SCHEMATIC PURPOSES ONLY.
2. SEE DETAIL 7/S8-3101 FOR BEAM-TO-CMU WALL CONNECTION INFORMATION NOT SHOWN.

14 SECTION
1" = 1'-0"

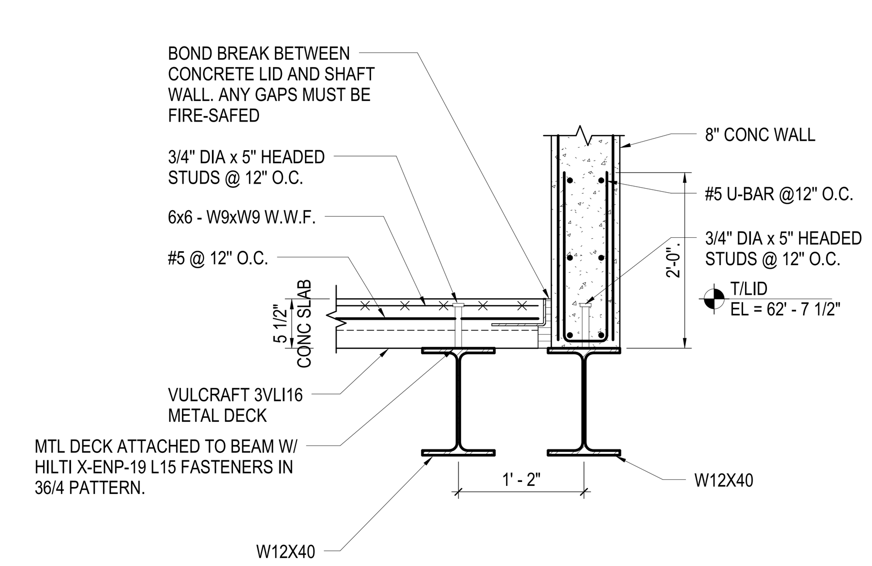

15 SECTION
1" = 1'-0"

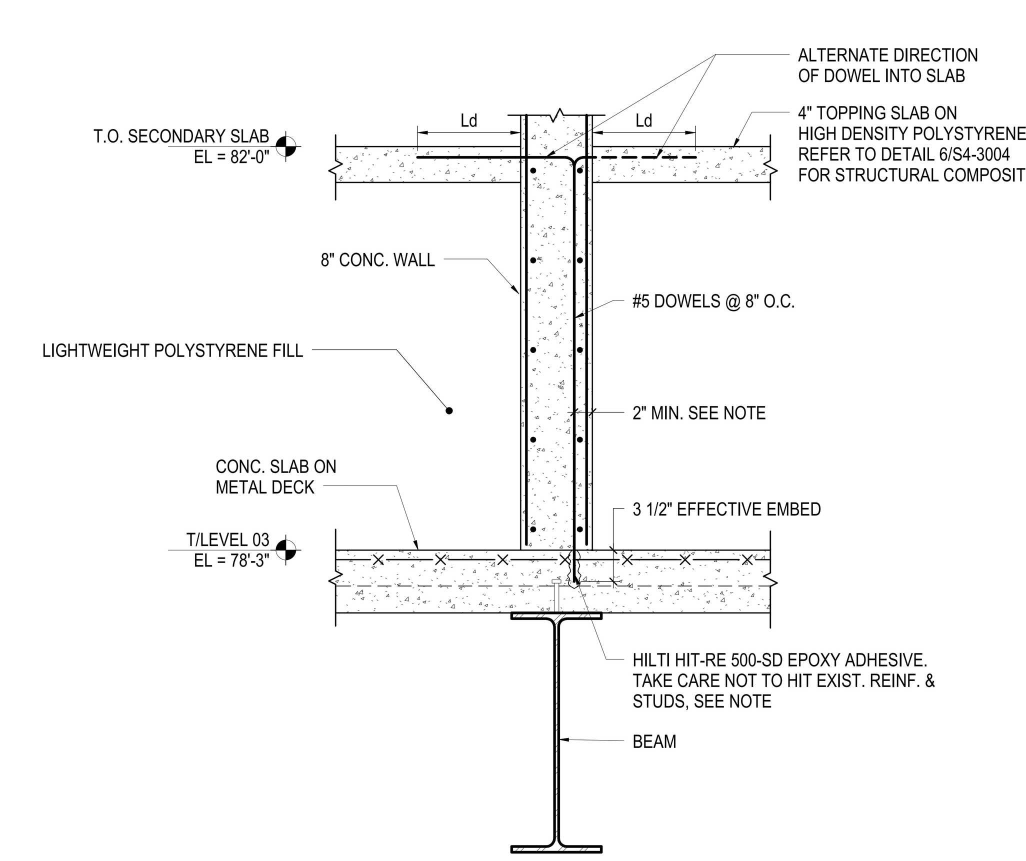

NOTE: ALIGN DOWELS AS REQ'D TO ENSURE EFFECTIVE EMBEDMENT LENGTH IS MET FOR THE DOWELS.

16 SECTION
1" = 1'-0"

Damian Titus
Buildings
APPROVED
Under Directive 2 of 1975
AMENDED APPLICATION
Date: 05/03/2017
NYC Development Hub

0 4' 8' 16'
N

DEPT OF BLDGS 121186251 Job Number
ES011750800 Scan Code

HUDSON YARDS - RETAIL PODIUM AND TOWER A
500 WEST 33RD STREET
New York, NY

Client
Related Companies
60 Columbus Circle
New York, NY 10023
TEL: 212.801.1000 FAX: 212.801.1048

Oxford Properties Group
320 Park Avenue, 17th Floor
New York, NY 10022
TEL: 212.986.7514 FAX: 212.986.7510

Architect
Kohn Pedersen Fox Associates
11 West 42nd Street
New York, New York 10036
TEL: 212.977.6500 FAX: 212.956.2526

Structural Engineer
Thornton Tomasetti, Inc.
51 Madison Avenue
New York, New York 10010
TEL: 917.661.7800 FAX: 718.661.7801

Mechanical, Electrical, Plumbing, Fire Protection
Jaros Baum & Bolles Consulting Engineers
80 Pine Street
New York, NY 10013
TEL: 212.530.9300 FAX: 212.269.5894

Retail Interior Design & Planning
Elkus-Manfredi
300 A Street
Boston, MA 02210
TEL: 617.426.1300

No.	Description	Date
2	D.O.B. AMENDMENT #2	10/15/2016
1	D.O.B. BUILDING PERMIT FILING	12/10/2014

Key Plan

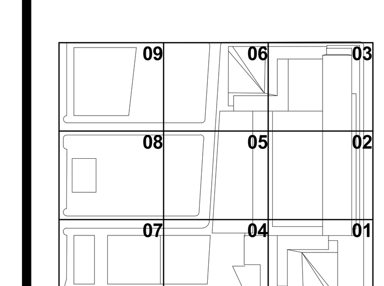

Issue Date: 12/10/2014
Project No. N11328.00
Drawn By Author
Sheet Number
HYE -TA -S8-3101
Drawing Title
BUILDING OPERATIONS SECTIONS AND DETAILS
Drawing Number
S8-3101
B-Scan Drawing Number
S-978.01
SHEET 433 OF 443

© 2013 KOHN PEDERSEN FOX ASSOCIATES PC. All rights reserved.

S8-3101
10/20/2016 7:49:52 AM
BUILDING OPERATIONS SECTIONS AND DETAILS
P:\NY1\Projects\N11328.00\Drawings\Structural\Record\Issued\2016-10-16 - D.O.B. Amendment No.2\Revit - Rev. Removed\HYTA_S8-series.rvt

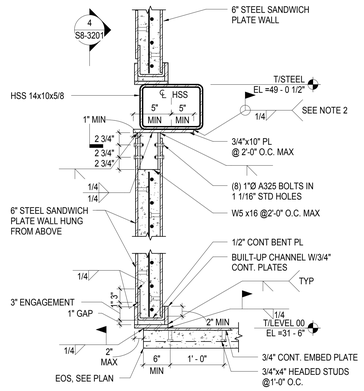

NOTES:
1. SEE TYPICAL STEEL PLATE SANDWICH WALL DETAILS FOR INFORMATION NOT SHOWN.
2. PROVIDE 5/16" FLARE BEVEL WELD WHERE FILLET WELD IS NOT APPLICABLE.

1 SECTION
1" = 1'-0"

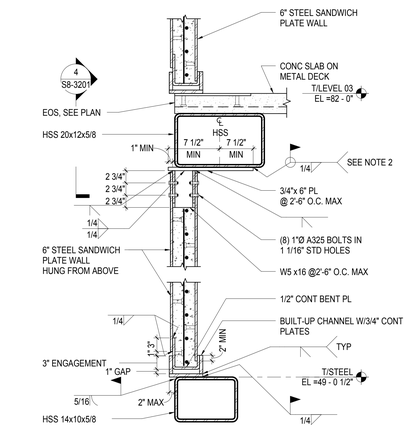

NOTES:
1. SEE TYPICAL STEEL PLATE SANDWICH WALL DETAILS FOR INFORMATION NOT SHOWN.
2. PROVIDE 5/16" FLARE BEVEL WELD WHERE FILLET WELD IS NOT APPLICABLE.

2 SECTION
1" = 1'-0"

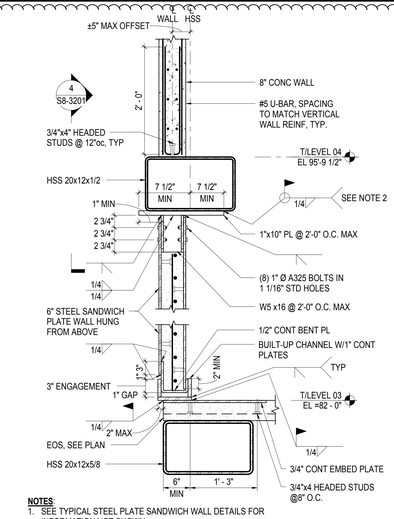

NOTES:
1. SEE TYPICAL STEEL PLATE SANDWICH WALL DETAILS FOR INFORMATION NOT SHOWN.
2. PROVIDE 5/16" FLARE BEVEL WELD WHERE FILLET WELD IS NOT APPLICABLE.

3 SECTION
1" = 1'-0"

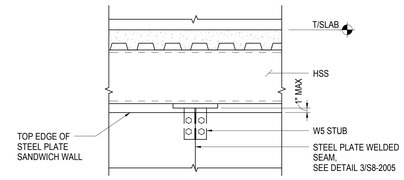

4 SECTION
1" = 1'-0"

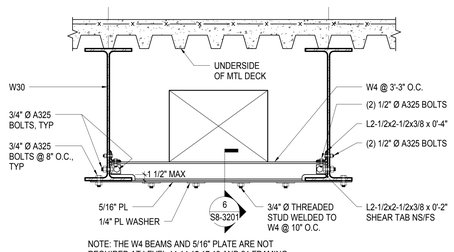

NOTE: THE W4 BEAMS AND 5/16" PLATE ARE NOT REQUIRED AT LEVEL 11,14,15,17,19 AND 21 FRAMING

STAIR PRESSURIZATION HORIZONTAL TRANSFER ENCLOSURE DETAIL
5
1" = 1'-0"

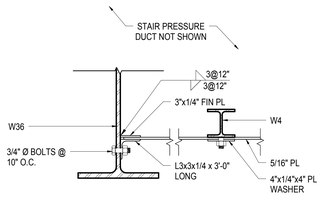

STAIR PRESSURIZATION HORIZONTAL TRANSFER ENCLOSURE DETAIL
6
1 1/2" = 1'-0"

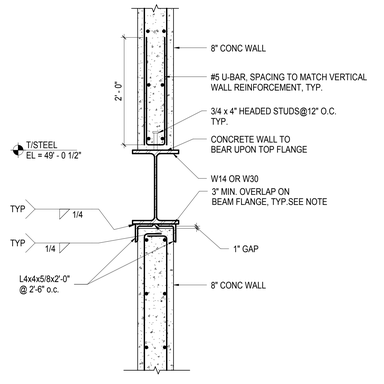

NOTE: SEE DETAIL 3A/S8-2001A FOR ALTERNATIVE DETAIL AT WALL OFFSET CONDITION

7 SECTION
1" = 1'-0"

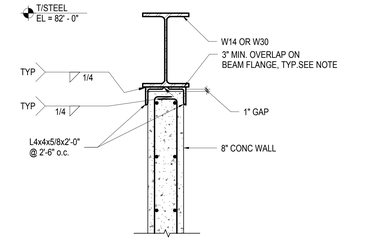

NOTE: SEE DETAIL 3A/S8-2001A FOR ALTERNATIVE DETAIL AT WALL OFFSET CONDITION

8 SECTION
1" = 1'-0"

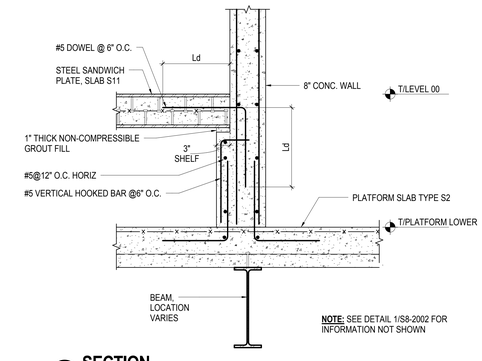

NOTE: SEE DETAIL 1/S8-2002 FOR INFORMATION NOT SHOWN

9 SECTION
1" = 1'-0"

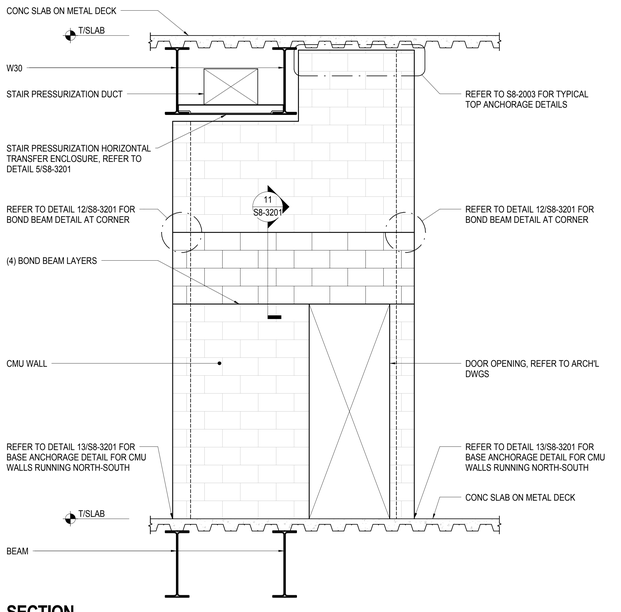

10 SECTION
1/2" = 1'-0"

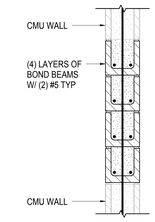

11 SECTION
1" = 1'-0"

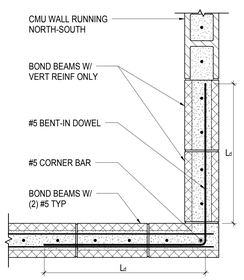

12 SECTION
1" = 1'-0"

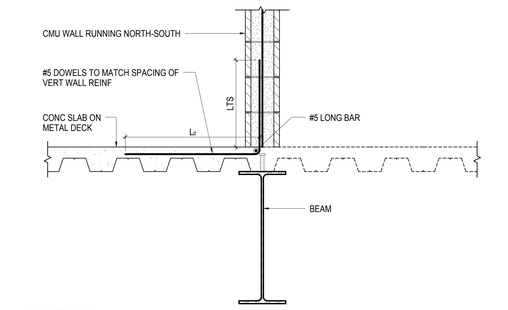

13 SECTION
1" = 1'-0"

HUDSON YARDS - RETAIL PODIUM AND TOWER A

500 WEST 33RD STREET
New York, NY

Client
Related Companies
60 Columbus Circle
New York, NY 10023
TEL: 212.801.1000 FAX: 212.801.1048

Oxford Properties Group
320 Park Avenue, 17th Floor
New York, NY 10022
TEL: 212.986.7514 FAX: 212.986.7510

Architect
Kohn Pedersen Fox Associates
11 West 42nd Street
New York, New York 10036
TEL: 212.977.6500 FAX: 212.956.2526

Structural Engineer
Thornton Tomasetti, Inc.
51 Madison Avenue
New York, New York 10010
TEL: 917.661.7800 FAX: 718.661.7801

Mechanical, Electrical, Plumbing, Fire Protection
Jaros Baum & Bolles Consulting Engineers
80 Pine Street
New York, NY 10013
TEL: 212.530.9300 FAX: 212.269.5894

Retail Interior Design & Planning
Elkus-Manfredi
300 A Street
Boston, MA 02210
TEL: 617.426.1300

No.	Description	Date
2	D.O.B. AMENDMENT #2	10/15/2016
1	D.O.B. BUILDING PERMIT FILING	12/10/2014

Key Plan

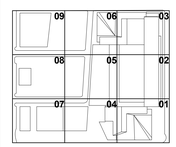

Issue Date: 12/10/2014
Project No. N11328.00
Drawn By: Author
Sheet Number

HYE -TA -S8-3201

Drawing Title

SHAFT WALL SECTIONS AND DETAILS

Drawing Number
S8-3201
S-Scan Drawing Number
S-979.01

SHEET 435 OF 443

Damian Titus
Buildings
APPROVED
Under Directive 2 of 1975
AMENDED APPLICATION
Date: 05/01/2017
NYC Development Hub

0 4' 8' 16'

N

© 2013 KOHN PEDERSEN FOX ASSOCIATES PC. All rights reserved.

S8-3201
10/20/2016 7:50:00 AM
SHAFT WALL SECTIONS AND DETAILS
P:\HYE\Arch\Revit\11-DOB_Permit\Revit\Sheets\Shaft Wall Sections and Details\S8-3201_R-DOB_Permit.rvt

DEPT OF BUILDINGS 421490925 Job Number
B2620500310 Scan Code

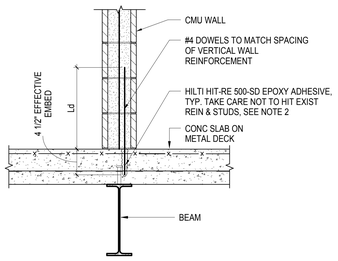

NOTES:
1. SEE DETAIL 1/S8-2003 FOR INFORMATION NOT SHOWN
2. SURVEY OF METAL DECK FLUTES IS REQ'D PRIOR TO DOWEL INSTALLATION TO ENSURE THE EFFECTIVE EMBEDMENT LENGTH IS MET FOR THE DOWELS

1A ALTERNATE CMU WALL BASE DETAIL AT SLAB ON METAL DECK - POST-INSTALLED OPTION
1" = 1'-0"

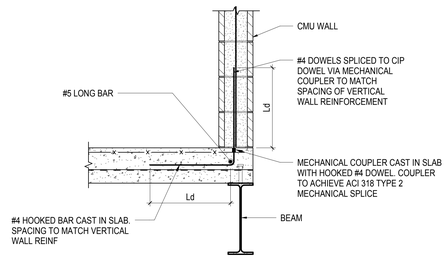

2A ALTERNATIVE CMU WALL BASE DETAIL AT SLAB ON METAL DECK - SHAFT CONDITION - POST-INSTALLED OPTION
1" = 1'-0"

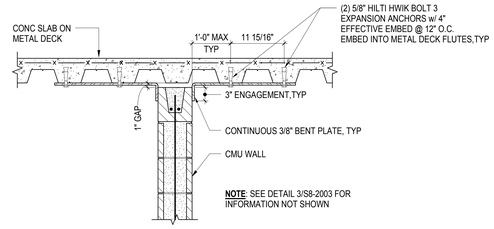

NOTE: SEE DETAIL 3/S8-2003 FOR INFORMATION NOT SHOWN

3A ALTERNATE CMU WALL TOP BRACE DETAIL AT SLAB ON METAL DECK - FLUTES PARALLEL
1" = 1'-0"

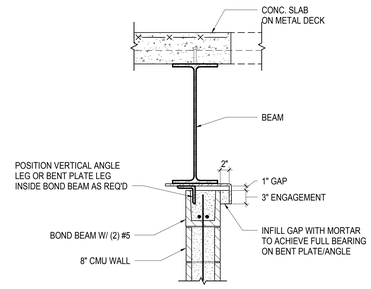

NOTE: REFER TO S8-2003 FOR INFORMATION NOT SHOWN.

6A ALTERNATE CMU WALL TOP BRACE DETAIL AT STEEL BEAM - OFFSET CONDITION
1" = 1'-0"

HUDSON YARDS - RETAIL PODIUM AND TOWER A
500 WEST 33RD STREET
New York, NY

Client
Related Companies
60 Columbus Circle
New York, NY 10023
TEL: 212.801.1000 FAX: 212.801.1048

Oxford Properties Group
320 Park Avenue, 17th Floor
New York, NY 10022
TEL: 212.986.7514 FAX: 212.986.7510

Architect
Kohn Pedersen Fox Associates
11 West 42nd Street
New York, New York 10036
TEL: 212.977.6500 FAX: 212.956.2526

Structural Engineer
Thornton Tomasetti, Inc.
51 Madison Avenue
New York, New York 10010
TEL: 917.661.7800 FAX: 718.661.7801

Mechanical, Electrical, Plumbing, Fire Protection
Jaros Baum & Bolles Consulting Engineers
80 Pine Street
New York, NY 10013
TEL: 212.530.9300 FAX: 212.269.5894

Retail Interior Design & Planning
Elkus-Manfredi
300 A Street
Boston, MA 02210
TEL: 617.426.1300

No.	Description	Date
1	D.O.B. AMENDMENT #2	10/15/2016

Key Plan

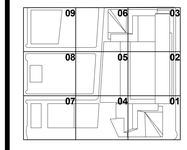

Issue Date: 10/15/2016
Project No. N11328.00
Drawn By: Author
Sheet Number

HYE -TA -S8-2003A

Drawing Title

SPECIAL MASONRY WALL ALTERNATE DETAILS

Drawing Number
S8-2003A
B-Scan Drawing Number
S-992.00

Damian Titus
Building
APPROVED
Under Directive 2 of 1975
AMENDED APPLICATION
Date: 05/01/2017
NYC Development Hub

0 4' 8' 16'

N

© 2013 KOHN PEDERSEN FOX ASSOCIATES PC. All rights reserved.

S8-2003A
10/19/2016 10:50:20 AM
SPECIAL MASONRY WALL ALTERNATE DETAILS
P:\NY\Projects\N11328.00\Drawings\Source\#Record\Issued\2016-10-16 - D.O.B. Amendment No.2\Revit - Rev. Removed\HYTA_S8-series.rvt

DEPT OF BUILDINGS 421496253 Job Number
BS 140993.275 Scan Code

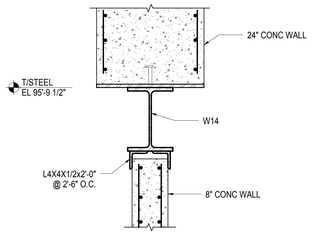

NOTE: SEE TYPICAL CONCRETE WALL DETAILS FOR INFORMATION NOT SHOWN.

1 SECTION
1" = 1'-0"

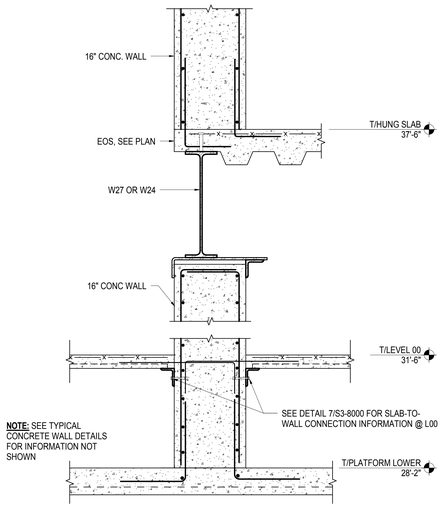

2 SECTION
1" = 1'-0"

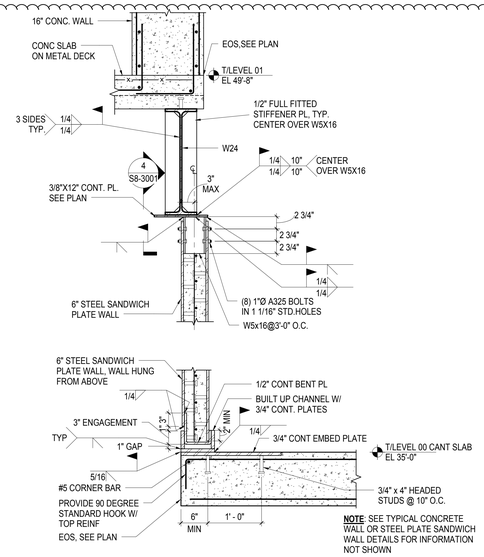

3 SECTION
1" = 1'-0"

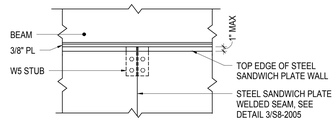

4 SECTION
1" = 1'-0"

5 SECTION
1" = 1'-0"

6 SECTION
1" = 1'-0"

7 SECTION
1" = 1'-0"

8 SECTION
1" = 1'-0"

9 PLAN VIEW
3/4" = 1'-0"

10 SECTION
3/4" = 1'-0"

11 SECTION
3/4" = 1'-0"

HUDSON YARDS - RETAIL PODIUM AND TOWER A
500 WEST 33RD STREET
New York, NY

Client
Related Companies
60 Columbus Circle
New York, NY 10023
TEL: 212.801.1000 FAX: 212.801.1048

Oxford Properties Group
320 Park Avenue, 17th Floor
New York, NY 10022
TEL: 212.986.7514 FAX: 212.986.7510

Architect
Kohn Pedersen Fox Associates
11 West 42nd Street
New York, New York 10036
TEL: 212.977.6500 FAX: 212.956.2526

Structural Engineer
Thornton Tomasetti, Inc.
51 Madison Avenue
New York, New York 10010
TEL: 917.661.7800 FAX: 718.661.7801

Mechanical, Electrical, Plumbing, Fire Protection
Jaros Baum & Bolles Consulting Engineers
80 Pine Street
New York, NY 10013
TEL: 212.530.9300 FAX: 212.269.5894

Retail Interior Design & Planning
Elkus-Manfredi
300 A Street
Boston, MA 02210
TEL: 617.426.1300

No.	Description	Date
2	D.O.B. AMENDMENT #2	10/15/2016
1	D.O.B. BUILDING PERMIT FILING	12/10/2014

Key Plan

Issue Date: 12/10/2014
Project No. N11328.00
Drawn By: Author
Sheet Number

HYE -TA -S8-3001
Drawing Title

STAIR A SECTIONS & DETAILS

Damian Titus
Buildings
APPROVED
Under Directive 2 of 1975
AMENDED APPLICATION
Date: 05/01/2017
NYC Development Hub

Drawing Number
S8-3001
Actual Drawing Number
S-993.01

0 4' 8' 16'

SHEET 428 OF 722

© 2013 KOHN PEDERSEN FOX ASSOCIATES PC. All rights reserved.

S8-3001
10/19/2016 11:24:45 AM
S:\HUY-S SECTIONS & DETAILS
P:\NY\Projects\N11328.00\Drawings\Structural\Record\Issued\2016-10-16 - D.O.B. Amendment No.2\Revit - Rev - Removed\HYTA_S8-series.rvt

DEPT OF BUILDINGS ATTENDANTS Job Number
E1007052975 Scan Code

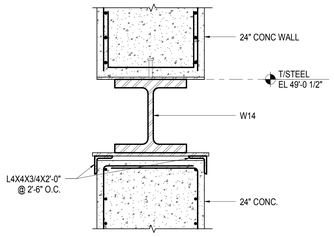

NOTE:
SEE TYPICAL CONCRETE WALL DETAILS
FOR INFORMATION NOT SHOWN.

1 SECTION
1" = 1'-0"

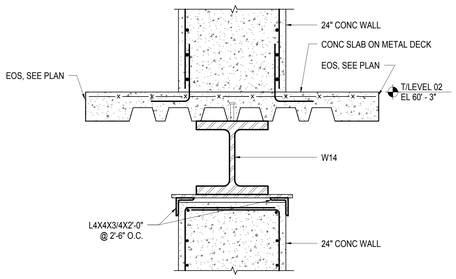

NOTE: SEE TYPICAL CONC WALL DETAILS FOR INFORMATION NOT SHOWN.

2 SECTION
1" = 1'-0"

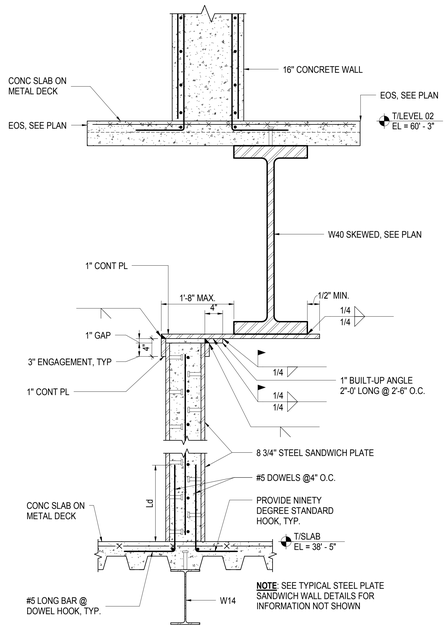

NOTE: SEE TYPICAL STEEL PLATE
SANDWICH WALL DETAILS FOR
INFORMATION NOT SHOWN

3 SECTION
1" = 1'-0"

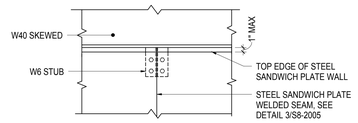

4 SECTION
1" = 1'-0"

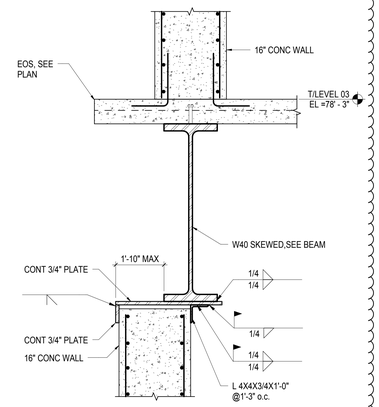

NOTE: SEE TYPICAL CONC WALL DETAILS FOR INFORMATION NOT SHOWN

5 SECTION
1" = 1'-0"

6 SECTION
1" = 1'-0"

NOTE: SEE TYPICAL CONCRETE
WALL OR STEEL PLATE
SANDWICH WALL DETAILS FOR
INFORMATION NOT SHOWN

7 SECTION
1" = 1'-0"

NOTE: SEE TYPICAL CONCRETE
WALL OR STEEL PLATE
SANDWICH WALL DETAILS FOR
INFORMATION NOT SHOWN

8 SECTION
1" = 1'-0"

NOTE:

SEE TYPICAL STEEL PLATE SANDWICH
WALL DETAILS FOR INFORMATION NOT
SHOWN

9 SECTION
1" = 1'-0"

HUDSON YARDS - RETAIL PODIUM AND TOWER A

500 WEST 33RD STREET
New York, NY

Client
Related Companies
60 Columbus Circle
New York, NY 10023
TEL: 212.801.1000 FAX: 212.801.1048

Oxford Properties Group
320 Park Avenue, 17th Floor
New York, NY 10022
TEL: 212.986.7514 FAX: 212.986.7510

Architect
Kohn Pedersen Fox Associates
11 West 42nd Street
New York, New York 10036
TEL: 212.977.6500 FAX: 212.956.2526

Structural Engineer
Thornton Tomasetti, Inc.
51 Madison Avenue
New York, New York 10010
TEL: 917.661.7800 FAX: 718.661.7801

Mechanical, Electrical, Plumbing, Fire Protection
Jaros Baum & Bolles Consulting Engineers
80 Pine Street
New York, NY 10013
TEL: 212.530.9300 FAX: 212.269.5894

Retail Interior Design & Planning
Elkus-Manfredi
300 A Street
Boston, MA 02210
TEL: 617.426.1300

No.	Description	Date
2	D.O.B. AMENDMENT #2	10/15/2016
1	D.O.B. BUILDING PERMIT FILING	12/10/2014

Key Plan

Issue Date: 12/10/2014
Project No. N11328.00
Drawn By: Author
Sheet Number

Damian Titus
APPROVED
Under Directive 2 of 1975
AMENDED APPLICATION
Date: 05/03/2017
NYC Development Hub

HYE -TA -S8-3011

Drawing Title

STAIR B SECTIONS & DETAILS

Drawing Number
S8-3011
B-Scan Drawing Number
S-994.01

0 4' 8' 16'

© 2013 KOHN PEDERSEN FOX ASSOCIATES PC All rights reserved.

S8-3011
10/19/2016 11:24:49 AM
S8-3011 STAIR B SECTIONS & DETAILS
P:\NY\Projects\N11328.00\Drawings\Structural\Record\Issued\2016-10-19 - D.O.B. Amendment No.2\Revit - Rev. Removed\HYTA_S8-series.rvt

DEPT OF BUILDINGS Job Number
E1071850255 Scan Code

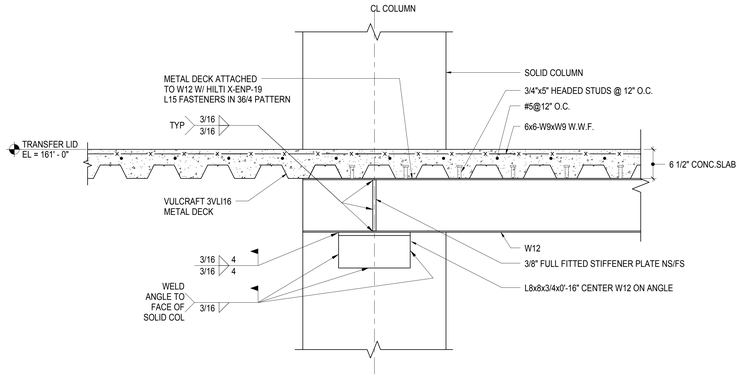

1 SECTION
1" = 1'-0"

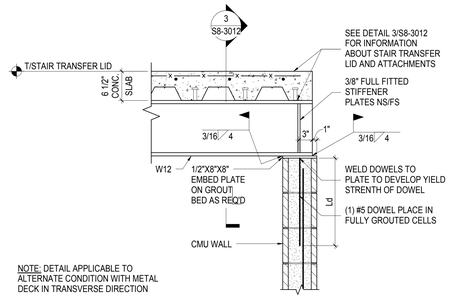

2 SECTION
1" = 1'-0"

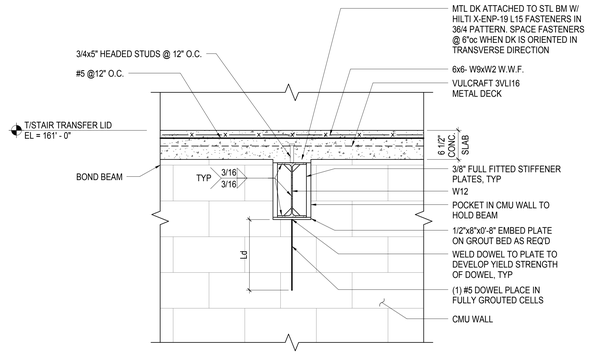

3 SECTION
1" = 1'-0"

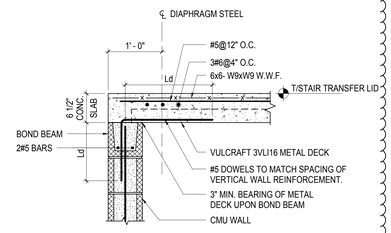

4 SECTION
1" = 1'-0"

5 SECTION
1" = 1'-0"

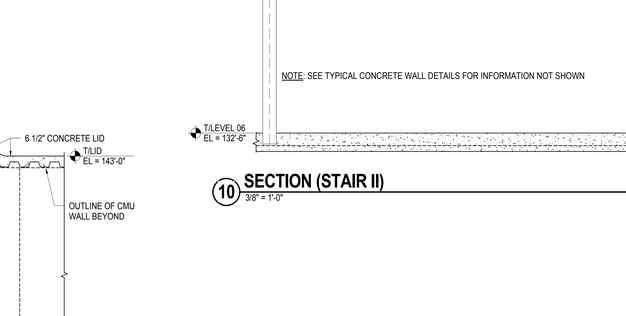

6 SECTION
1" = 1'-0"

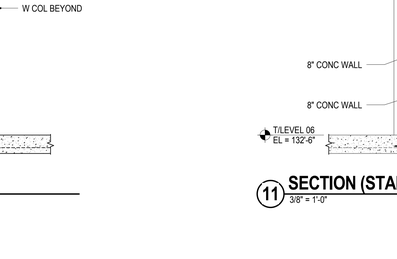

7 SECTION
1" = 1'-0"

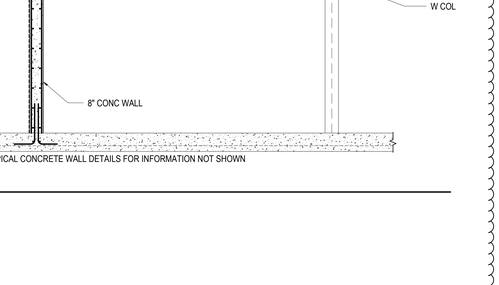

8 SECTION
1" = 1'-0"

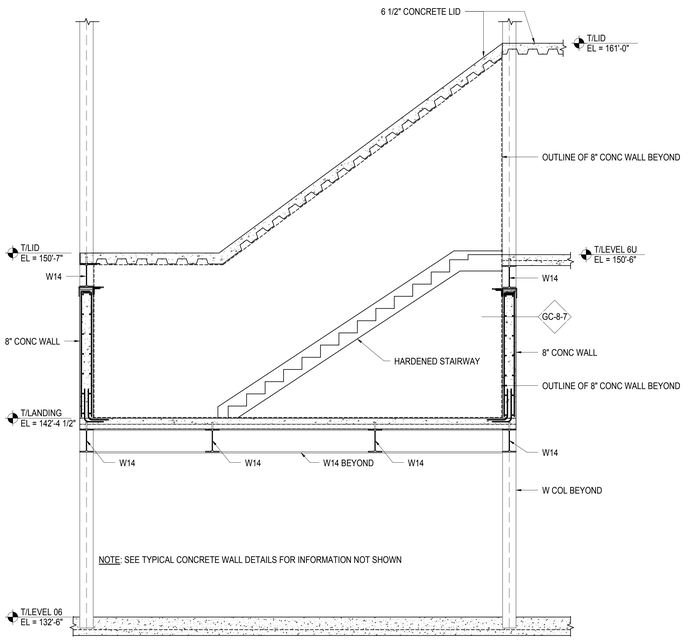

10 SECTION (STAIR II)
3/8" = 1'-0"

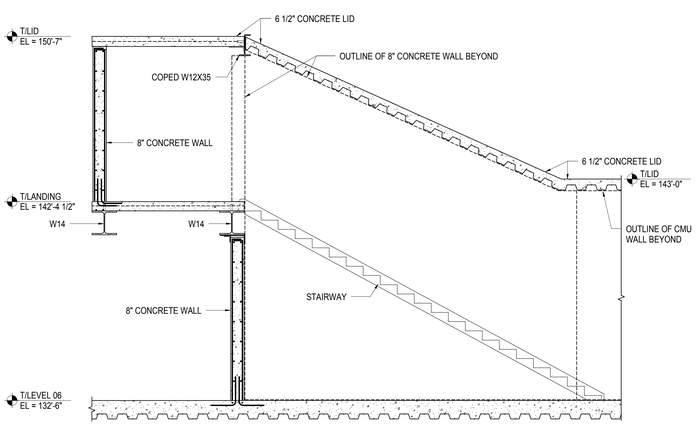

9 SECTION (STAIR I)
3/8" = 1'-0"

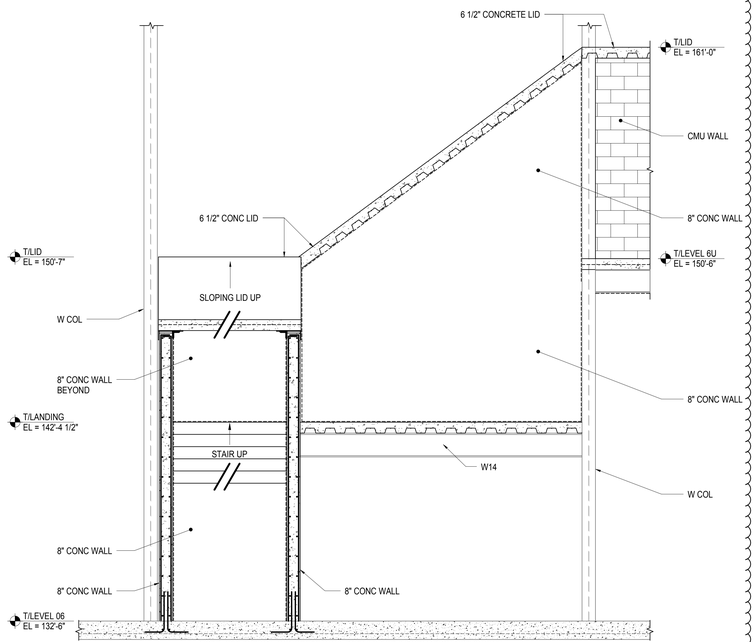

11 SECTION (STAIR III)
3/8" = 1'-0"

HUDSON YARDS - RETAIL PODIUM AND TOWER A

500 WEST 33RD STREET
New York, NY

Client
Related Companies
60 Columbus Circle
New York, NY 10023
TEL: 212.801.1000 FAX: 212.801.1048

Oxford Properties Group
320 Park Avenue, 17th Floor
New York, NY 10022
TEL: 212.986.7514 FAX: 212.986.7510

Architect
Kohn Pedersen Fox Associates
11 West 42nd Street
New York, New York 10036
TEL: 212.977.6500 FAX: 212.956.2526

Structural Engineer
Thornton Tomasetti, Inc.
51 Madison Avenue
New York, New York 10010
TEL: 917.661.7800 FAX: 718.661.7801

Mechanical, Electrical, Plumbing, Fire Protection
Jaros Baum & Bolles Consulting Engineers
80 Pine Street
New York, NY 10013
TEL: 212.530.9300 FAX: 212.269.5894

Retail Interior Design & Planning
Elkus-Manfredi
300 A Street
Boston, MA 02210
TEL: 617.426.1300

No.	Description	Date
2	D.O.B. AMENDMENT #2	10/15/2016
1	D.O.B. BUILDING PERMIT FILING	12/10/2014

Key Plan

09 06 03
08 05 02
07 04 01

Issue Date: 12/10/2014
Project No. N11328.00
Drawn By Author
Sheet Number

HYE -TA -S8-3012
Drawing Title

STAIR B SECTIONS & DETAILS

Drawing Number
S8-3012
B-Scan Drawing Number
S-995.01

SHEET 430 OF 443

Damian Titus
Buildings
APPROVED
Under Directive 2 of 1975
MECHANICAL APPLICATION
Date: 05/03/2017
NYC Development Hub

0 4' 8' 16'
N

© 2013 KOHN PEDERSEN FOX ASSOCIATES PC. All rights reserved.

S8-3012
10/19/2016 11:24:54 AM
STAIR B SECTIONS & DETAILS
P:\NY\Projects\N11328.00\Drawings\Structural Record\Issued\2016-10-16 - D.O.B. Amendment No.2\Revit - Rev. Removed\HYTA_S8-series.rvt

DEPT OF BUILDINGS 421490255 Job Number
E500067072 Scan Code

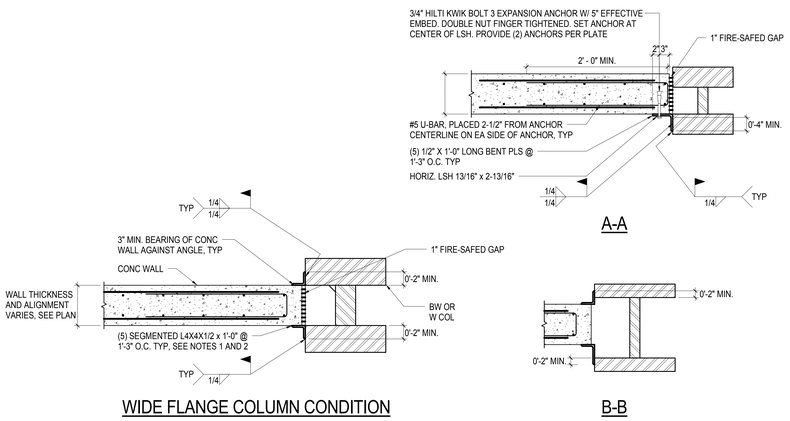

NOTES:
1. FOR THICKER WALLS OR WALLS OFFSET FROM COLUMN CENTERLINE WHERE 2" MINIMUM OVERLAP IS UNABLE TO BE ACHIEVED FOR ANGLES, PROVIDE POST-INSTALLED ANCHORAGE SHOWN IN INSET DETAIL A-A.
2. ANGLES WITH LONGER LEGS SHALL BE USED TO ACHIEVE A 2" MINIMUM OVERLAP BETWEEN ANGLE AND FLANGE, REFER TO INSET DETAIL B-B.
3. DETAIL IS APPLICABLE FOR LEVELS 00-06 ONLY PER NOTE 3 IN DETAIL 9/S8-2002.

1 POST-INSTALLED CONCRETE WALL BRACE DETAIL AT STEEL COLUMN - PLAN
3/4" = 1'-0"

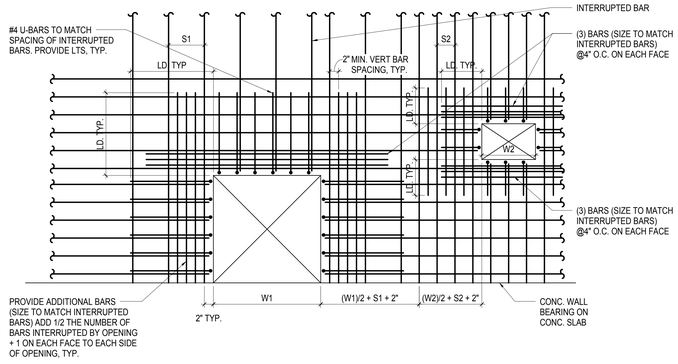

NOTE:
REFER TO DETAIL 2/S8-2002A FOR TYPICAL ARRANGEMENT AROUND MULTIPLE OPENINGS.

2 TYPICAL MULTIPLE LARGE OPENINGS IN SPECIAL CONCRETE WALLS
1" = 1'-0"

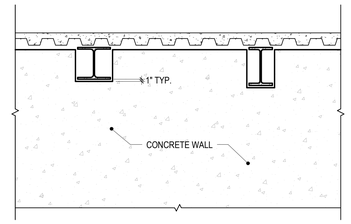

NOTE:
TYPICAL TOP ANCHORAGE NOT SHOWN. FOR ADDITIONAL INFORMATION, REFER TO S8-2001.

3 TYPICAL BEAM PENETRATION THROUGH CONCRETE WALL
1/2" = 1'-0"

HUDSON YARDS - RETAIL PODIUM AND TOWER A

500 WEST 33RD STREET
New York, NY

Client
Related Companies
60 Columbus Circle
New York, NY 10023
TEL: 212.801.1000 FAX: 212.801.1048

Oxford Properties Group
320 Park Avenue, 17th Floor
New York, NY 10022
TEL: 212.986.7514 FAX: 212.986.7510

Architect
Kohn Pedersen Fox Associates
11 West 42nd Street
New York, New York 10036
TEL: 212.977.6500 FAX: 212.956.2526

Structural Engineer
Thornton Tomasetti, Inc.
51 Madison Avenue
New York, New York 10010
TEL: 917.661.7800 FAX: 718.661.7801

Mechanical, Electrical, Plumbing, Fire Protection
Jaros Baum & Bolles Consulting Engineers
80 Pine Street
New York, NY 10013
TEL: 212.530.9300 FAX: 212.269.5894

Retail Interior Design & Planning
Elkus-Manfredi
300 A Street
Boston, MA 02210
TEL: 617.426.1300

No.	Description	Date
1	D.O.B. AMENDMENT #2	10/15/2016

Key Plan

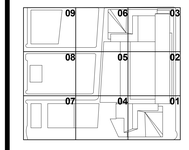

Issue Date: 10/15/2016
Project No. N11328.00
Drawn By: Author
Sheet Number

HYE -TA -S8-2002A

Drawing Title

SPECIAL CONCRETE WALL TYPICAL DETAILS

Drawing Number
S8-2002A
B-Scan Drawing Number
S-996.00

Damian Titus
Building
APPROVED
Under Directive 2 of 1975
AMENDED APPLICATION
Date: 05/01/2017
NYC Development Hub

0 4' 8' 16'
N

S8-2002A
10/19/2016 10:50:13 AM
SPECIAL CONCRETE WALL TYPICAL DETAILS
P:\NY1\Projects\N11328.00\Drawings\Structural\#Reconf\Issued\2016-10-16 - D.O.B. Amendment No.2\Revit - Rev. Removed\HYTA_S8-series.rvt

EXIST OF BLDG(S) Job Number
E20160719P05 Scan Code

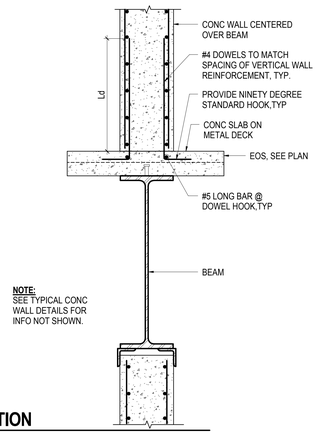

1 SECTION
1" = 1'-0"

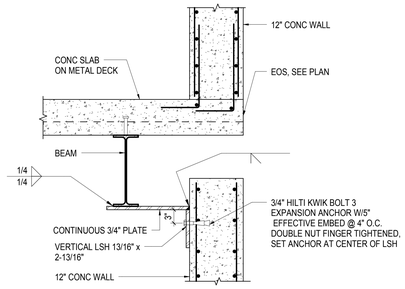

2 SECTION
1" = 1'-0"

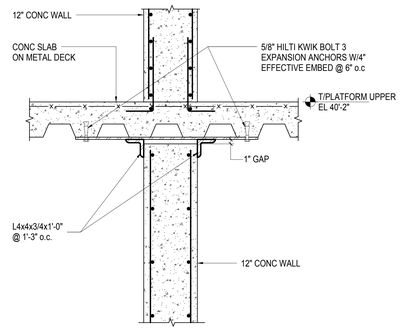

3 SECTION
1" = 1'-0"

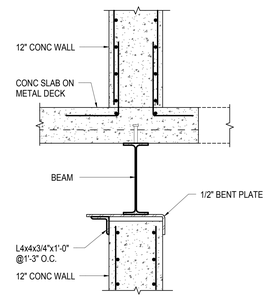

4 SECTION
1" = 1'-0"

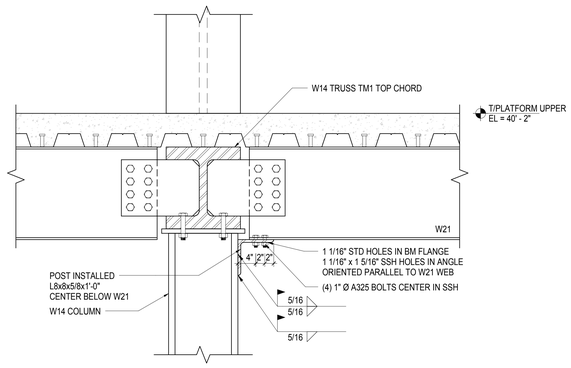

5 SECTION
1" = 1'-0"

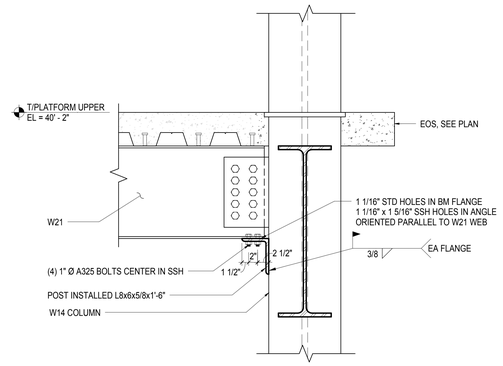

6 SECTION
1" = 1'-0"

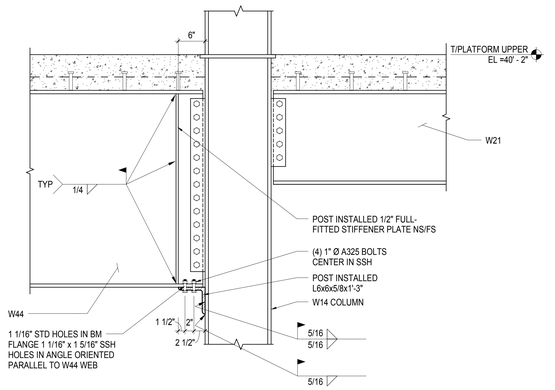

7 SECTION
1" = 1'-0"

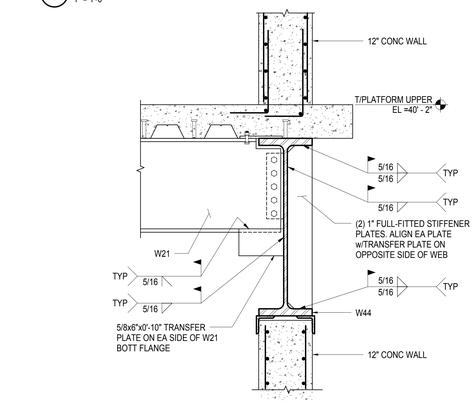

8 SECTION
1" = 1'-0"

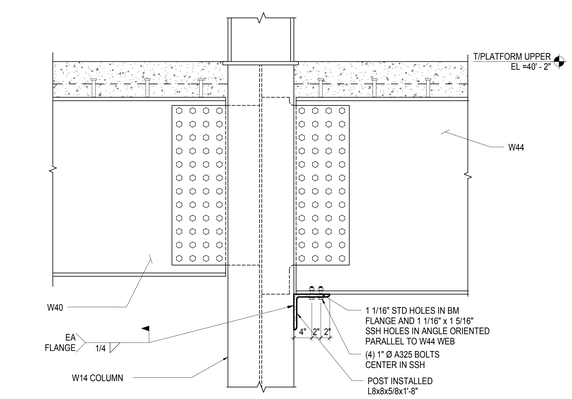

9 SECTION
1" = 1'-0"

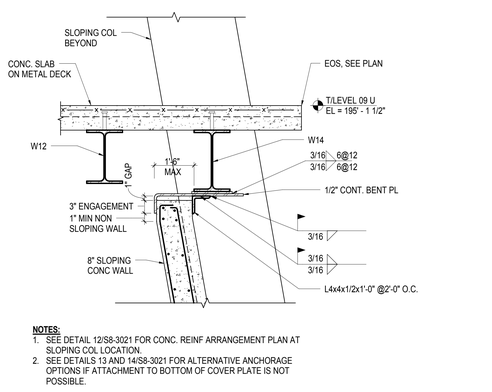

10 SECTION
1" = 1'-0"

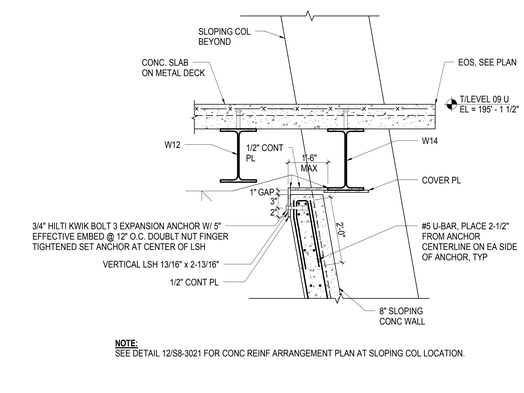

11 SECTION
1" = 1'-0"

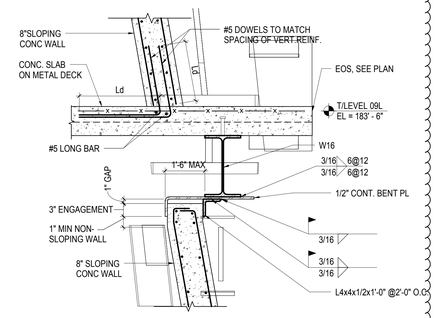

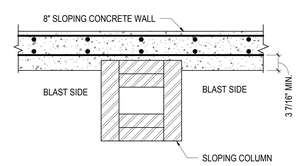

12 SECTION
1" = 1'-0"

13 SECTION
1" = 1'-0"

14 SECTION
1" = 1'-0"

0 4' 8' 16'

N

HUDSON YARDS - RETAIL PODIUM AND TOWER A

500 WEST 33RD STREET
New York, NY

Client
Related Companies
60 Columbus Circle
New York, NY 10023
TEL: 212.801.1000 FAX: 212.801.1048

Oxford Properties Group
320 Park Avenue, 17th Floor
New York, NY 10022
TEL: 212.986.7514 FAX: 212.986.7510

Architect
Kohn Pedersen Fox Associates
11 West 42nd Street
New York, New York 10036
TEL: 212.977.6500 FAX: 212.956.2526

Structural Engineer
Thornton Tomasetti, Inc.
51 Madison Avenue
New York, New York 10010
TEL: 917.661.7800 FAX: 718.661.7801

Mechanical, Electrical, Plumbing, Fire Protection
Jaros Baum & Bolles Consulting Engineers
80 Pine Street
New York, NY 10013
TEL: 212.530.9300 FAX: 212.269.5894

Retail Interior Design & Planning
Elkus-Manfredi
300 A Street
Boston, MA 02210
TEL: 617.426.1300

No.	Description	Date
2	D.O.B. AMENDMENT #2	10/15/2016
1	D.O.B. BUILDING PERMIT FILING	12/10/2014

Key Plan

09 06 03
08 05 02
07 04 01

Issue Date: 12/10/2014
Project No. N11328.00
Drawn By Author
Sheet Number

Damian Titus
DOB Buildings
APPROVED
Under Directive 2 of 1975
AMENDED APPLICATION
Date: 05/03/2017
NYC Development Hub

HYE -TA -S8-3021

Drawing Title

STAIR C/E SECTIONS & DETAILS

Drawing Number
S8-3021
B-Scan Drawing Number
S-997.01

© 2013 KOHN PEDERSEN FOX ASSOCIATES PC. All rights reserved.

S8-3021
10/19/2016 11:25:40 AM
STAIR C/E SECTIONS & DETAILS
P:\NY\Projects\N11328.00\Drawings\Structural\Record\Issued\2016-10-19 - D.O.B. Amendment No.2\Revit - Rev. Removed\HYTA_S8-series.rvt

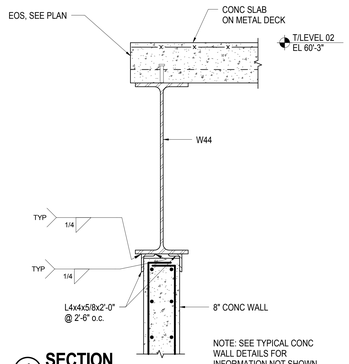

NOTE: SEE TYPICAL CONC WALL DETAILS FOR INFORMATION NOT SHOWN

1 SECTION
1" = 1'-0"

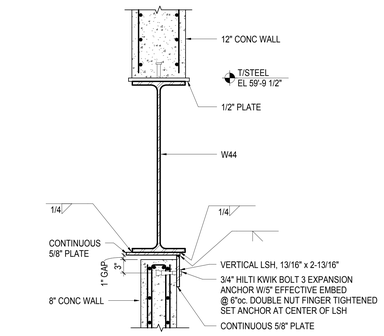

NOTE: SEE TYPICAL CONC WALL DETAILS FOR INFORMATION NOT SHOWN.

2 SECTION
1" = 1'-0"

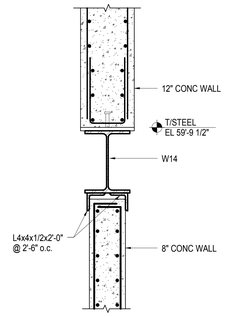

NOTE:
SEE TYPICAL CONC WALL DETAILS FOR INFORMATION NOT SHOWN.

3 SECTION
1" = 1'-0"

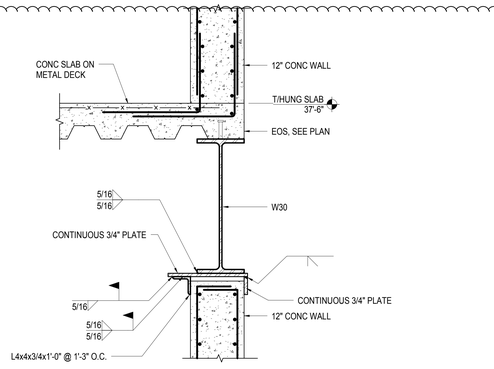

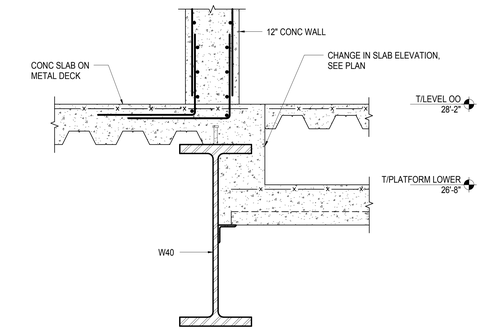

NOTE:
SEE TYPICAL CONC WALL DETAILS FOR INFORMATION NOT SHOWN.

4 SECTION
1" = 1'-0"

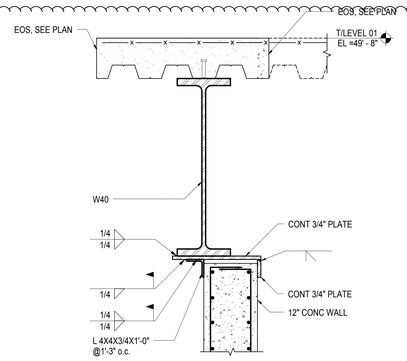

NOTE: SEE TYPICAL CONC WALL DETAILS FOR INFORMATION NOT SHOWN

5 SECTION
1" = 1'-0"

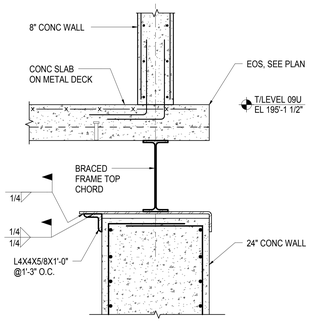

NOTE:
SEE TYPICAL CONC WALL DETAILS FOR INFORMATION NOT SHOWN.

6 SECTION
1" = 1'-0"

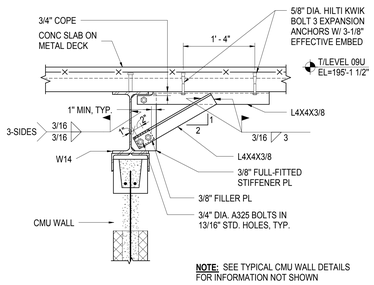

NOTE: SEE TYPICAL CMU WALL DETAILS FOR INFORMATION NOT SHOWN

7 SECTION
1" = 1'-0"

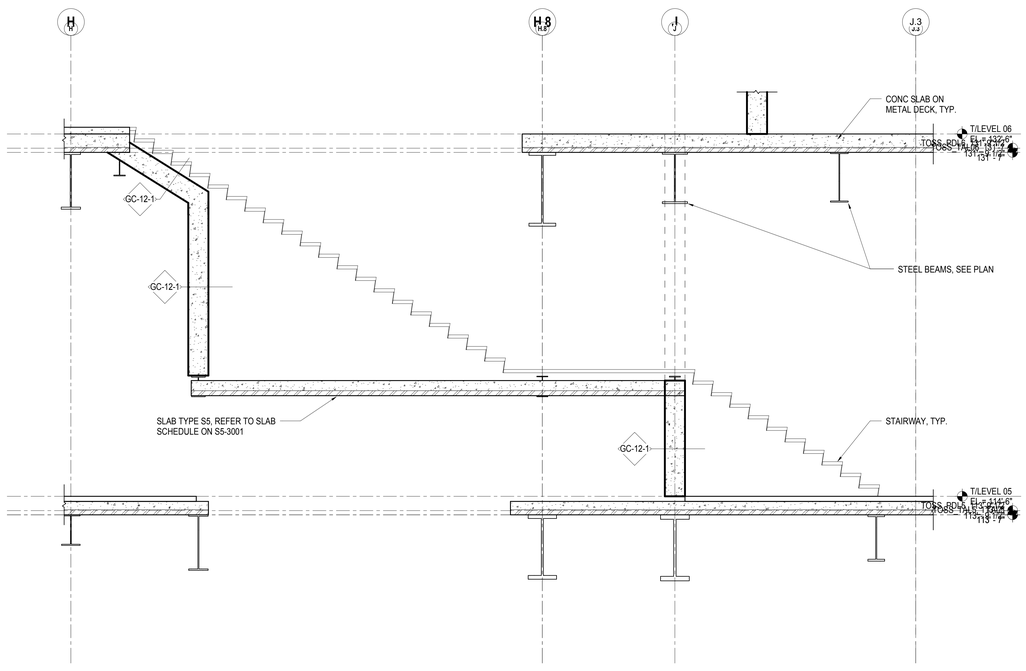

NOTE: SEE TYPICAL CONCRETE WALL DETAILS FOR INFORMATION NOT SHOWN.

8 SECTION
3/8" = 1'-0"

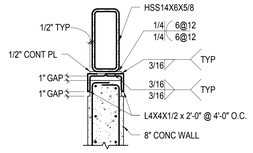

9 SECTION
1" = 1'-0"

HUDSON YARDS - RETAIL PODIUM AND TOWER A

500 WEST 33RD STREET
New York, NY

Client
Related Companies
60 Columbus Circle
New York, NY 10023
TEL: 212.801.1000 FAX: 212.801.1048

Oxford Properties Group
320 Park Avenue, 17th Floor
New York, NY 10022
TEL: 212.986.7514 FAX: 212.986.7510

Architect
Kohn Pedersen Fox Associates
11 West 42nd Street
New York, New York 10036
TEL: 212.977.6500 FAX: 212.956.2526

Structural Engineer
Thornton Tomasetti, Inc.
51 Madison Avenue
New York, New York 10010
TEL: 917.661.7800 FAX: 718.661.7801

Mechanical, Electrical, Plumbing, Fire Protection
Jaros Baum & Bolles Consulting Engineers
80 Pine Street
New York, NY 10013
TEL: 212.530.9300 FAX: 212.269.5894

Retail Interior Design & Planning
Elkus-Manfredi
300 A Street
Boston, MA 02210
TEL: 617.426.1300

No.	Description	Date
2	D.O.B. AMENDMENT #2	10/15/2016
1	D.O.B. BUILDING PERMIT FILING	12/10/2014

Key Plan

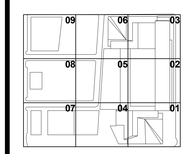

Issue Date: 12/10/2014
Project No. N11328.00
Drawn By Author
Sheet Number

HYE -TA -S8-3031
Drawing Title

STAIR D SECTIONS & DETAILS

Drawing Number
S8-3031
It-Scan Drawing Number
S-998.01

SHEET 432 OF 443

Damian Titus
Buildings
APPROVED
AMENDED APPLICATION
Date: 05/03/2017
NYC Development Hub

0 4' 8' 16'

N

© 2013 KOHN PEDERSEN FOX ASSOCIATES PC. All rights reserved.

S8-3031
10/20/2016 7:49:44 AM
STAIR D SECTIONS & DETAILS
P:\NY\Projects\N11328.000\Drawings\Structural\Record\Issues\2016-10-15 - D.O.B. Amendment No.2\Revit - Rev. Removed\HYTA_S8-series.rvt

DEPT OF BLDGS STR480925 Job Number
E00908537580 Scan Code

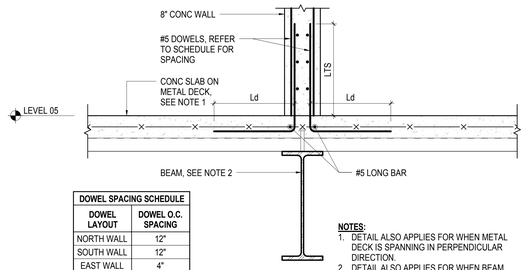

DOWEL SPACING SCHEDULE	
DOWEL LAYOUT	DOWEL O.C. SPACING
NORTH WALL	12"
SOUTH WALL	12"
EAST WALL	4"
WEST WALL	4"

NOTES:
1. DETAIL ALSO APPLIES FOR WHEN METAL DECK IS SPANNING IN PERPENDICULAR DIRECTION.
2. DETAIL ALSO APPLIES FOR WHEN BEAM IS NOT DIRECTLY BELOW WALL.

1 SECTION
1" = 1'-0"

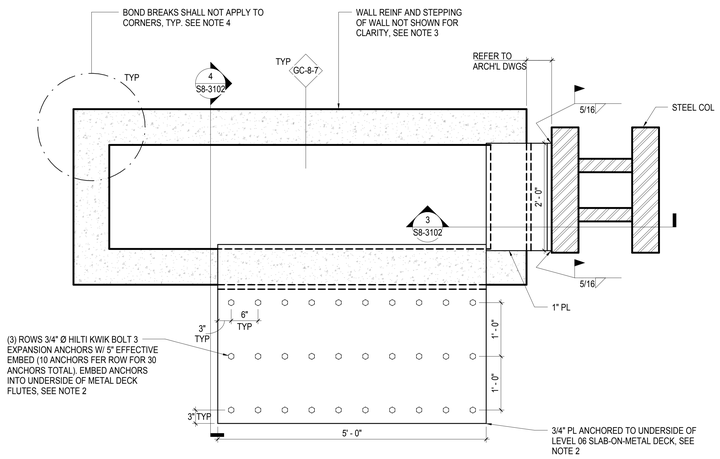

NOTES:
1. LEVEL 06 FRAMING NOT SHOWN FOR CLARITY.
2. LEVEL 06 SLAB-ON-METAL DECK FLUTES NOT SHOWN FOR CLARITY.
3. TOP OF CONCRETE WALL SHALL STEP AS REQ'D TO ACHIEVE 1" GAP BETWEEN UNDERSIDE OF SLAB AND BEAMS AND TO ACHIEVE THE ANCHORAGE CONFIGURATIONS SHOWN IN DETAILS 3 AND 4/S8-3102.
4. SEE DETAIL 7/S8-2002 FOR TYPICAL REINFORCEMENT ARRANGEMENT DETAILS WHEN BOND BREAKS ARE NOT APPLICABLE.

2 PLAN - HEAD ANCHORAGE DETAIL
1" = 1'-0"

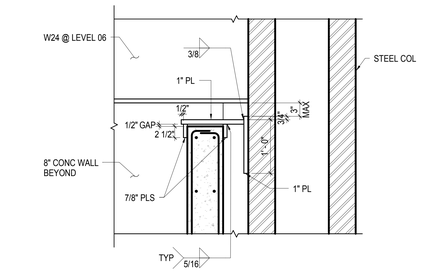

3 SECTION
1" = 1'-0"

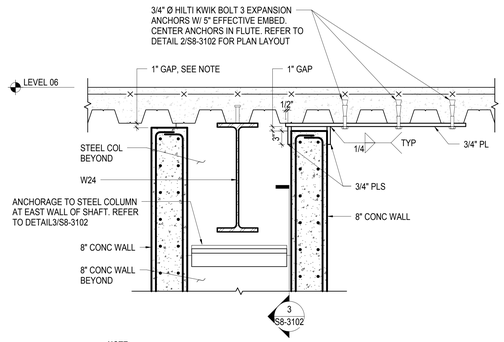

NOTE:
TOP OF CONCRETE WALL SHALL STEP AS REQ'D TO ACHIEVE 1" GAP BETWEEN UNDERSIDE OF SLAB AND BEAMS AND TO ACHIEVE THE ANCHORAGE CONFIGURATION SHOWN IN DETAILS 3 AND 4/S8-3102.

4 SECTION
1" = 1'-0"

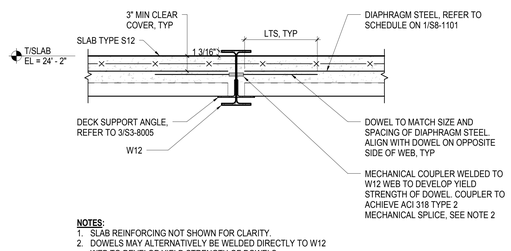

NOTES:
1. SLAB REINFORCING NOT SHOWN FOR CLARITY.
2. DOWELS MAY ALTERNATIVELY BE WELDED DIRECTLY TO W12 WEB TO DEVELOP YIELD STRENGTH OF DOWELS.
3. REFER TO S4 SERIES FOR TYPICAL COMPOSITE STEEL DECK ATTACHMENT DETAILS.

5 SECTION
1" = 1'-0"

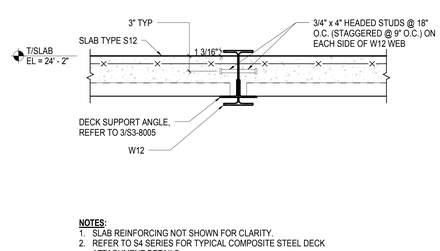

NOTES:
1. SLAB REINFORCING NOT SHOWN FOR CLARITY.
2. REFER TO S4 SERIES FOR TYPICAL COMPOSITE STEEL DECK ATTACHMENT DETAILS.

6 SECTION
1" = 1'-0"

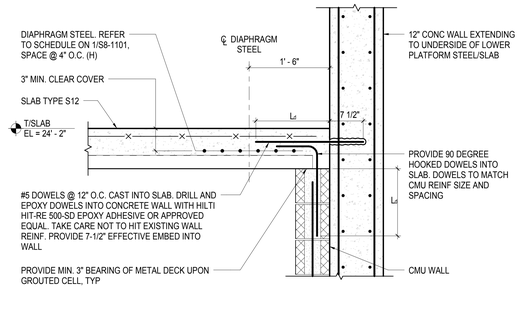

NOTES:
1. DETAIL ALSO APPLIES FOR WHEN METAL DECK IS ORIENTED PARALLEL TO WALL.
2. SLAB REINFORCING NOT SHOWN FOR CLARITY.
3. REFER TO DETAIL 4/S3-8005 FOR INFORMATION NOT SHOWN.

7 SECTION
1" = 1'-0"

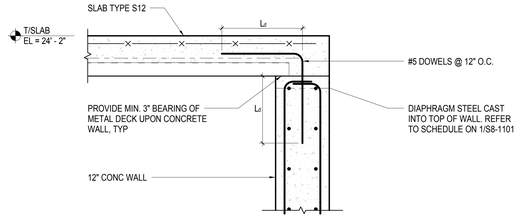

NOTES:
1. DETAIL ALSO APPLIES FOR WHEN METAL DECK IS ORIENTED PARALLEL TO WALL.
2. SLAB REINFORCING NOT SHOWN FOR CLARITY.

8 SECTION
1" = 1'-0"

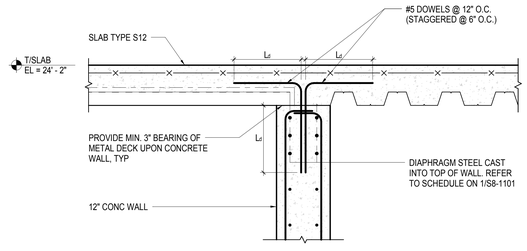

NOTES:
1. DETAIL ALSO APPLIES FOR WHEN METAL DECK IS ORIENTED PARALLEL TO WALL, OR WHEN BOTH SIDES OF METAL DECK ARE ORIENTED PERPENDICULAR TO WALL.
2. SLAB REINFORCING NOT SHOWN FOR CLARITY.

9 SECTION
1" = 1'-0"

HUDSON YARDS - RETAIL PODIUM AND TOWER A

500 WEST 33RD STREET
New York, NY

Client
Related Companies
60 Columbus Circle
New York, NY 10023
TEL: 212.801.1000 FAX: 212.801.1048

Oxford Properties Group
320 Park Avenue, 17th Floor
New York, NY 10022
TEL: 212.986.7514 FAX: 212.986.7510

Architect
Kohn Pedersen Fox Associates
11 West 42nd Street
New York, New York 10036
TEL: 212.977.6500 FAX: 212.956.2526

Structural Engineer
Thornton Tomasetti, Inc.
51 Madison Avenue
New York, New York 10010
TEL: 917.661.7800 FAX: 718.661.7801

Mechanical, Electrical, Plumbing, Fire Protection
Jaros Baum & Bolles Consulting Engineers
80 Pine Street
New York, NY 10013
TEL: 212.530.9300 FAX: 212.269.5894

Retail Interior Design & Planning
Elkus-Manfredi
300 A Street
Boston, MA 02210
TEL: 617.426.1300

No.	Description	Date
1	D.O.B. AMENDMENT #2	10/15/2016

Key Plan

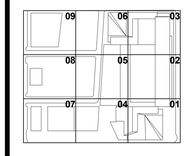

Issue Date: 10/15/2016
Project No. N11328.00
Drawn By: Author
Sheet Number

HYE -TA -S8-3102

Drawing Title

BUILDING OPERATIONS SECTIONS AND DETAILS

Drawing Number
S8-3102
B-Scan Drawing Number
S-999.00

Damian Titus
Buildings
APPROVED
Under Directive 2 of 1975
AMENDED APPLICATION
Date: 09/9/2017
NYC Development Hub

0 4' 8' 16'

© 2013 KOHN PEDERSEN FOX ASSOCIATES PC. All rights reserved.

S8-3102
10/20/2016 7:49:55 AM
BUILDING OPERATIONS SECTIONS AND DETAILS
P:\NY1\Projects\N11328.00\Drawings\Structural\Revit\Issued\2016-10-16 - D.O.B. Amendment No.2\Revit - Rev - Removed\HYTA_S8-series.rvt